April 15, 1969 S. RUBIN 3,438,606

SUPPORTING STRUCTURE FOR A CHAIR OR THE LIKE

Filed Dec. 1, 1966

Fig. 1.

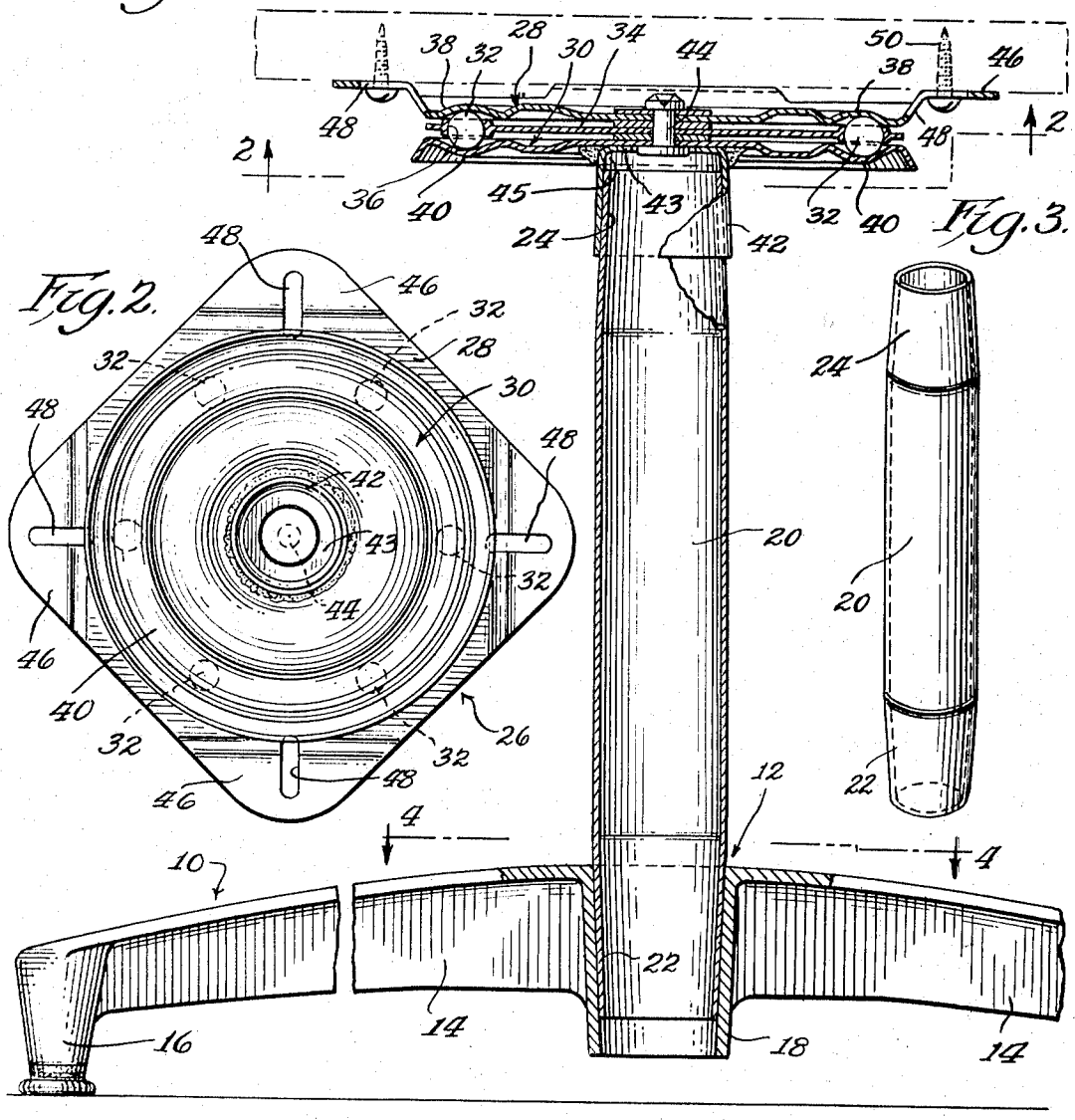

Fig. 3.

Fig. 2.

Fig. 4.

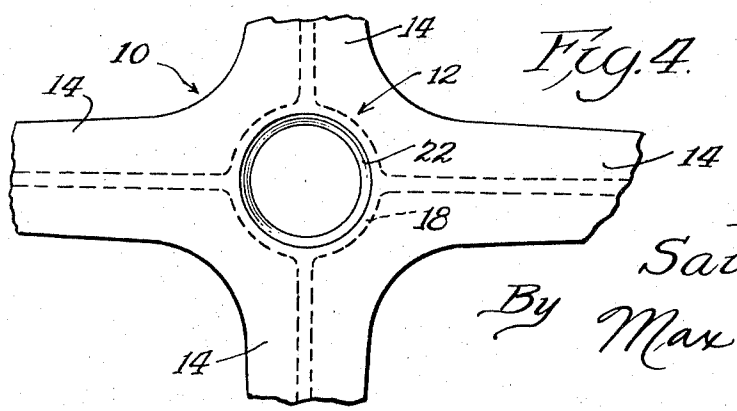

Inventor
Saul Rubin
By Max R. Kraus
Atty.

United States Patent Office 3,438,606 Patented Apr. 15, 1969

3,438,606

SUPPORTING STRUCTURE FOR A CHAIR OR THE LIKE

Saul Rubin, 758 S. Washtenaw Ave., Chicago, Ill. 60612

Filed Dec. 1, 1966, Ser. No. 598,271
Int. Cl. F16m 13/00
U.S. Cl. 248—415 1 Claim

ABSTRACT OF THE DISCLOSURE

A supporting structure for a chair which includes a column having its opposite ends provided with identical tapers so that either end of the column may frictionally engage the complementary tapered collar or cup-shaped member which is secured to the means attached to the seat of the chair and to the complementary tapered sleeve of the base so that there is no rotation between the column and the sleeve and the collar or cup-shaped member.

This invention relates to improvements in a supporting structure for a chair or the like.

One of the objects of this invention is to provide a support in which the column is frictionally interlocked with the means on the underside of the chair, as well as frictionally interlocked with the base, so that the column and base may be shipped and storaged in a knocked-down and disassembled relation to the seat portion of the chair, thereby reducing the overall height of the chair and permitting the use of smaller shipping cartons and a minimum of storage space.

Another object of this invention is to provide a tapered collar or cup-shaped member secured to the swivel unit so that the tapered collar or cup-shaped member becomes an integral part of the swivel unit, with the tapered collar or cup-shaped member forming a socket to frictionally receive and engage with the tapered end of a column.

Another object of this invention is to provide a structure in which the swivel unit and tapered collar or cup-shaped member forms one component, a column having its opposite ends tapered forms the second component, and a base with a tapered sleeve or socket forms the third component, whereby the three components may be shipped and stored in a knocked-down or disassembled condition and may be readily assembled in a friction-fit relationship so that they are in effect permanently interlocked, and with said interlocking there is no relative rotation between the tapered collar or cup-shaped member and column and the column and the base. With this invention there is a considerable savings in space and shipping charges.

In prior constructions it was customary to weld the column directly to the underplate of the swivel unit. In such cases the column would have to be treated for finishing after the welding as the welding would impair the finish of the column. With this invention the swivel unit and the tapered column may each be plated separately and when the two are interfitted by frictional engagement there is no impairment to the finish of the column.

Other objects will become apparent as this description progresses.

In the drawings:

FIGURE 1 is a central sectional view showing the invention;

FIGURE 2 is a plan view taken on line 2—2 of FIGURE 1;

FIGURE 3 is a perspective view of the column showing the tapered opposite ends; and

FIGURE 4 is a plan view taken on line 4—4 of FIGURE 1.

The supporting structure of the chair has a base member generally designated by the numeral **10**, formed generally of metal and having a central hub **12** with spaced radiating arms **14**, each of which terminates in a depending leg **16**. The central hub has a depending tapering sleeve **18**. A tubular post or column generally indicated at **20** is provided with a tapered end **22** at its lower end and a tapered end **24** at its upper end. The opposite tapered ends **22** and **24** are identical and either end may be inserted in the tapering sleeve **18** for frictional engagement therewith to support the column in an upright position. The taper of the end **22** of the column or post is complementary to the taper of the sleeve **18**. The tapered end **22** is inserted in the tapered sleeve **18** and by tapping the top of the column **20** with a hammer or the like will cause the column to form a frictional locking engagement in the sleeve **18** of the base so that the column and base are locked against relative rotation and against axial movement. However, if it should become necessary to separate them then tapping the base while holding the column will cause them to separate.

The supporting structure also includes a swivel unit generally designated by the numeral **26** which comprises a top plate **28**, an underplate **30**, ball bearings **32**, and an intermediate plate **34** having spaced openings **36** for retaining the ball bearings. The top and underplates are each shaped to provide raceways **38** and **40** respectively for the ball bearings **32**. A tapered sleeve or tapered collar **42** to form a cup-shaped member having an end wall **43** is fixedly secured to the swivel unit by a pin **44** having enlargements at its opposite ends. The three plates of the swivel unit are held together and joined to the tapered collar or cup-shaped member by means of the pin **44**, which also passes through an opening in the end wall **43** of the collar or cup-shaped member. The upper plate has a raised outer edge **46** provided with spaced openings **48** to receive screws **50** which secure the swivel unit to the underside of the seat portion of the chair. The swivel unit **26** and collar **42**, as well as the column **20** are all made of metal.

The tapered sleeve or collar or cup-shaped member **42** is adapted to receive the tapered end **24** of the column **20**. The taper of the collar or cup-shaped member **42** is complementary to the taper **24** and a frictional interlocking engagement is effected between the tapered end **24** and the tapered collar or cup-shaped member **42**. Tapping the swivel downwardly with a hammer or the like with respect to the column **20** will cause the frictional interlocking so that there will be no relative rotation or axial movement between the collar or cup-shaped member **42** and the column **20** when the frictional interlocking takes place. As will be seen in FIGURE 1, some space designated by the numeral **45** is provided between the upper end of the column and the end wall **43** of the collar or cup-shaped member. The weight of the person in the chair will cause the spacing distance to be reduced and further effect the interlocking engagement. Lifting the chair by the seat will not cause a separation between the column and the collar or cup-shaped member **42** or sleeve **18** of the base. The only way to separate the collar or cup-shaped member **42** from the column would be to hit the underside of the swivel unit upwardly while holding the column.

The tapered collar or cup-shaped member **42** becomes an integral part of the swivel unit **26** and the swivel unit is rotatable with respect to the collar. The swivel unit **26** with the collar is one component and may be shipped with the base **10** and column **20** in disassembled relation and readily assembled at the place of use. With the swivel unit **26** and tapered collar **42** secured to the seat of the chair, the lower edge of the collar determines the height

of the chair when the base and column are not in interlocking engagement, instead of the height extending to the base as heretofore. Thus, chairs may be crated and shipped in much smaller containers than heretofore used, and the user merely inserts the column **20** in the collar **42** and in the base **10** to effect the interlocking without requiring any tools other than a hammer for the tapping.

If desired, the tapered collar or cup-shaped member **42** may be welded to the underplate **30** of the swivel unit so as to form an integral part thereof, and a pin similar to pin **44** may be used to connect the three plates of the swivel unit, permitting the top plate **28** and intermediate plate **34** to rotate relative to the stationary underplate **30**.

It will be understood that various changes and modifications may be made from the foregoing without departing from the spirit and scope of the appended claim.

I claim:

1. A supporting structure for a chair comprising: a base having a tapered sleeve, swivel means adapted to be secured to a seat portion of the chair, said swivel means including ball bearings positioned between a pair of plate members, a tapered cup-shaped member having a closed end and an open end, said swivel means secured to said closed end with the open end of the cup-shaped member facing inwardly, the taper on said sleeve and said cup-shaped member being identical, a column having its opposite ends identically tapered and complementary to the taper of the sleeve and cup-shaped member to permit either of the opposite ends of the column to frictionally engage the sleeve and cup-shaped member so that there is no rotation between the column and said sleeve and said cup-shaped member.

References Cited

UNITED STATES PATENTS

361,119	4/1887	Besly	248—159
1,425,582	8/1922	Feigler	108—150
1,463,217	7/1923	Kristofek	248—158

FRANCIS K. ZUGEL, *Primary Examiner.*

U.S. Cl. X.R.

108—150