F. A. OST.

COMBUSTION ENGINE.

APPLICATION FILED MAR. 10, 1915.

1,167,313.

Patented Jan. 4, 1916.

3 SHEETS—SHEET 1.

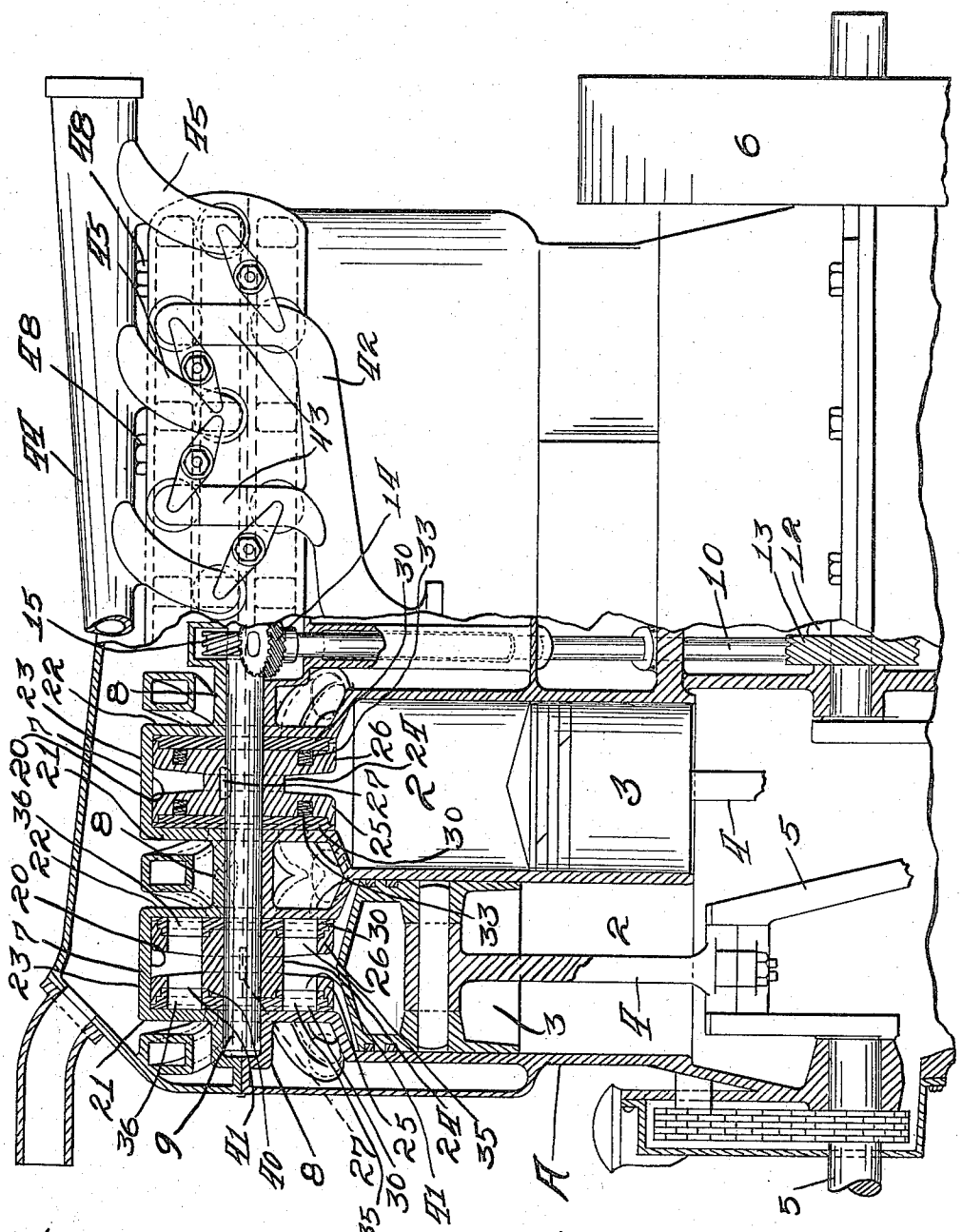

Witnesses:
L. M. Johnes.
Stella L. Waschenbergen

Fig. 1.

Inventor:
Frederick A Ost.
by: J. Bradbury
Attorney.

COLUMBIA PLANOGRAPH CO., WASHINGTON, D. C.

F. A. OST.

COMBUSTION ENGINE.

APPLICATION FILED MAR. 10, 1915.

1,167,313.

Patented Jan. 4, 1916.

3 SHEETS—SHEET 2.

Fig. 2.

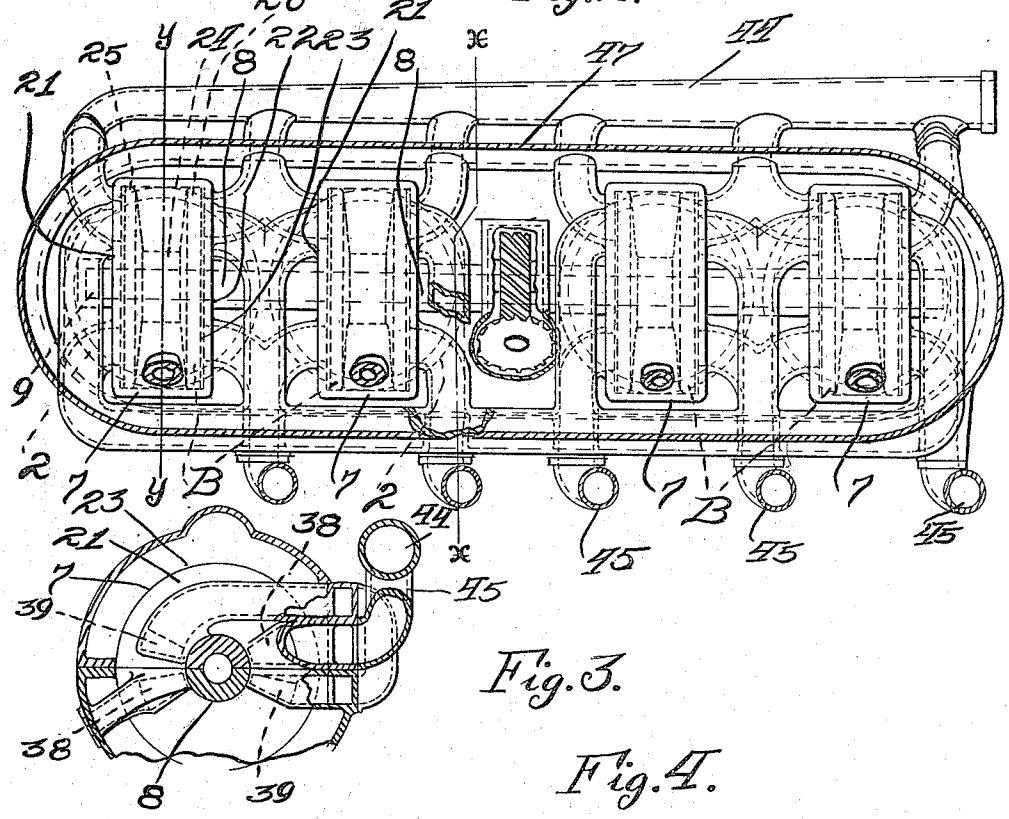

Fig. 3.

Fig. 4.

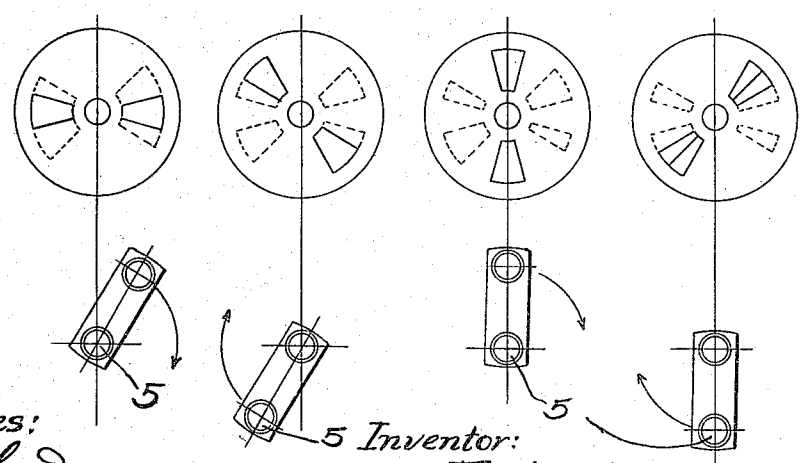

Witnesses:
R. M. Schmid.
Stella L. Waschenbergen

Inventor:
Frederick A Ost
by: J. Bradbury
Attorney.

COLUMBIA PLANOGRAPH CO., WASHINGTON, D. C.

F. A. OST.

COMBUSTION ENGINE.

APPLICATION FILED MAR. 10, 1915.

1,167,313.

Patented Jan. 4, 1916.

3 SHEETS—SHEET 3.

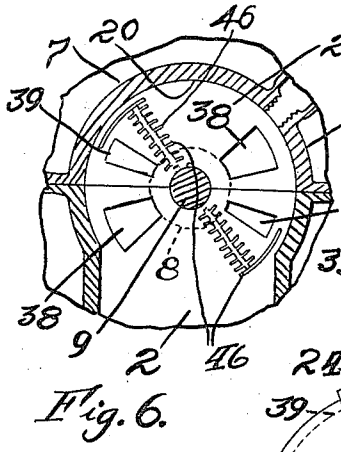

Fig. 6.

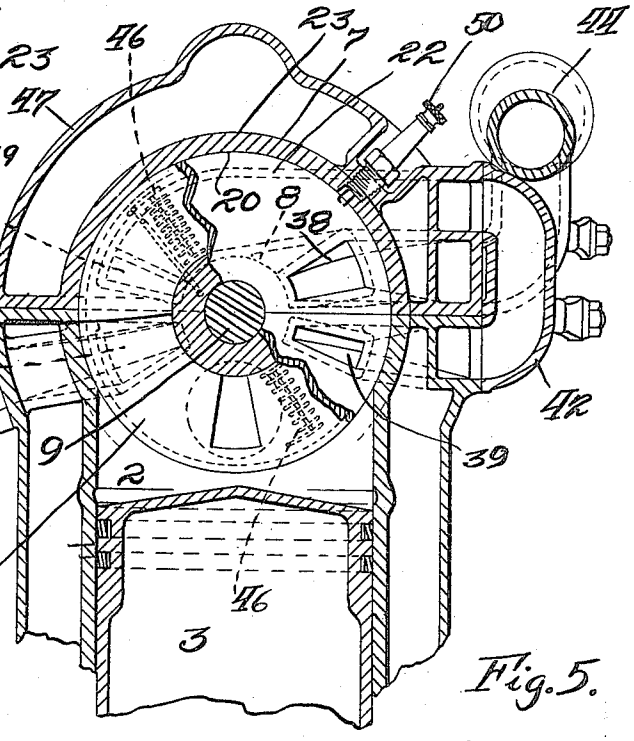

Fig. 5.

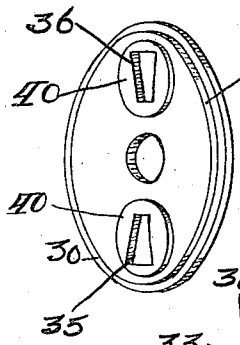

Fig. 9.

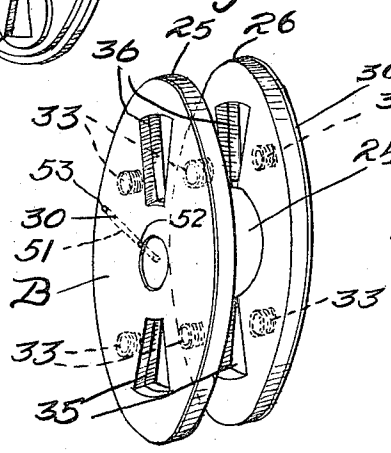

Fig. 7.

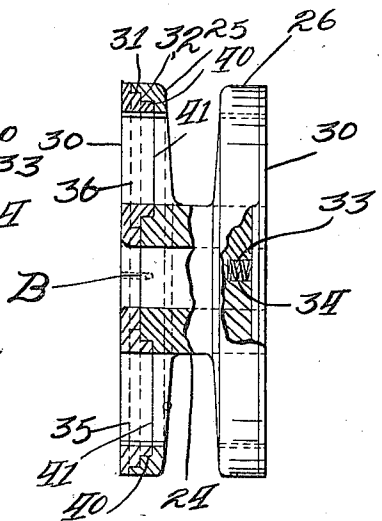

Fig. 8.

Witnesses:

P. M. Bohmer,

Stella L. Haschenburger

Inventor:

Frederick A. Ost.

by: F. Bradbury

Attorney.

COLUMBIA PLANOGRAPH CO., WASHINGTON, D. C.

UNITED STATES PATENT OFFICE.

FREDERICK A. OST, OF MINNEAPOLIS, MINNESOTA, ASSIGNOR TO ANDREW D. O'BRIEN, OF GRACEVILLE, MINNESOTA.

COMBUSTION-ENGINE.

1,167,313. Specification of Letters Patent. Patented Jan. 4, 1916.

Application filed March 10, 1915. Serial No. 13,363.

To all whom it may concern:

Be it known that I, FREDERICK A. OST, a citizen of the United States, residing at Minneapolis, in the county of Hennepin and State of Minnesota, have invented a new and useful Improvement in Combustion-Engines, of which the following is a specification.

My invention relates to improvements in engines, particularly, although not exclusively of internal combustion type and pertains more particularly to the valve mechanism through which the mixture charge or other power impelling medium is admitted into the combustion or power medium chamber and the spent power medium is exhausted. This improved valve mechanism for controlling the inlet of fuel mixture and the exhaust of spent gases is adapted principally, although not exclusively to four cycle types of engines, either of single or multiple cylinder construction, slight modification adapting the invention to two cycle operation. Said mechanism is also of that type in which a rotary valve is seated in the valve chamber and adapted to coöperate with the inlet and exhaust ports in the walls of the latter.

Among the primary objects of the present invention is to provide an improved and more efficient construction and arrangement of valve mechanism, whereby pressure against the valve is distributed evenly to reduce friction and relieve strain, a maximum amount of port opening is produced in a short space of time and the port openings are quickly closed after the charge of fuel is admitted into the cylinder to increase the efficiency of operation of the engine.

Further objects are to provide improved means for lubricating the valve mechanism and to prevent leaking.

To these ends, I have produced a valve in the valve chamber having a pair of ends spaced apart and extending laterally from a common axis, each of said ends being formed with a pair of substantially oppositely disposed ports therethrough, which register successively with pairs of ducts in the sides of the valve chamber to admit the charge of fuel and exhaust spent gases in the shortest space of time, thus producing a structure which is strong, durable, easily cooled and lubricated, and which very quickly receives and expels gases and will resist warping, all of which features develop greater economy of fuel, better compression of the fuel mixture in the combustion chamber, a higher amount of power from the combustion of fuel, and higher speed than with types formerly employed.

In the accompanying drawings forming part of this specification, Figure 1 is a side elevation partly in central section, of a multiple cylinder engine showing my invention applied thereto; Fig. 2 is a plan of the construction illustrated in Fig. 1, part of the casing being broken away and in section to expose the interior construction; Fig. 3 is a detail in section taken upon the line X—X of Fig. 2; Fig. 4 is a diagram illustrating four positions which the valve mechanism is adapted to assume during one and one-half revolutions of the crank shaft of the engine; Fig. 5 is a section of a detail taken centrally through one of the cylinders on the line Y—Y of Fig. 2; Fig. 6 is a detail in section taken centrally through one of the valve casings when the valve is removed looking toward one side of the casing; Fig. 7 is a perspective of one of the valves; Fig. 8 is an elevation of one of the valves partly in section, and Fig. 9 is a perspective of one of the packing elements removed from the valve.

In the drawings, I have illustrated my invention applied to a four cylinder engine of internal combustion type, it being obvious, however, that the invention can be employed with an engine having one cylinder or any number of cylinders, and of the two cycle type, or operated by gas, steam or other impelling medium.

A represents a casing, which is formed with a plurality of vertical cylinders 2, in each of which is a piston 3 connected by a pitman 4 to the crank shaft 5, which is journaled in the frame in the usual manner. Mounted upon this crank shaft is the usual fly wheel 6 and located at the upper end of each cylinder is a valve casing 7, containing my improved valve B, which as illustrated resembles a spool. The portions of this casing in which each of the valves B is arranged are formed with hubs 8, in which a valve shaft 9 common to all of the valves is journaled. The valve shaft 9 is revolved at suitable speed, such as one revolution for every four revolutions of the crank shaft 5 when the engine is arranged for four cycle operation, by means of a countershaft 10,

which is journaled in the bearings 11 on the frame A. The lower end of the shaft 10 is connected with the shaft 5 to be revolved by means of intermeshing worm gears 12 and 13, the latter being mounted upon the shaft 5 and the former on the shaft 10, and the upper end of the shaft 10 is connected with the shaft 9 to revolve it, by means of intermeshing worm gears 14 and 15, the latter being incased in a portion of the centrally disposed hub 8, in which the shaft 9 is journaled.

The valve casing for each cylinder is defined by end walls 21 and 22 and a side wall 23, said side wall having an inner cylindrical surface 20, which is arranged co-axial to the shaft 9. Arranged within the valve chamber, which is thus produced and mounted upon the shaft 9 is my improved valve B, which is formed with a longitudinal core 24 over the shaft 9, and with two opposite end elements 25 and 26, said core being secured to the shaft 9 by means of a key 27, thus causing the end elements to rotate with the shaft. Each of the ends 25 and 26 is provided with a packing element 30, the two packing elements on the two ends of the valve being similar in construction, and each consisting of a disk plate having shoulders such as 31 in its periphery which fit into annular notches or steps 32, said notches or steps being formed in the rim portion of the end of the valve. The shoulders thus assist in forming a gas tight connection between the outer end face of the valve and the adjacent end wall of the valve chamber, the abutting surfaces being preferably a ground fit. The packing elements 30 are thrust outwardly from the ends of the valve with their end faces against the ends of the valve chamber by means of compression springs 33, which are seated in recesses 34 in the ends 25 and 26 of the valve, said springs being distributed evenly to cause the packing plates to press closely against the inner faces of the valve chamber.

Located in each end of each valve in diametrically opposite positions from the axis of the valve are two passages 35 and 36, extending through the packing elements and end walls of the valve and forming openings for conducting fuel mixture and exhausting spent gases into and out of the cylinder. The passages in one end of the valve are disposed longitudinally in alinement with similar passages in the opposite end of the valve, there being four passages in every valve, which are adapted to register simultaneously with four corresponding ducts 38 in the end walls 21 and 22, of each valve chamber. The ducts in each end wall of the valve chamber, however, vary in width, the ducts 39 being narrower than the remaining ducts and forming ingress ducts for fuel mixture into the cylinder, while the remaining ducts are adapted for the exhaust of spent gases. By making the exhaust ducts wider in the end walls of the valve chamber, they are adapted to remain open for a longer period than the ingress ducts during the exhaust stroke of the piston. The packing elements are each formed with inwardly projecting bosses 40, through which the passages 35 and 36 extend, said bosses being seated in corresponding depressions 41 in the end walls of the valve, thereby assisting in forming gas tight connections between the packing elements and the valve.

It will be noted that the ducts in the end walls of the valve chamber constituting the ingress ducts and the ducts constituting the exhaust ducts are diametrically opposite, so as to correspond simultaneously with the passages in the valve. The positioning of the ducts in an end wall of a valve chamber is longitudinally opposite the ducts in the opposite end wall, resulting in all of the passages in the valve registering simultaneously, either with all of the ingress or all of the egress ducts in the corresponding valve chamber. The sets of ducts in the valve chambers of all of the cylinders of the engine and of the valves on the shaft, are advanced in position around the shaft so as to time the opening and closing of the ducts and cause the pistons to operate in synchronism, successively, thus causing the cylinder and their pistons to deliver an even succession of impulses during every revolution of the shaft 5, in the accustomed manner. The setting of the valves and the position of the valve ports in the valve chambers at different points of revolution of the crank shaft is illustrated by the four positions shown in Fig. 4, diagrammatically. The valve chambers of the engine are provided with a fuel manifold 42 which has branches 43 connected with all of the ingress ducts of the valve chambers and with a pair of exhaust manifolds 44 having branches 45 connected with all of the exhaust ducts of said chambers, causing air and fuel mixture to be admitted into the valve chambers, and the spent gases to be exhausted through proper passageways, which are provided for that purpose.

An engine either of single or multiple cylinder type constructed in accordance with my invention is adapted to operate either at high or low speed with little or no vibration, and with a minimum amount of fuel. The ingress valve openings of large area being occasioned to open and close to the widest extent in the shortest period of time, thereby admit the full charge of fuel into the combustion chamber, almost instantly, and retain said charge until fired, the engine thus utilizing all of the power of the burning fuel, until the end of the power stroke of the piston is reached, whereupon the exhaust

valves of large area are fully opened to the widest extent, relieving the spent gases substantially instantly.

The surfaces of the valves, which bear upon the valve chamber walls are lubricated partly by the lubricating medium which is admitted into the cylinder and by oil which is fed along the shaft 9 and through the lubricating ducts 51 and 46 respectively, in the end walls of the valve chambers, and leading from an end plate 30 and from a port opening 52 outwardly to an outlet 53. The oil is thus fed between the packing plate and end walls 25 or 26 and finally passes into the system of ducts 46 terminating in branched grooves which distribute the lubricating medium over a large surface, thus effectively lubricating the surfaces between the packing plates and valve chamber walls. The medium is conducted from the shaft outwardly by centrifugal force and the suction of the intake stroke thus maintaining a positive feed. The particular design of distribution shown prevents carbonization of the oil and stopping of the passages. The passages in the valve chamber walls are open on the intake and compression strokes of the pistons but are closed during firing and exhaust strokes. It will be understood that the ducts and distributing passages for lubricating oil are employed on both ends of the valve parts and valve chamber walls. The water jacket 47 is shown extending from the cylinders over the valve casings for cooling purposes in the usual manner. The casing forming the valve chambers and water jacket is shown parted in the center, the parts being detachably secured by bolt 48 so that one-half can easily be removed from the cylinders. It will be understood that spark plugs 50 positioned in the walls of the valve chambers are employed in the usual manner.

In accordance with the patent statutes I have described the principles of operation of my invention, together with the apparatus which I now consider to represent the best embodiment thereof, but I desire to have it understood that the construction shown is only illustrative and that the invention can be carried out by other means and applied to uses other than those above set forth within the scope of the following claims.

Having described my invention, what I claim as new and desire to protect by Letters Patent is:—

1. An engine of the class set forth, comprising, in combination, a cylinder forming an explosion chamber having a head forming a valve chamber, said head being provided with a pair of opposite side walls, each side wall being formed with a pair of ingress and a pair of egress ducts, a piston reciprocable in said cylinder, a crank shaft to which said piston is connected, a valve in said valve chamber having a longitudinal core and a pair of ends extending laterally from the ends of said core, each of said ends being formed with a pair of substantially oppositely disposed passages therethrough, said valve being journaled in said valve chamber on an axis passing longitudinally through said core and said passages in said ends being adapted to register successively with the pairs of ducts in the sides of said valve chamber to admit a fuel charge or exhaust spent gases and means for revolving said valve in synchronism with the reciprocation of said piston.

2. A combustion engine, comprising, in combination, a cylinder forming a combustion chamber, having a valve chamber provided with a pair of opposite sides, each of said sides being formed with a pair of ingress and a pair of egress ducts for the admission of a fuel charge and the exhaust of spent gases, a valve having a core and a pair of opposite ends extending laterally from said core, each of said ends being formed with a pair of passages adapted to register successively with the pairs of ingress and exhaust ducts in a wall of said valve chamber, said valve being journaled in said valve chamber on an axis passing longitudinally through said core and the passages through the ends of said valve being so positioned that they register simultaneously first with all of the ingress ducts in both of said walls of said valve chamber and then with all of the exhaust ducts in said walls and means for revolving said valve in synchronism with the movement of said piston.

3. In an engine having a piston and cylinder forming a combustion chamber, a valve revolubly mounted in connection with said combustion chamber consisting of a hub portion and a pair of opposite ends extending laterally from said hub portion, each of said ends being ported for the simultaneous admission of fuel through both of said ends into said chamber, means for revolving said valve with its ports in synchronism with the movement between said cylinder and piston.

4. An engine, comprising, in combination, a cylinder having a valve chamber formed with a pair of opposite end walls, each end wall being provided with a pair of ingress and a pair of egress ducts, a piston reciprocable in said cylinder, a crank shaft to which said piston is connected, a valve in said valve chamber having a pair of end elements revoluble about an axis, each of said end elements being formed with a pair of substantially oppositely disposed passages therethrough, said valve being journaled in said valve casing upon said axis and said passages being

adapted to register successively with the pairs of ducts in the sides of said chamber to admit a charge of fuel or exhaust spent gases and means for revolving said valve in synchronism with the reciprocation of said piston.

5. An engine, comprising, in combination, a cylinder having a valve chamber formed with a pair of opposite end walls, each end wall being provided with a pair of ingress and a pair of egress ducts, a piston reciprocable in said cylinder, a valve in said valve chamber having a pair of end elements spaced apart and revoluble upon a single axis, each of said end elements being formed with a pair of substantially oppositely disposed passages therethrough and said valve being journaled in said valve chamber on said axis with said passages adapted to register successively with the pairs of ducts in the sides of said valve chamber to admit a fuel charge or exhaust spent gases and means for revolving said valve in synchronism with the motion between said piston and cylinder.

6. An engine, comprising, in combination, a cylinder and piston in co-active connection having a valve chamber associated therewith provided with a pair of opposite end walls, each of said end walls being formed with a pair of ingress and a pair of egress ducts for the admission of power medium and the exhaust of spent power medium, a valve consisting of a pair of opposite end members spaced apart and journaled on a single axis in said valve chamber, each of said end members being formed with a pair of passages adapted to register successively with the pairs of ingress and exhaust ducts in a wall of said valve chamber, the passages in said valve being so positioned as to register first with all of the ingress ducts in both of said walls of said valve chamber and then with all of the exhaust ducts in said walls and means for revolving said valve in synchronism with the movement between said piston and cylinder.

7. An engine of the class set forth, comprising, in combination, a cylinder and piston in co-active connection having a valve chamber associated therewith, provided with a pair of opposite side walls, each side wall being formed with a pair of ingress and a pair of egress ducts, a valve in said chamber having a pair of end elements spaced apart and arranged to revolve on a single axis in said chamber, each of said end elements being formed with a pair of passages adapted to register successively with the pairs of ingress and exhaust ducts in a wall of said chamber, a packing plate seated freely on the outer surface of each of said end elements of said valve, springs interposed between the end elements of said valve and said packing elements to urge said packing elements with their faces tightly against the end walls of said valve chamber and means for revolving said valve in synchronism with the movement between said piston and cylinder, whereby the passages through the end elements of said valve are adapted to register simultaneously with all of said ingress ducts and then with all of the exhaust ducts in the walls of said valve chamber.

8. An engine of the class set forth, comprising, in combination, a cylinder and piston in co-active connection having a valve chamber associated therewith, provided with a pair of opposite side walls, each side wall being formed with a pair of ingress and a pair of egress ducts, a valve in said chamber having a pair of end elements spaced apart and arranged to revolve on a single axis in said chamber, each of said end elements being formed with a pair of passages adapted to register successively with the pairs of ingress and exhaust ducts in a wall of said chamber, a packing plate seated freely on the outer surface of each of said end elements of said valve, springs interposed between the end elements of said valve and said packing elements to urge said packing elements with their faces tightly against the end walls of said valve chamber, means for revolving said valve in synchronism with the movement between said piston and cylinder, whereby the passages through the end elements of said valve are adapted to register simultaneously with all of said ingress ducts and then with all of the exhaust ducts in the walls of said valve chamber and distributing ducts in the end walls of said valve chamber and in the parts of the valve for supplying lubricating medium between the surfaces of the valve parts and the walls of said valve chamber.

In testimony whereof, I have signed my name to this specification in the presence of two subscribing witnesses.

FREDERICK A. OST.

Witnesses:
STELLA L. WASCHENBERGER,
F. G. BRADBURY.

Copies of this patent may be obtained for five cents each, by addressing the "Commissioner of Patents, Washington, D. C."