US 20060106305A1

(19) United States

(12) Patent Application Publication (10) Pub. No.: US 2006/0106305 A1

Lau (43) Pub. Date: May 18, 2006

(54) HEART VALVE LEAFLET LOCATOR

(76) Inventor: **Jan Lau**, Windsor, CA (US)

Correspondence Address:
EDWARDS LIFESCIENCES CORPORATION
LEGAL DEPARTMENT
ONE EDWARDS WAY
IRVINE, CA 92614 (US)

(21) Appl. No.: **11/317,955**

(22) Filed: **Dec. 22, 2005**

Related U.S. Application Data

(62) Division of application No. 10/688,712, filed on Oct. 17, 2003, now Pat. No. 7,004,176.

Publication Classification

(51) **Int. Cl.**
A61B 6/00 (2006.01)

(52) **U.S. Cl.** **600/431**; 623/2.11

(57) **ABSTRACT**

Disclosed are methods and devices for determining valve leaflet orientation. A catheter is provided with a conformable, radiopaque target. The target is deployed within a valve, such as the mitral valve. The conformable target conforms to the coaptation axis in response to closing of the valve leaflets. That coaptation axis may then be visualized, and utilized to determine information about valve operation, or to assist in placement of devices in the vicinity of the valve.

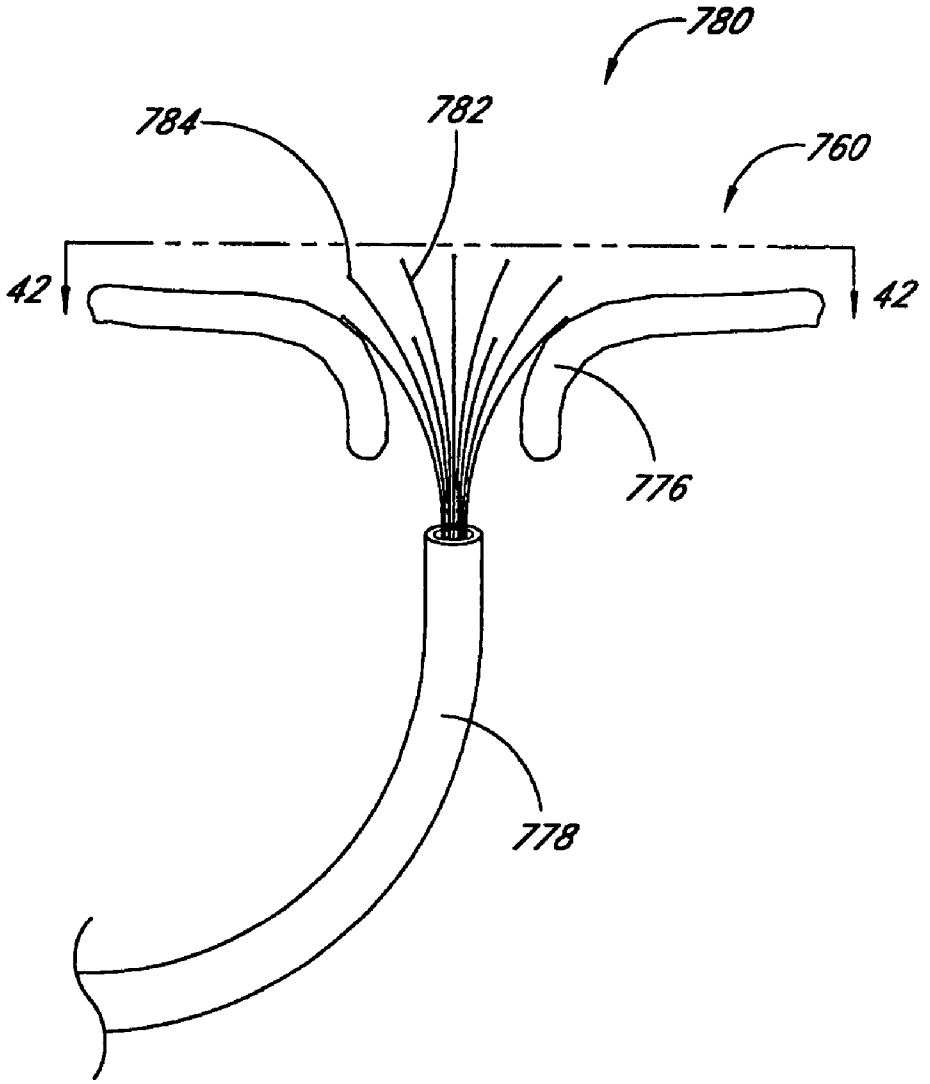

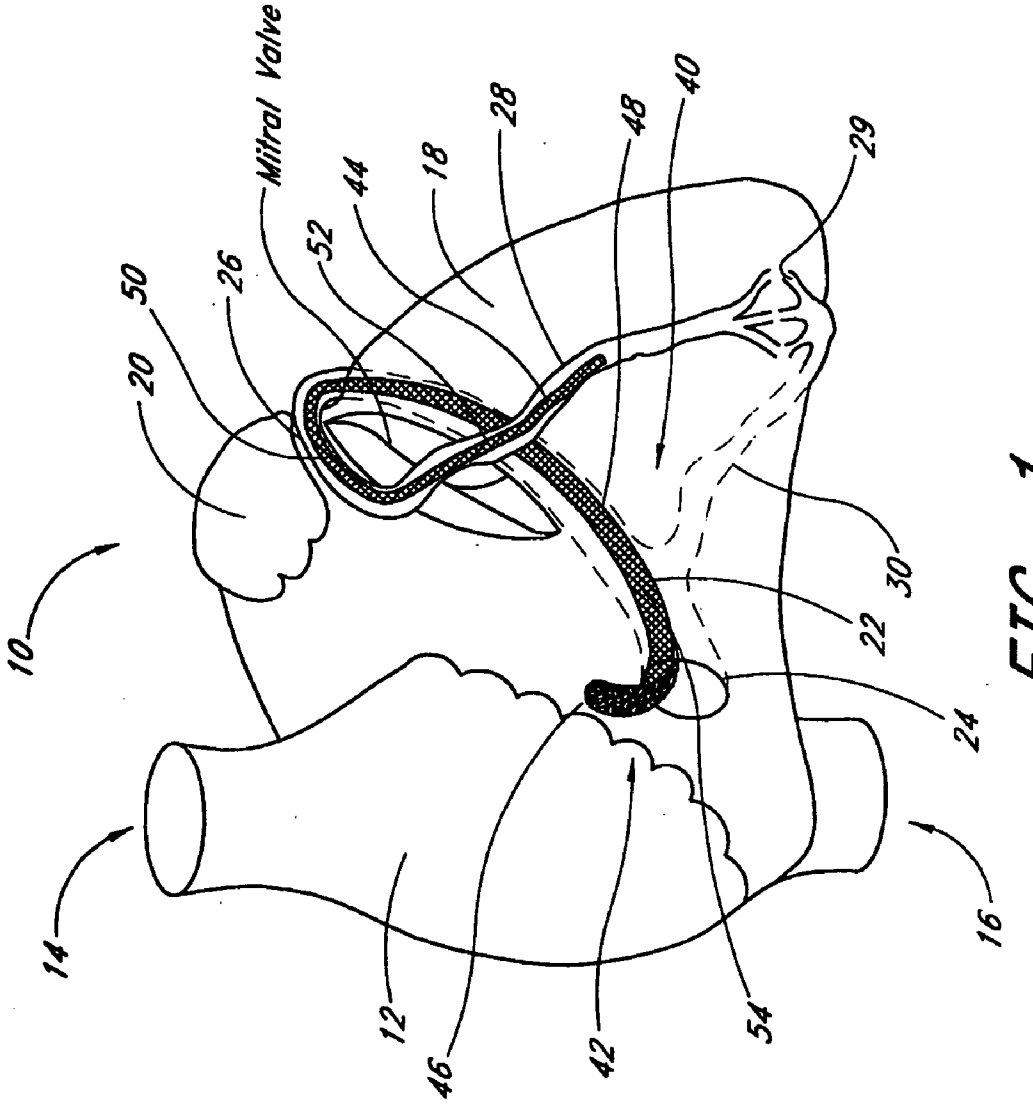
Mitral Valve
10
12
14
16
18
20
22
24
26
28
29
30
40
42
44
46
48
50
52
54

FIG. 1

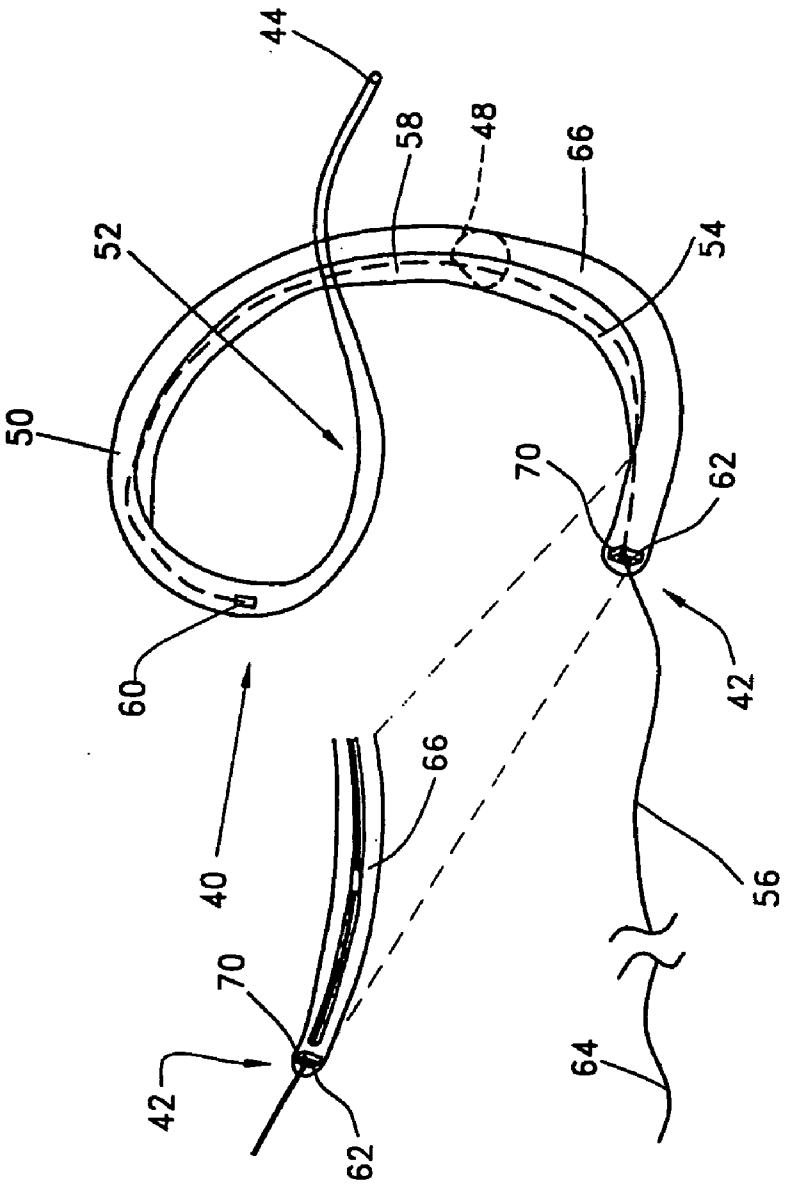

FIG. 2A

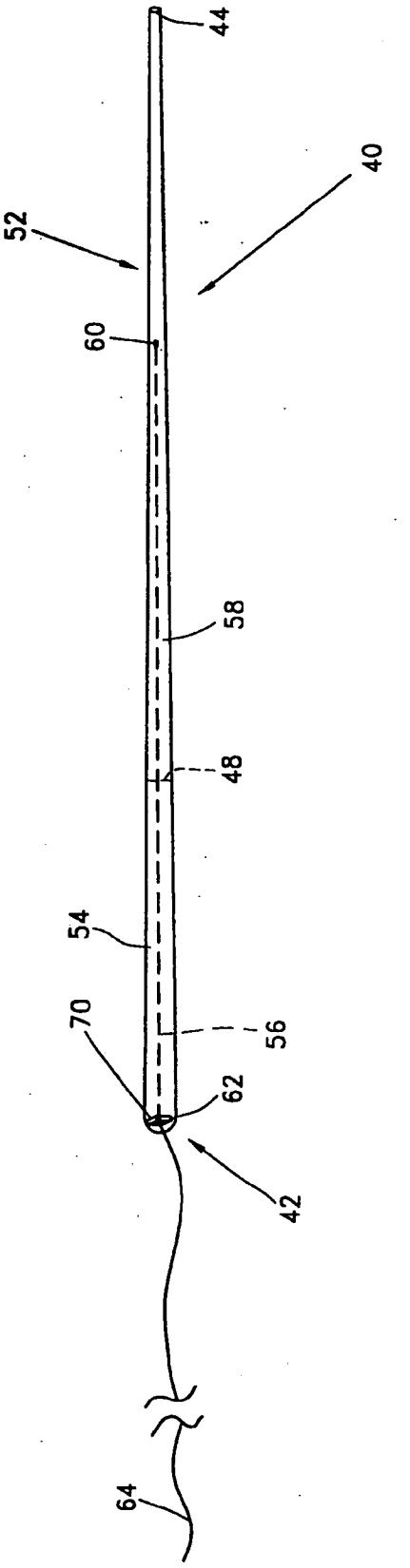

FIG. 2B

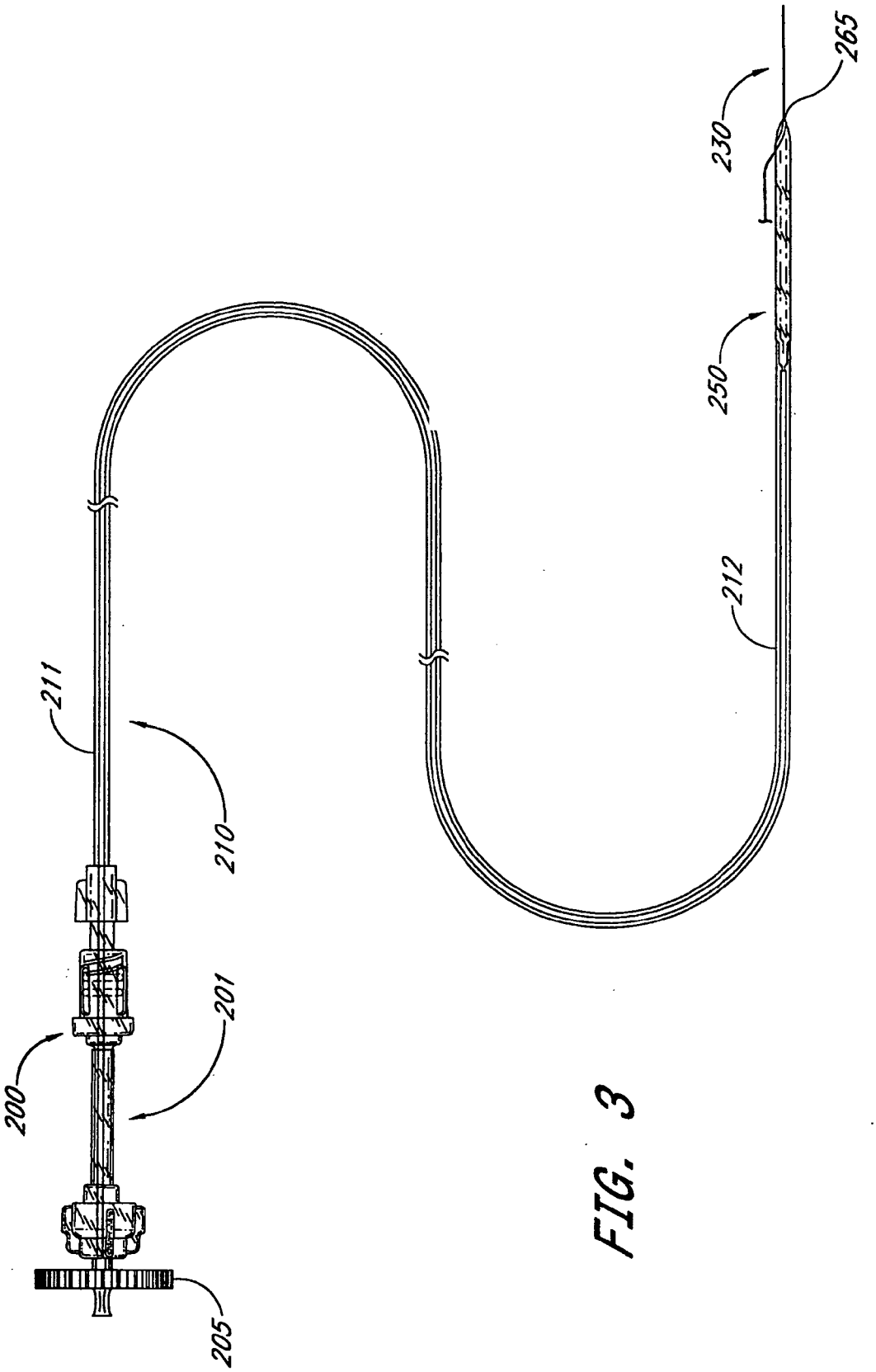

FIG. 3

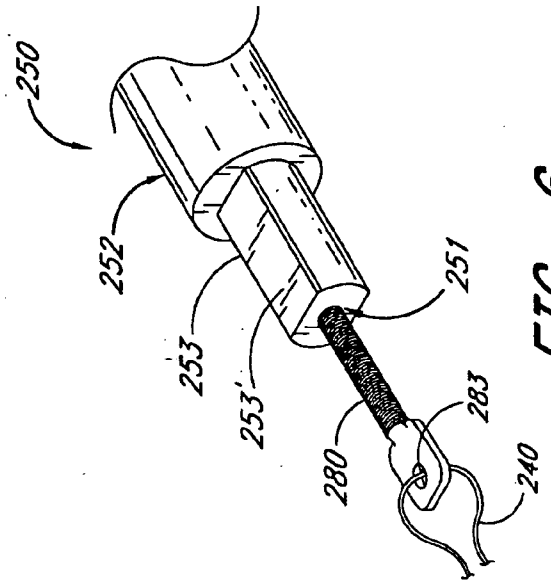

FIG. 6

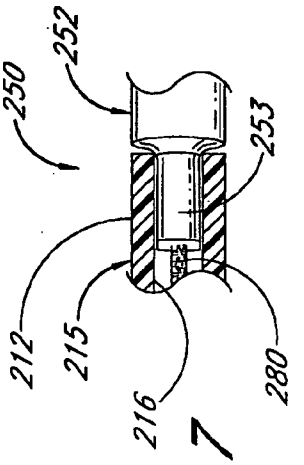

FIG. 7

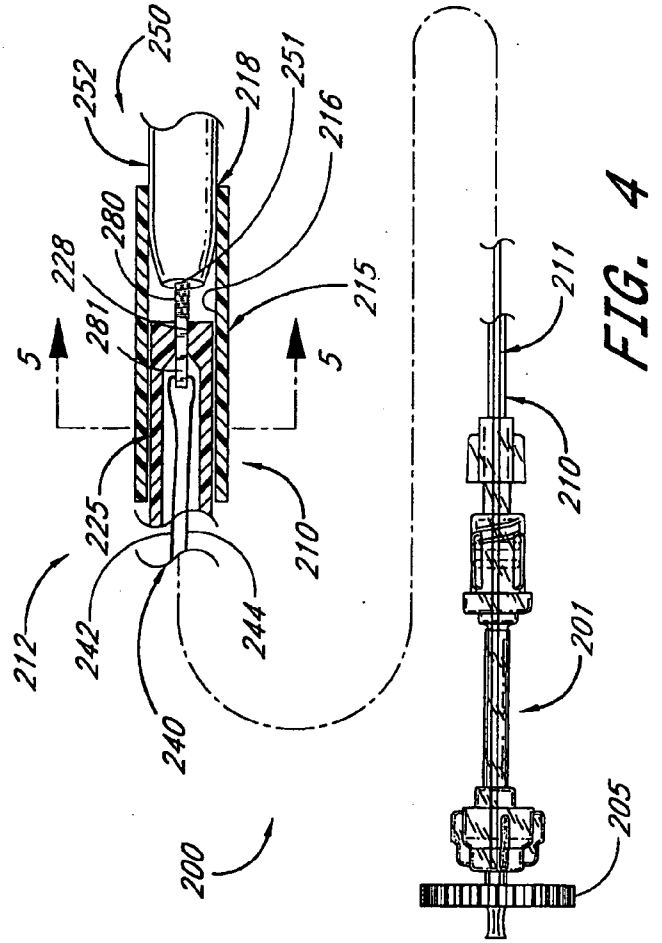

FIG. 4

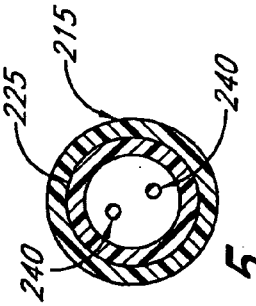

FIG. 5

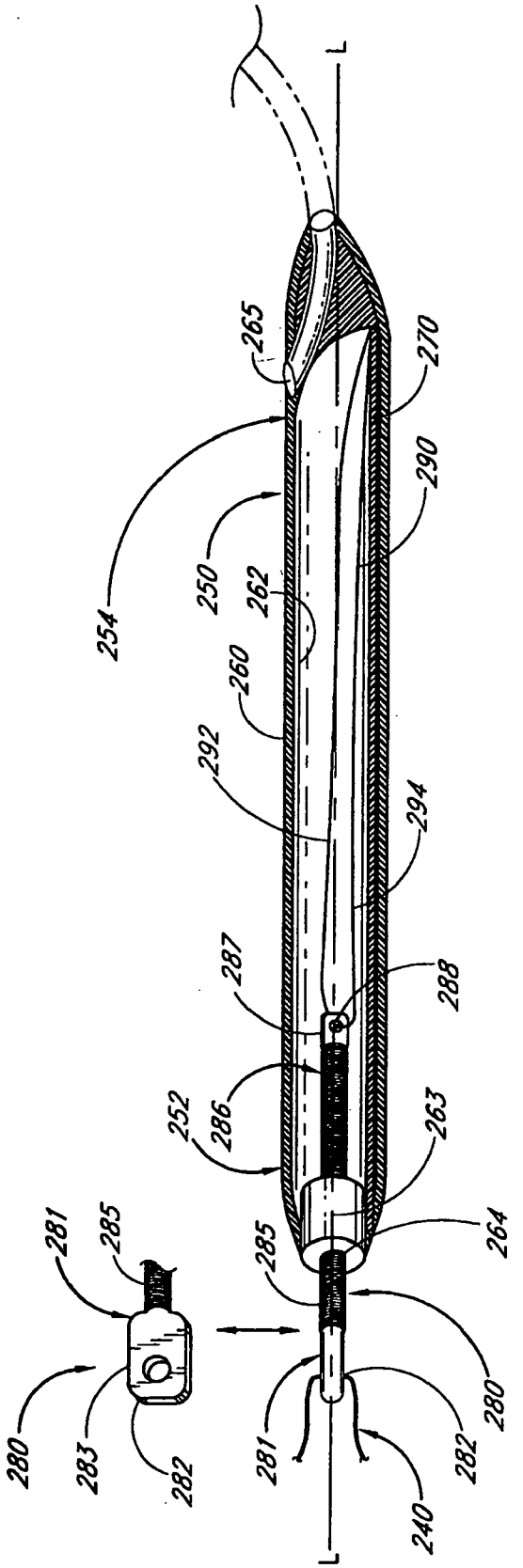
L
265
270
290
254
250
262
260
292
294
287
288
252
286
263
264
285
281
285
280
283
282
281
282
280
240
L

FIG. 8A

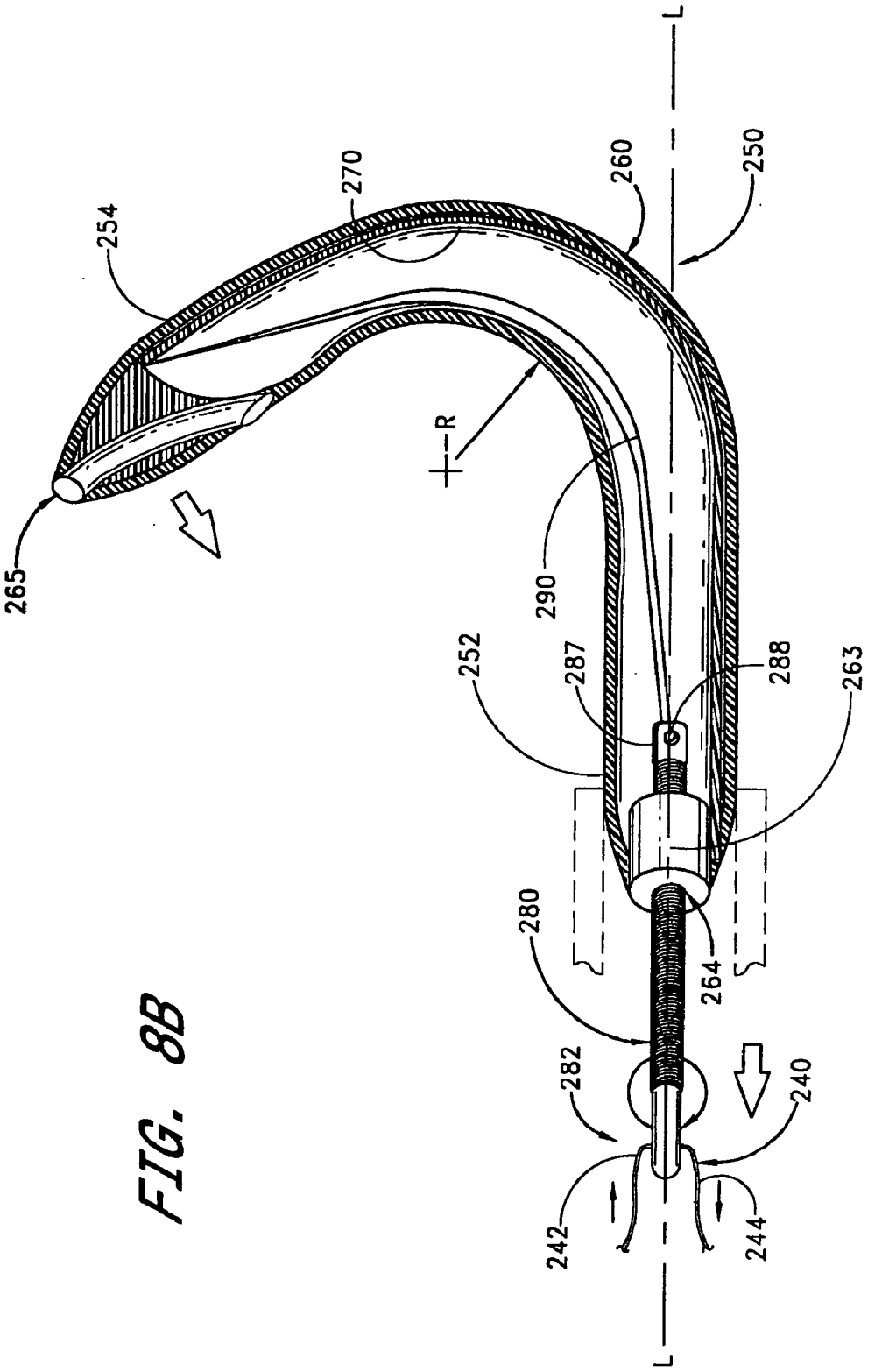
L
270
260
250
254
R
265
290
252
287
288
263
280
264
282
240
242
244
L

FIG. 8B

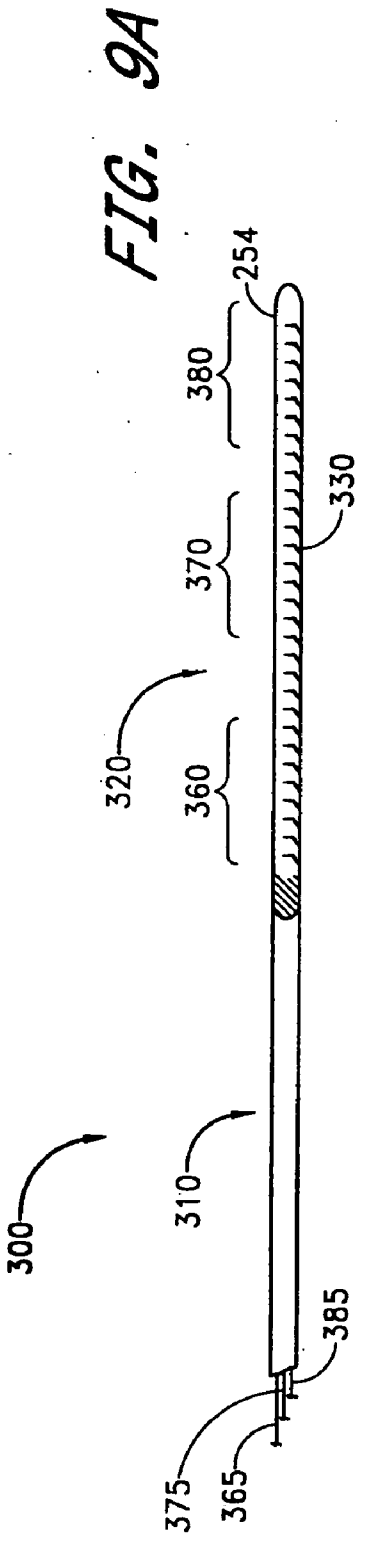
300
310
385
375
365
320
360
370
380
254
330

FIG. 9A

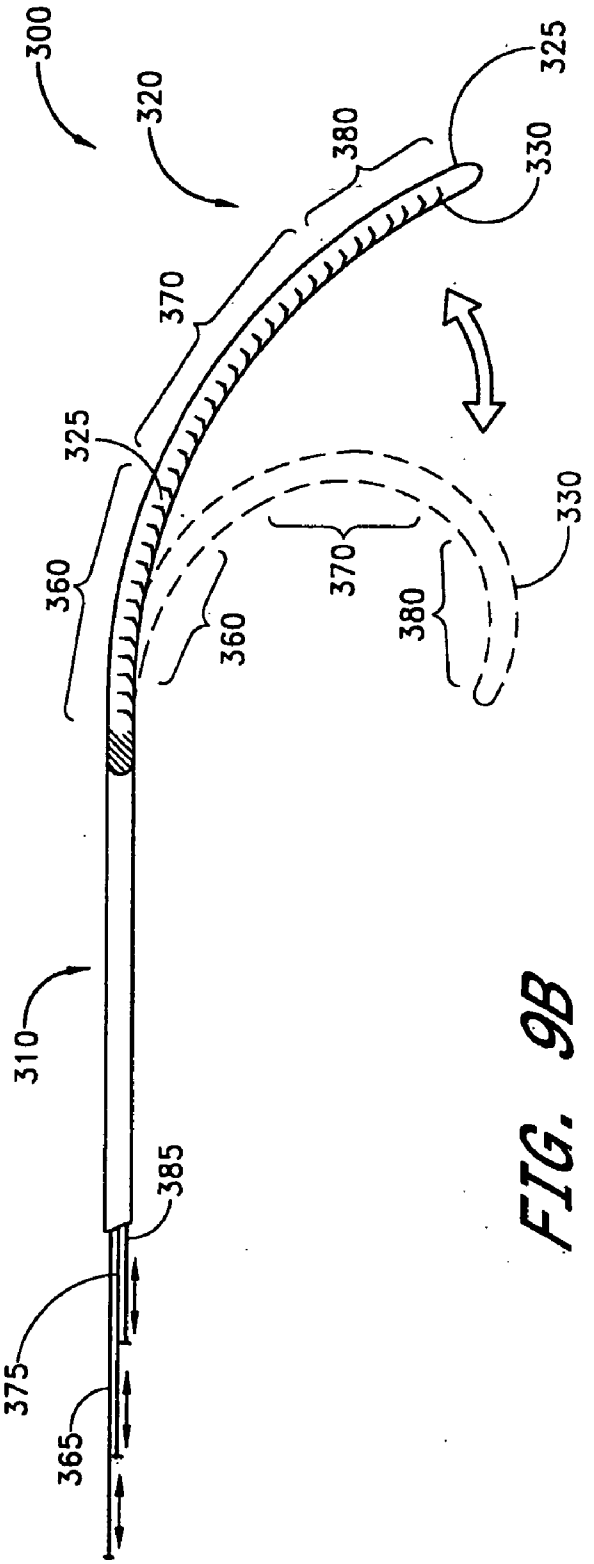
300
310
385
375
365
320
325
330
360
370
380

FIG. 9B

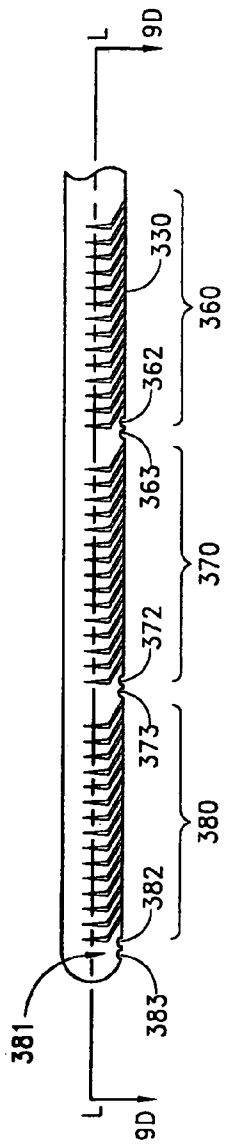

FIG. 9C

FIG. 9D

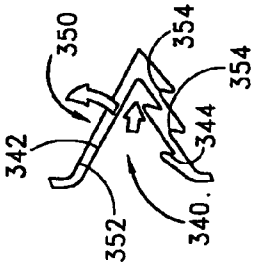

FIG. 9G

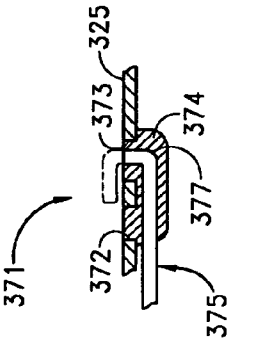

FIG. 9F

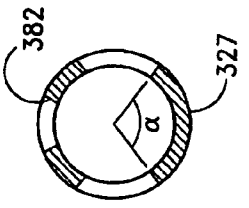

FIG. 9E

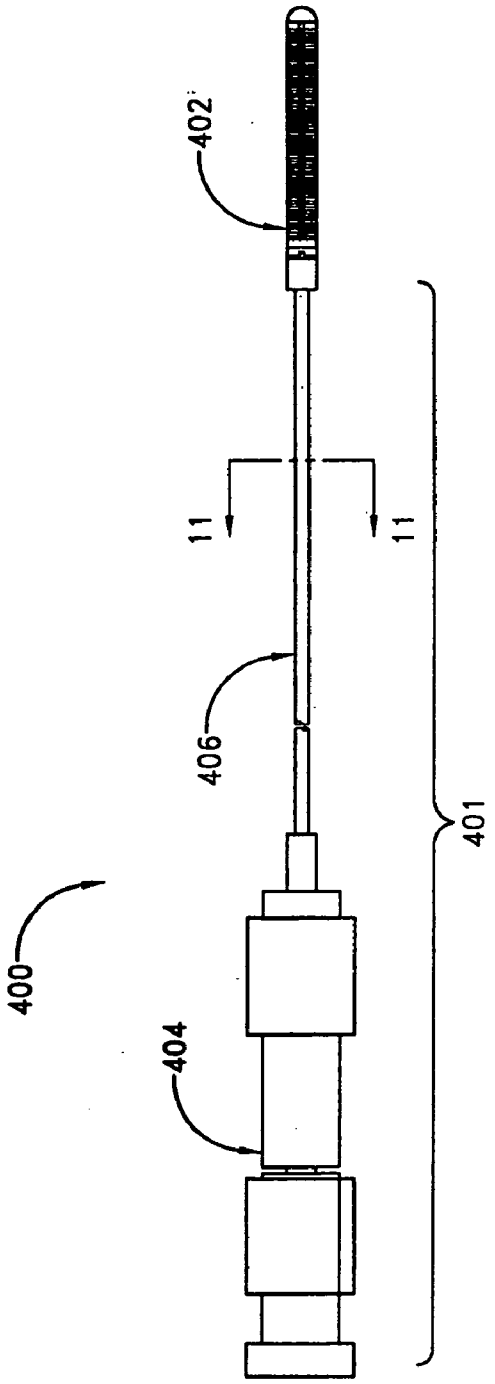

FIG. 10

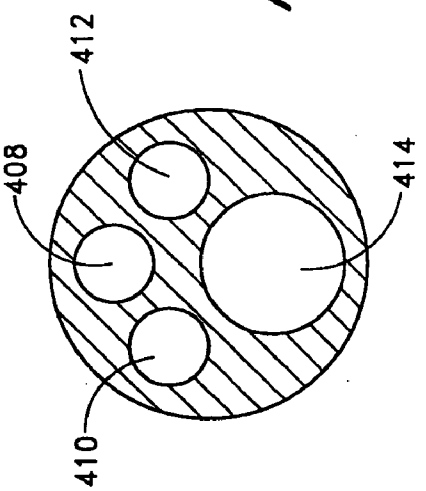

FIG. 11

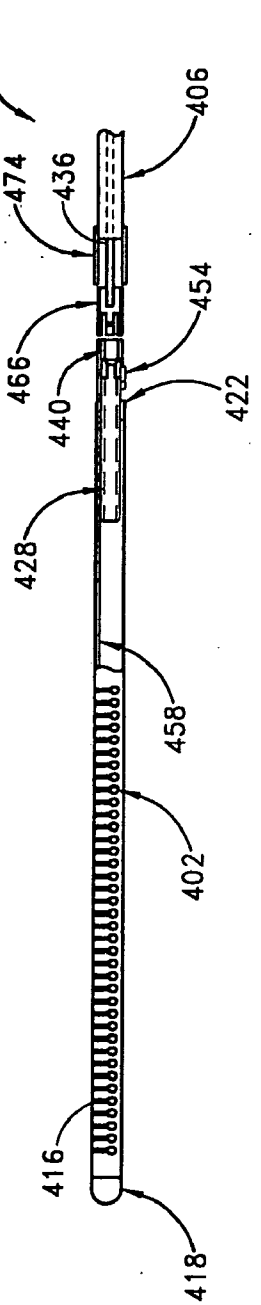
401
406
474
436
454
466
440
422
428
458
402
416
418

FIG. 12

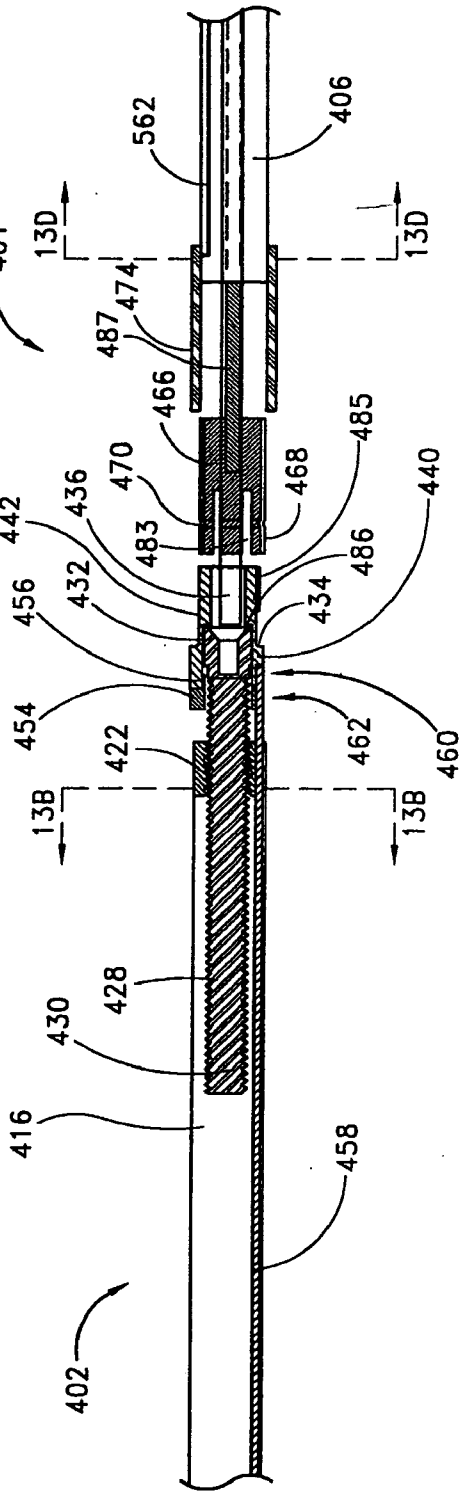
562
406
401
13D
13D
474
487
466
485
470
468
442
436
440
483
486
456
432
434
454
462
460
422
13B
13B
428
430
416
458
402

FIG. 13

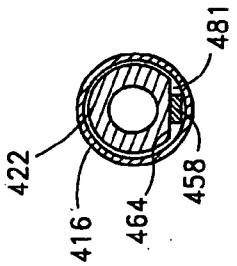

FIG. 13B

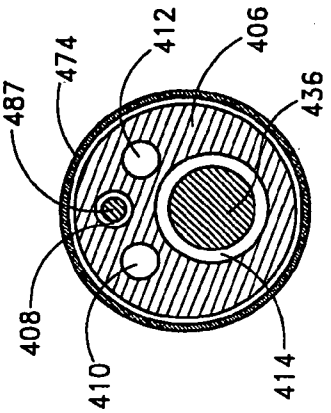

FIG. 13D

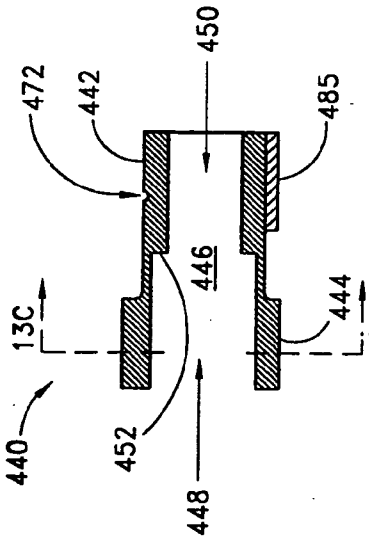

FIG. 13A

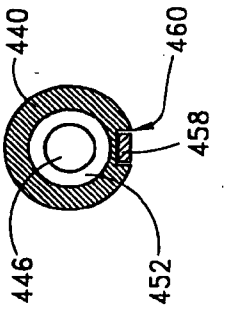

FIG. 13C

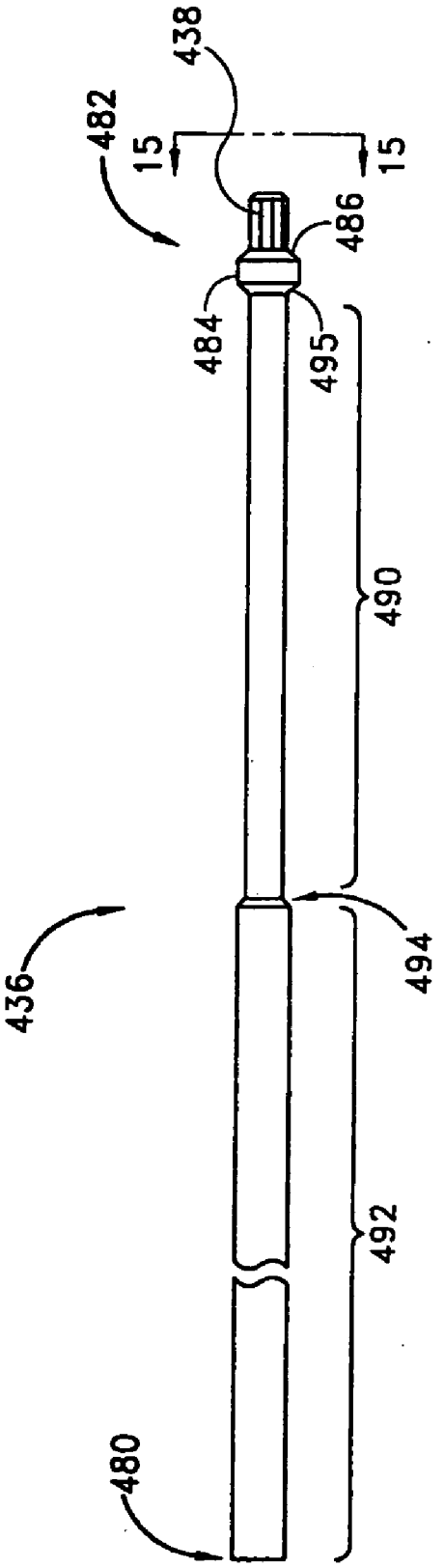

FIG. 14

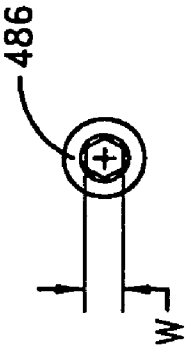

FIG. 15

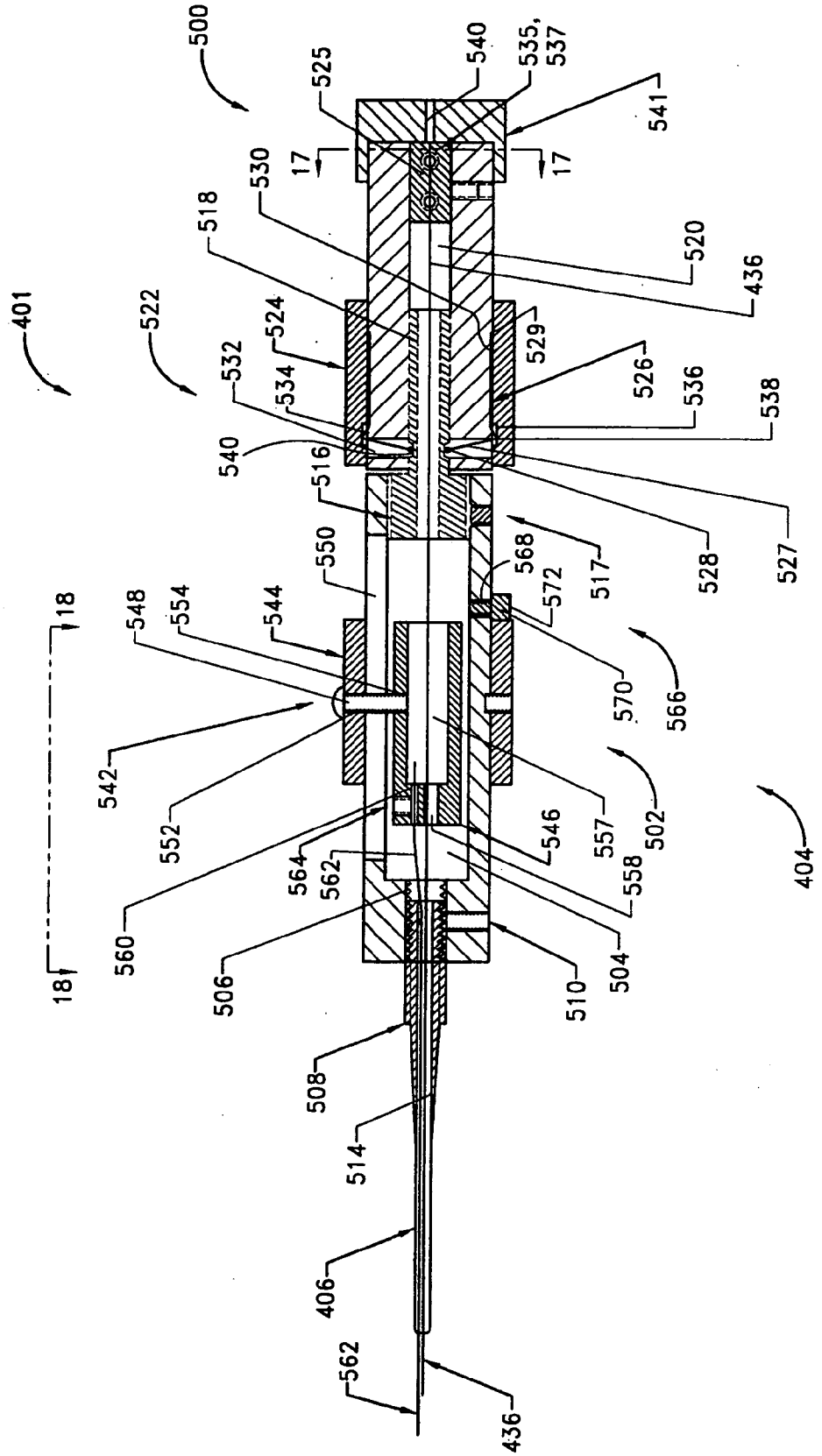
500
525
540
535,
537
541
17
17
530
518
520
436
401
522
524
529
532
534
526
536
538
540
516
528
527
550
568
517
572
18
548
554
544
570
566
542
552
557
502
546
564
562
558
404
560
506
504
510
18
508
514
406
562
436

FIG. 16

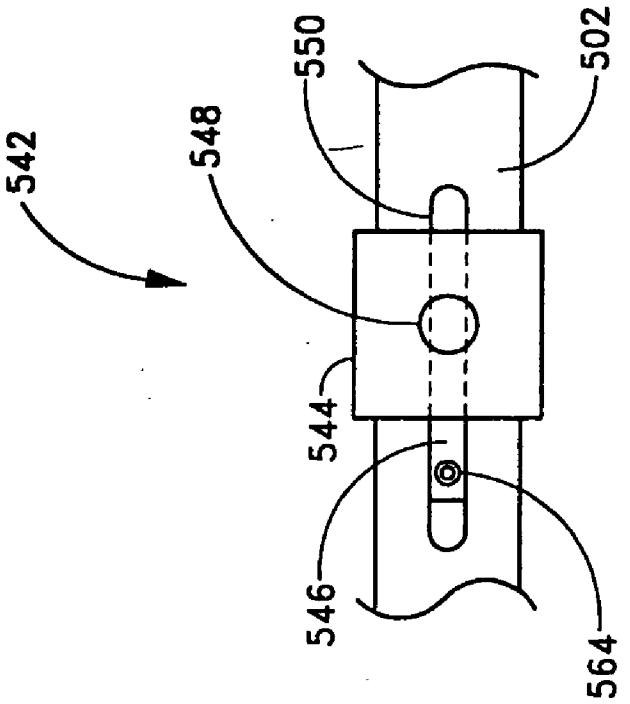

FIG. 18

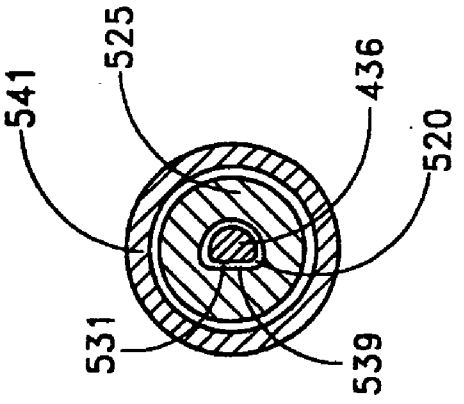

FIG. 17

FIG. 19

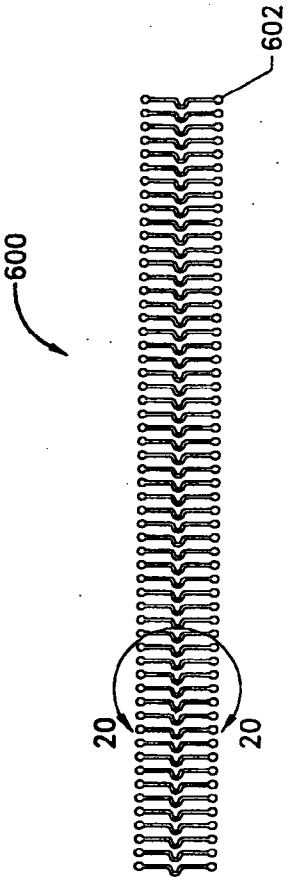

FIG. 20

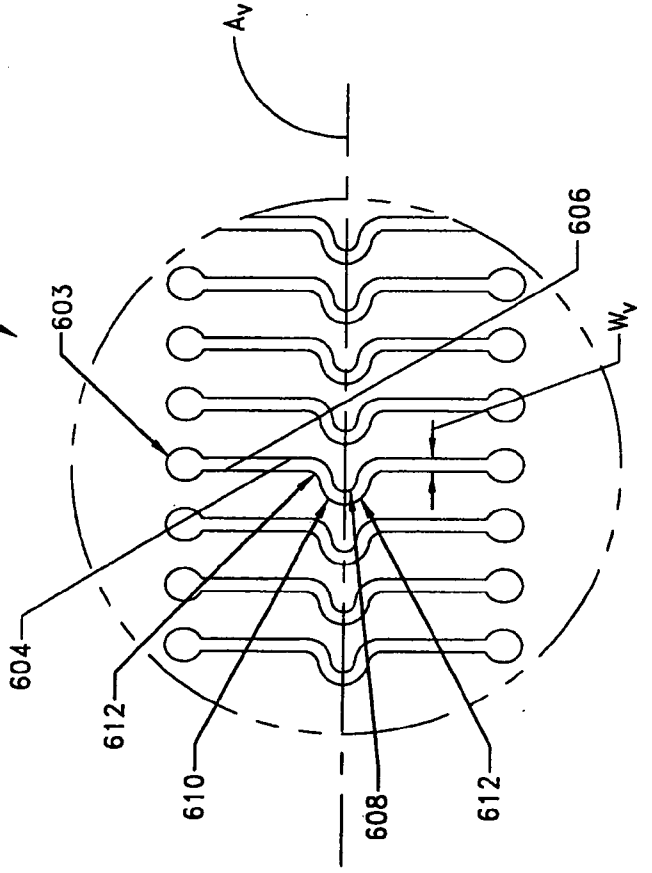

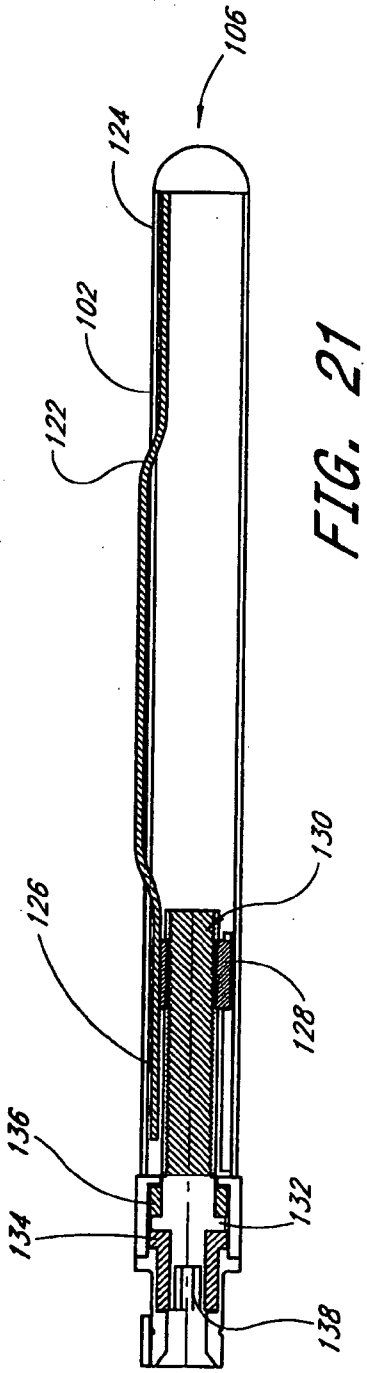
106
124
102
122
126
130
128
136
134
132
138

FIG. 21

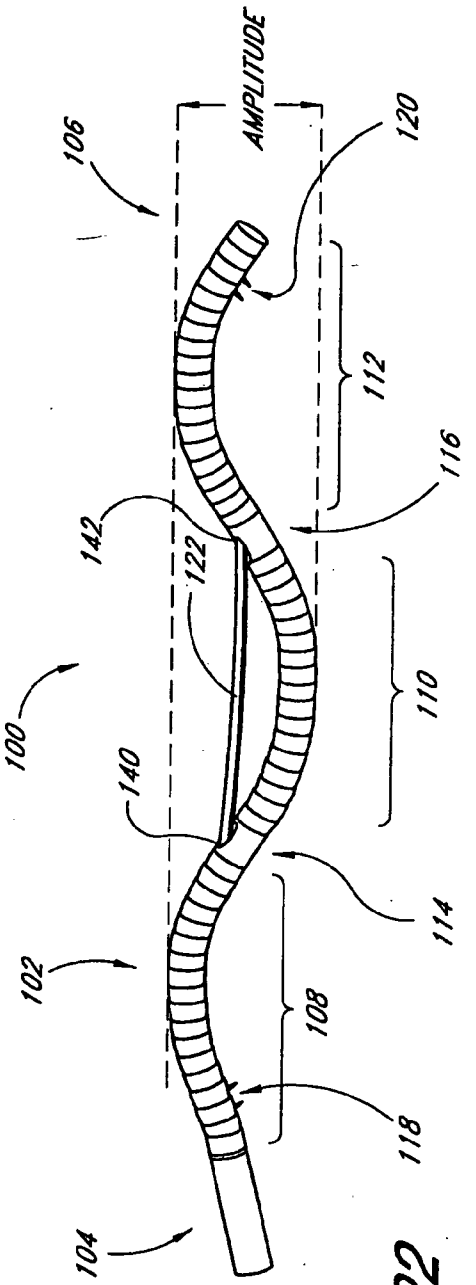
AMPLITUDE
106
120
112
116
142
122
100
140
110
114
102
108
118
104

FIG. 22

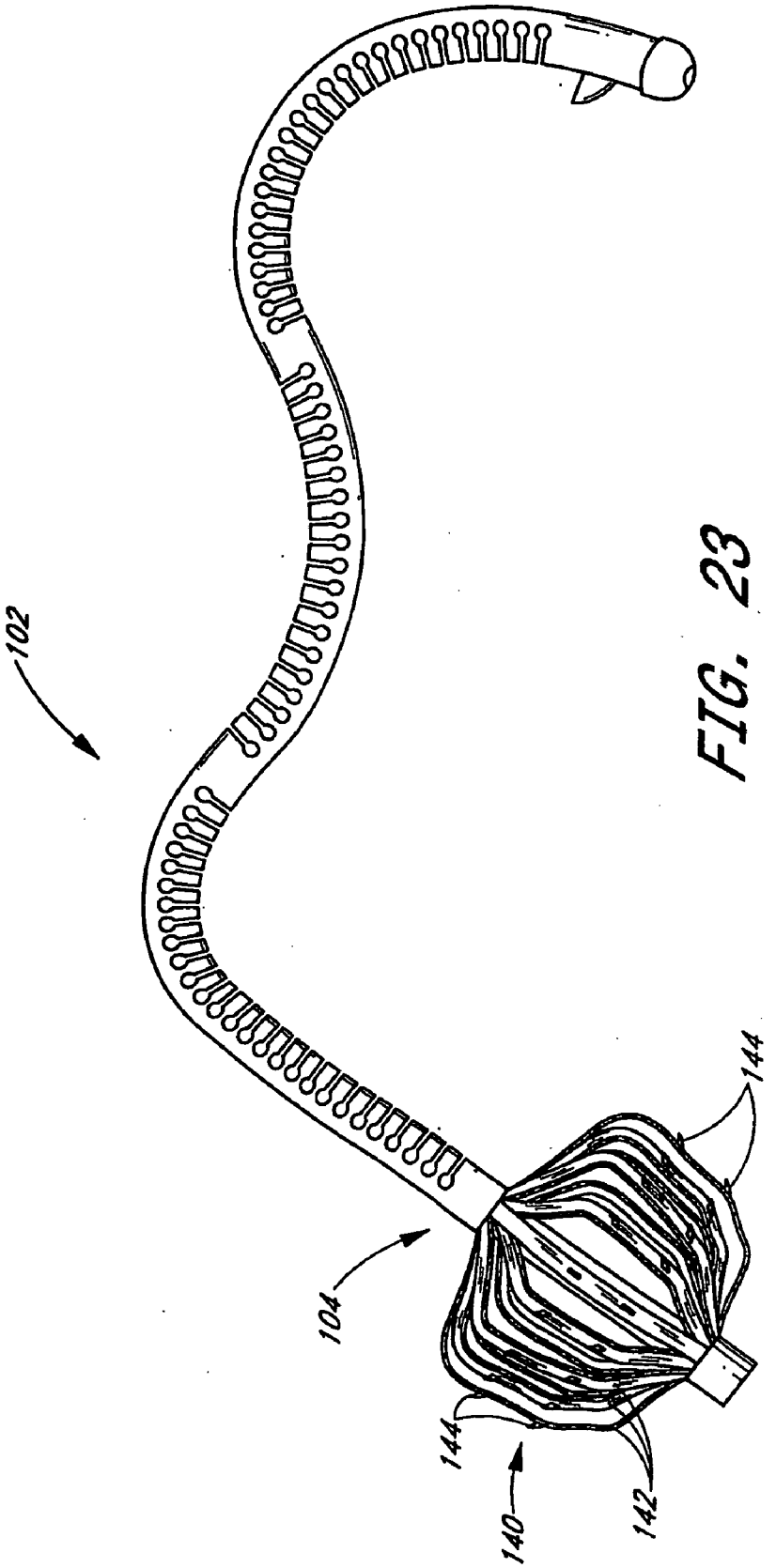

FIG. 23

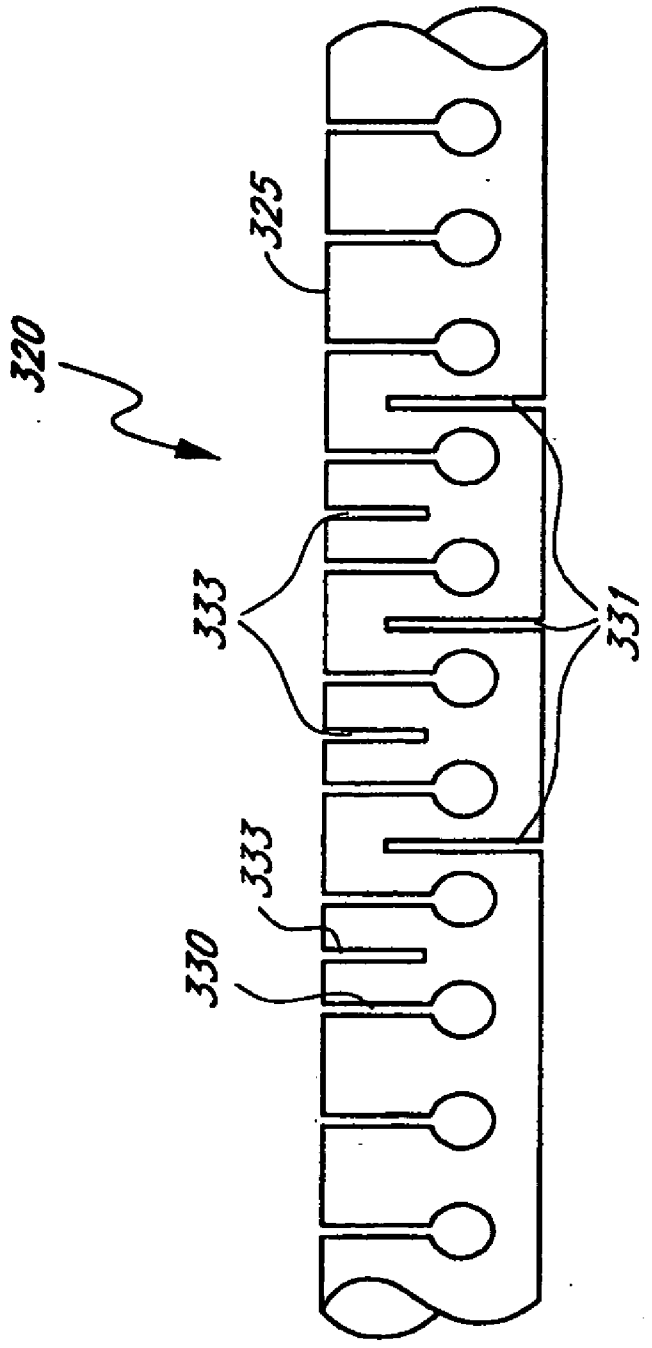

FIG. 24

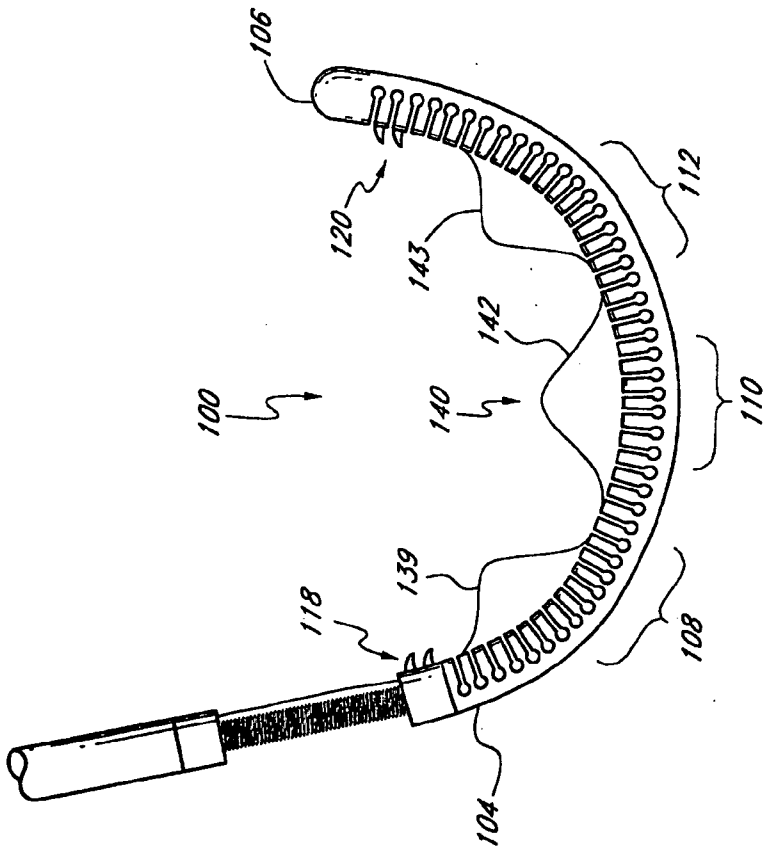

FIG. 25

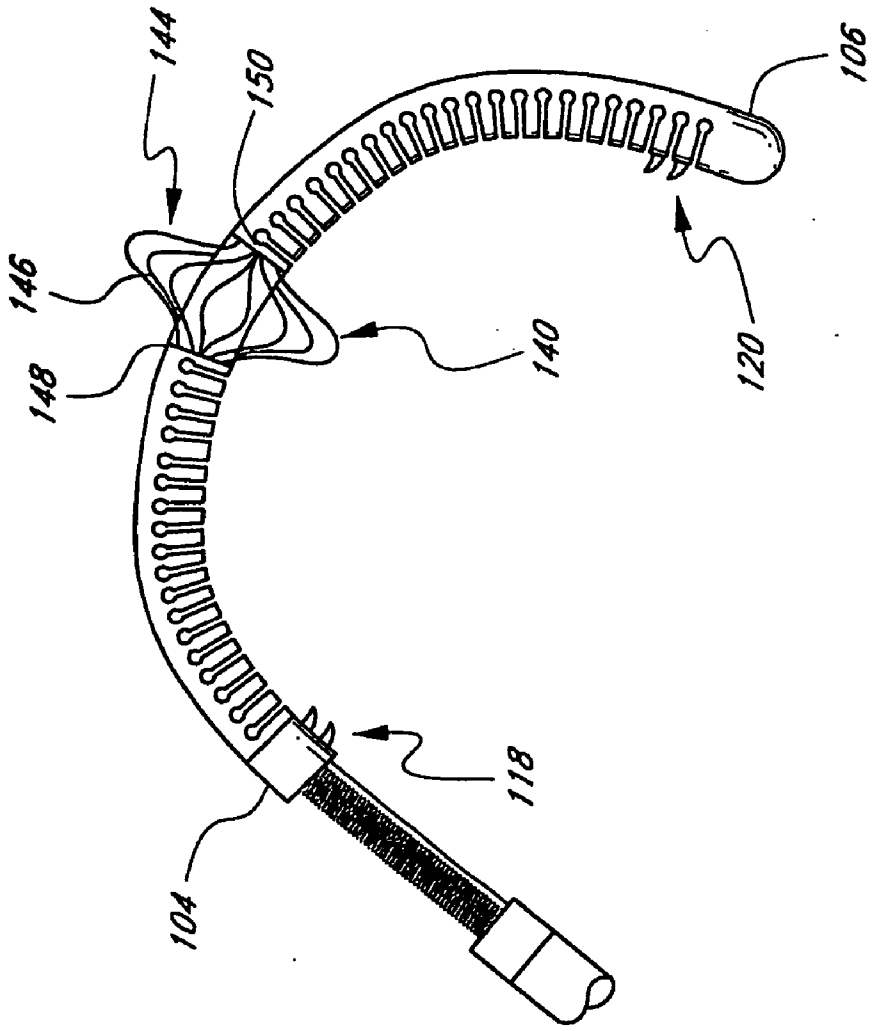

FIG. 26

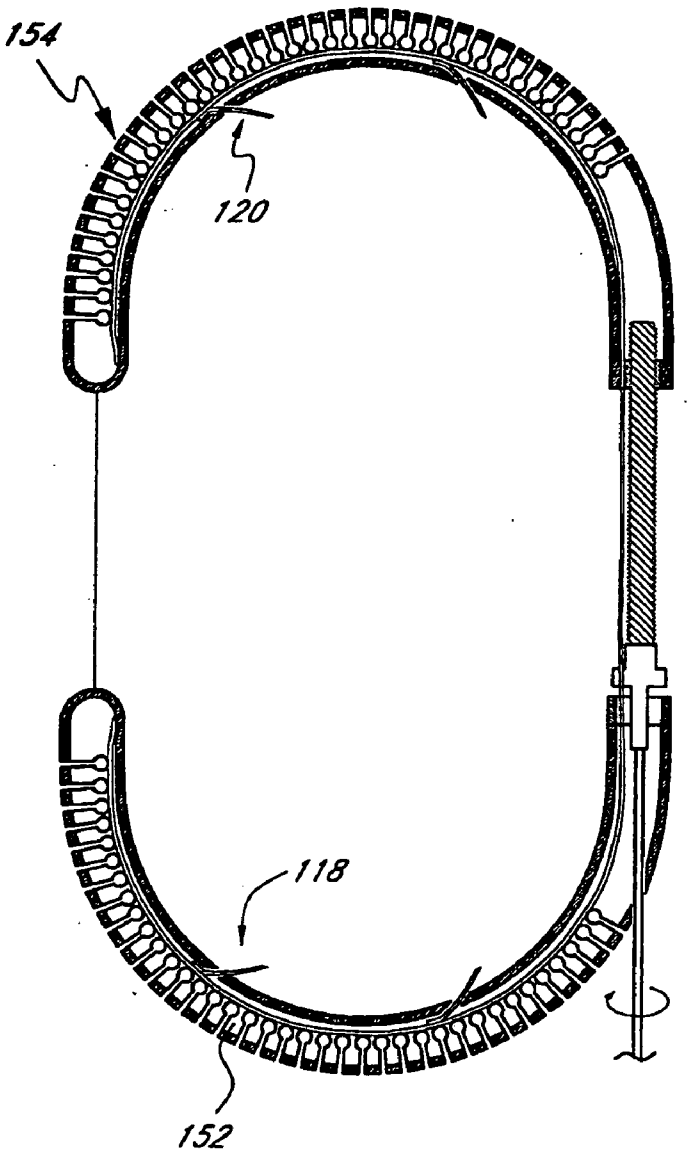

FIG. 27

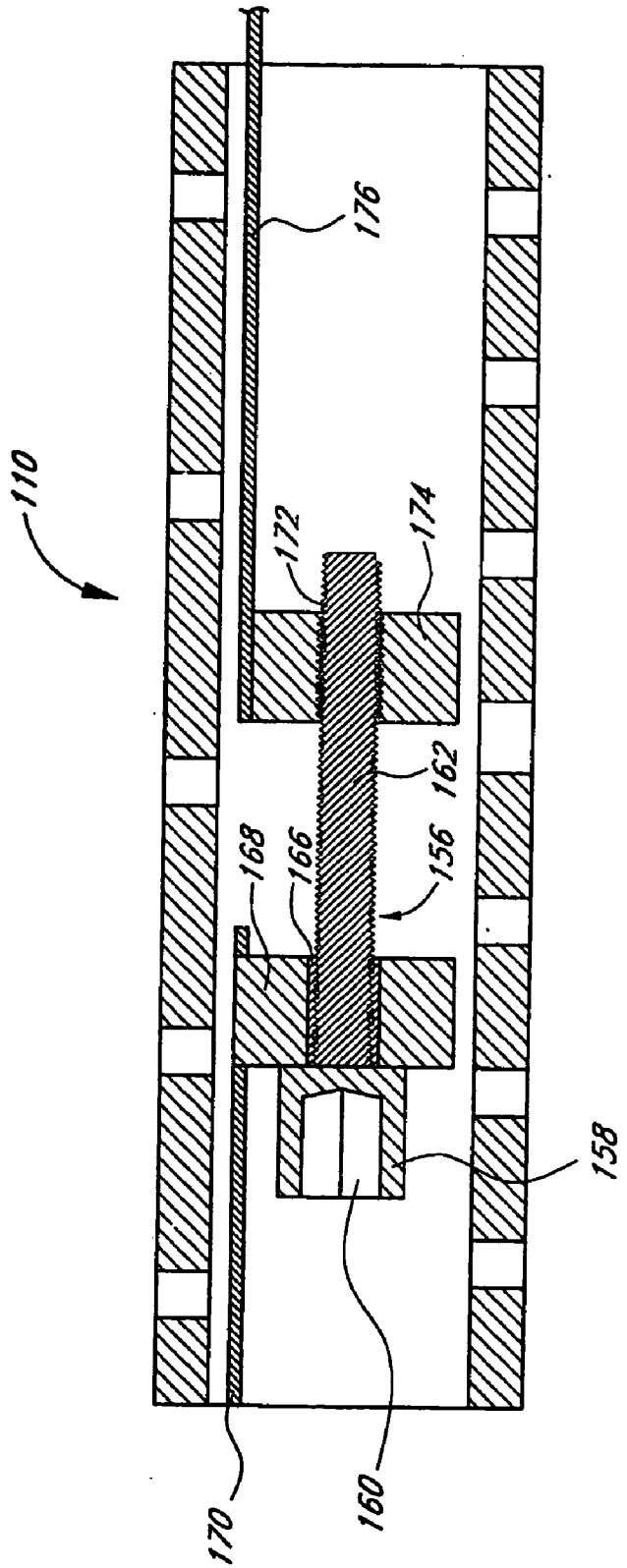

FIG. 28

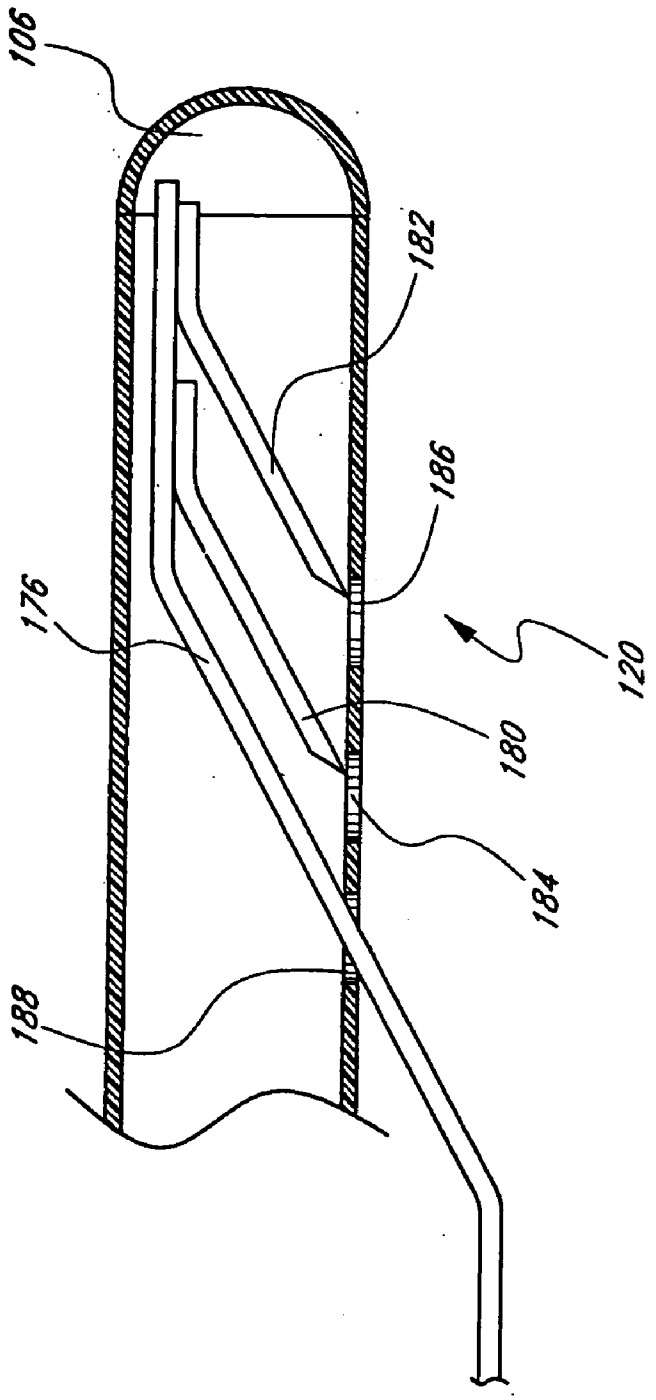

FIG. 29

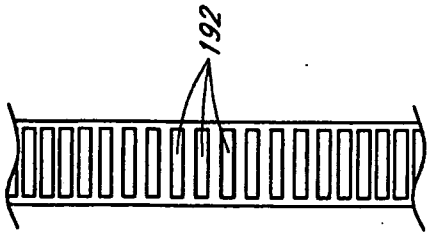

FIG. 30B

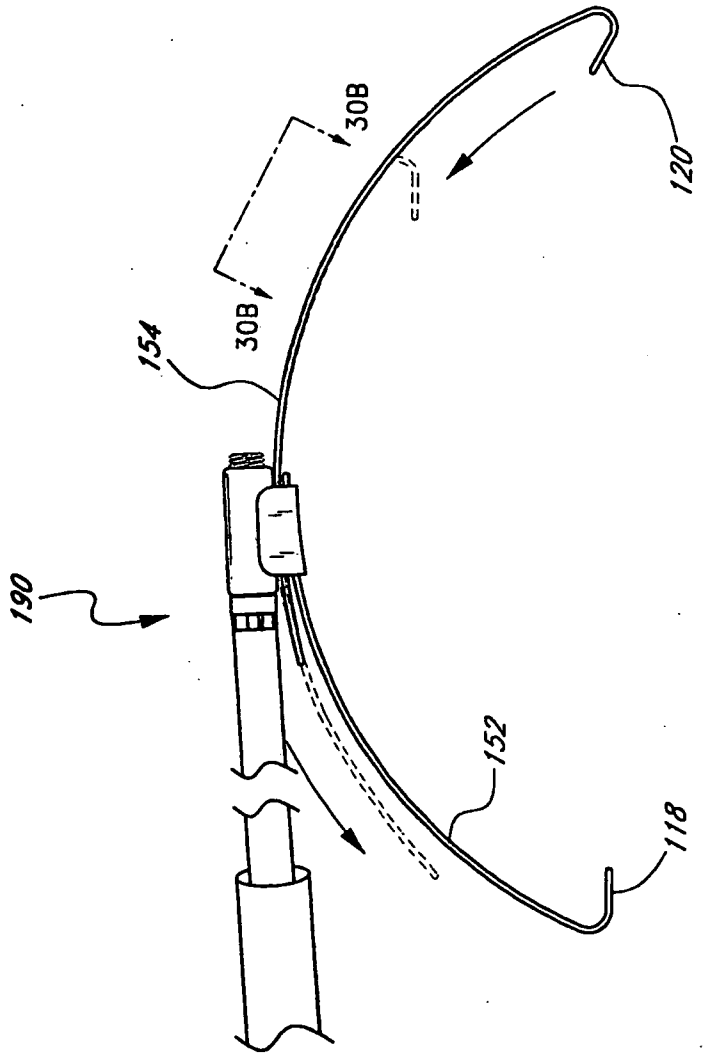

FIG. 30A

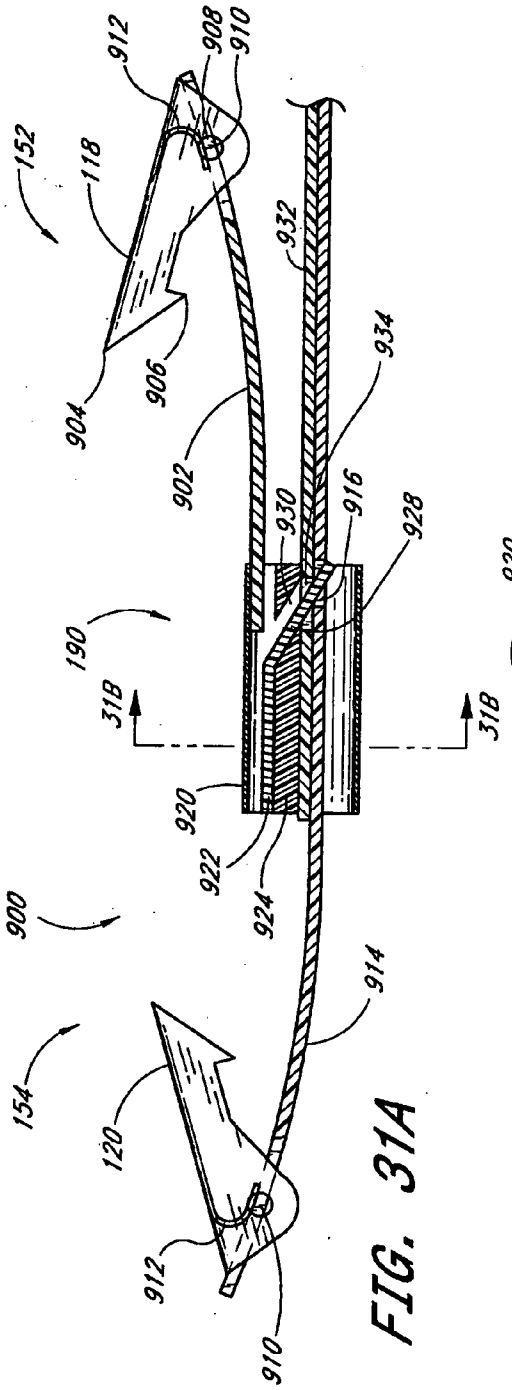

FIG. 31A

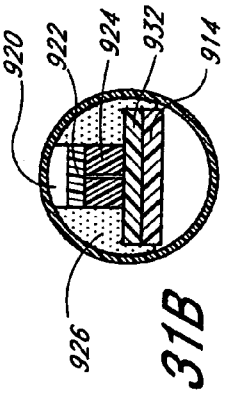

FIG. 31B

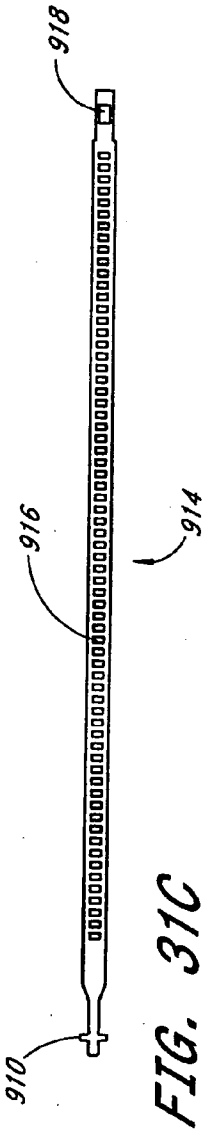

FIG. 31C

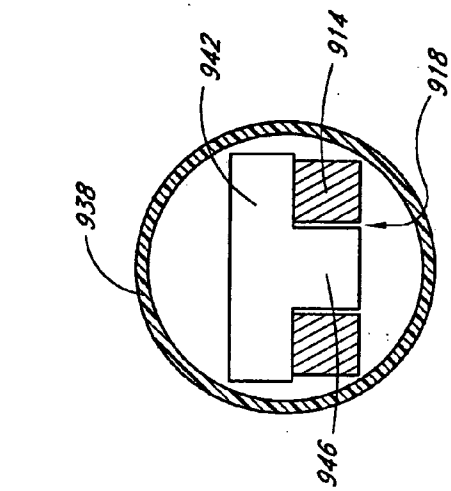

FIG. 31E

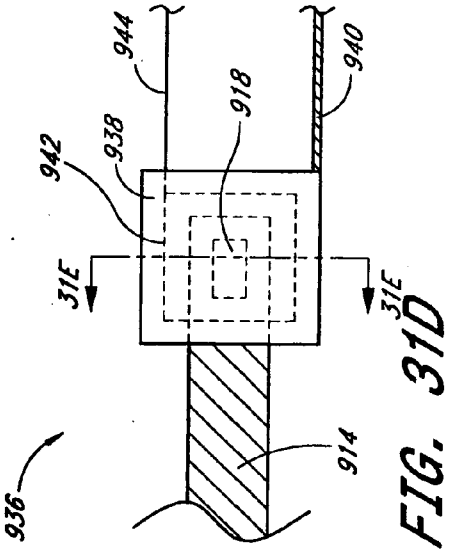

FIG. 31D

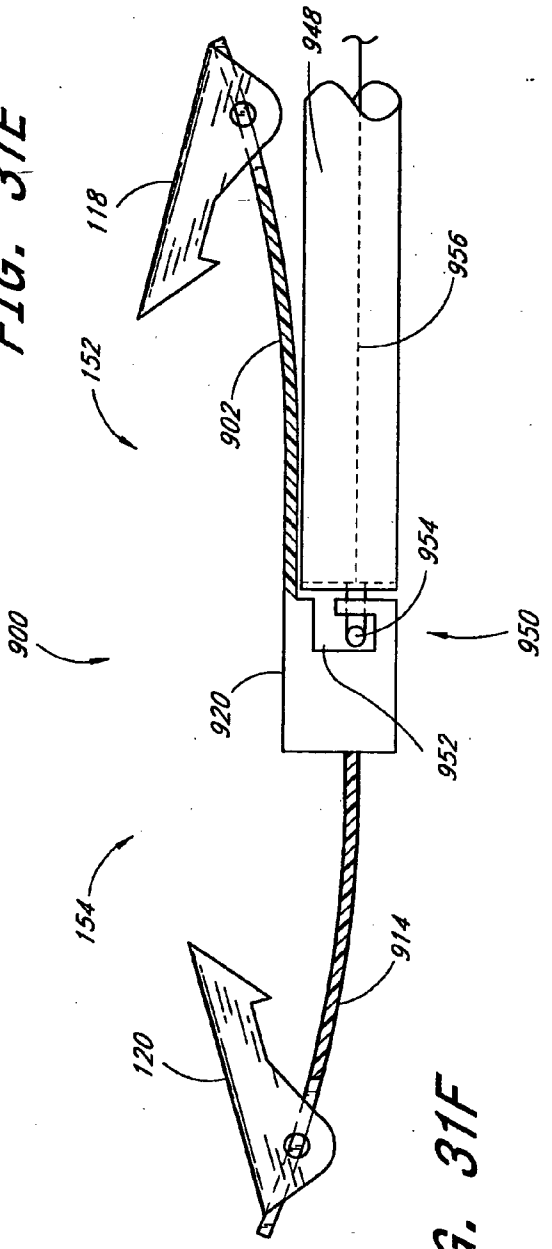

FIG. 31F

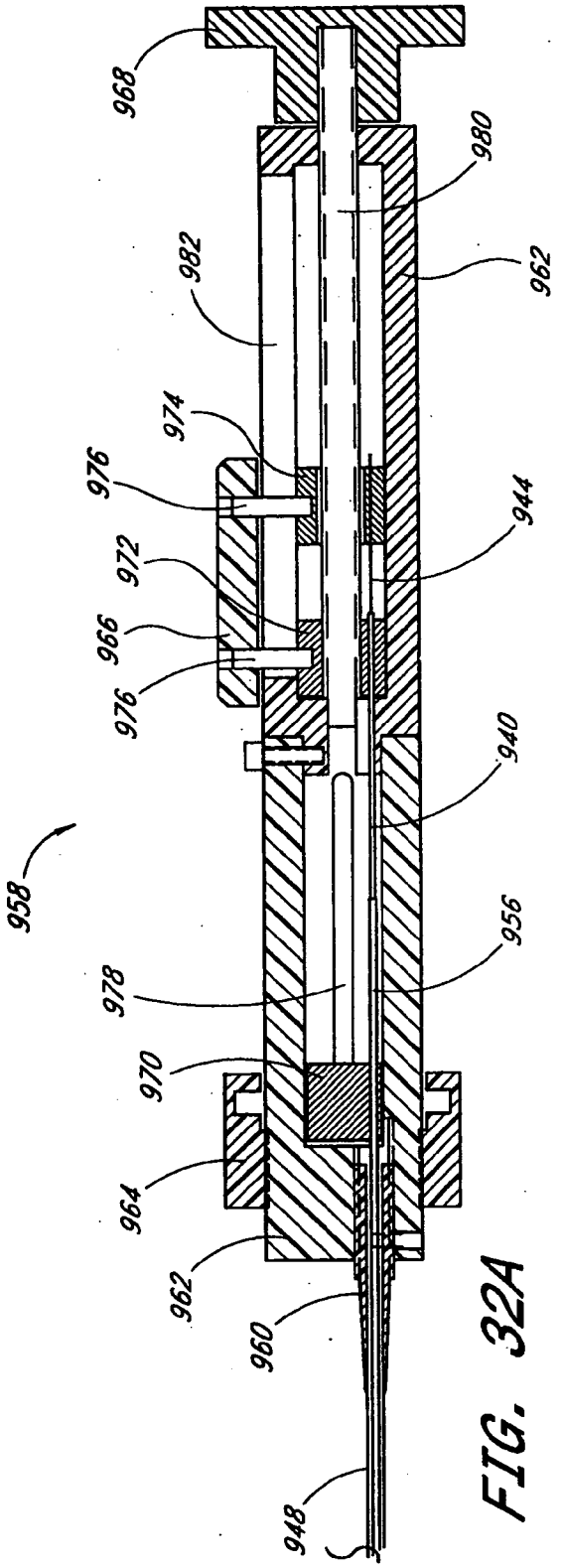

FIG. 32A

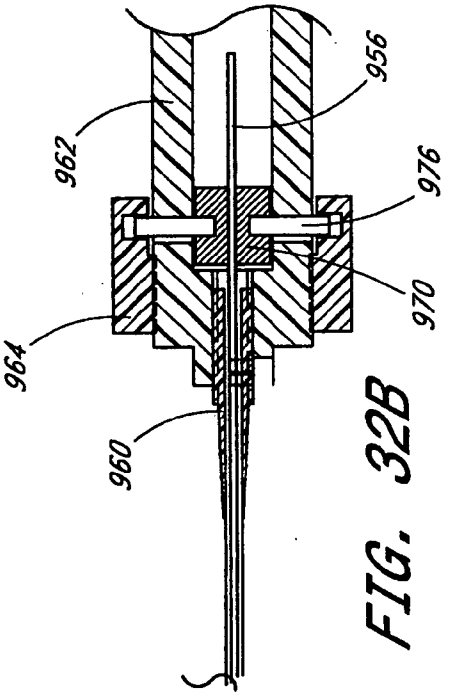

FIG. 32B

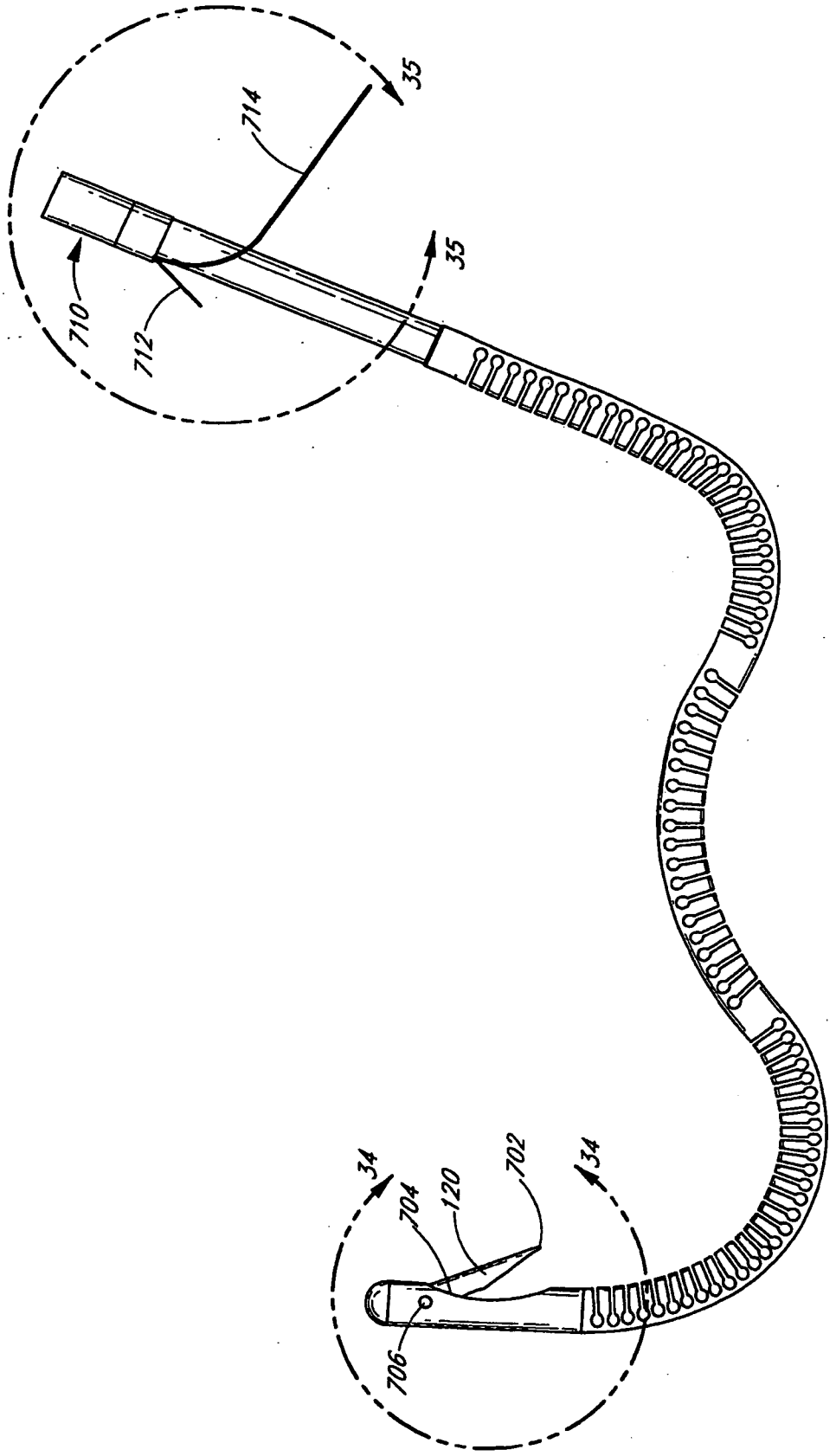

FIG. 33

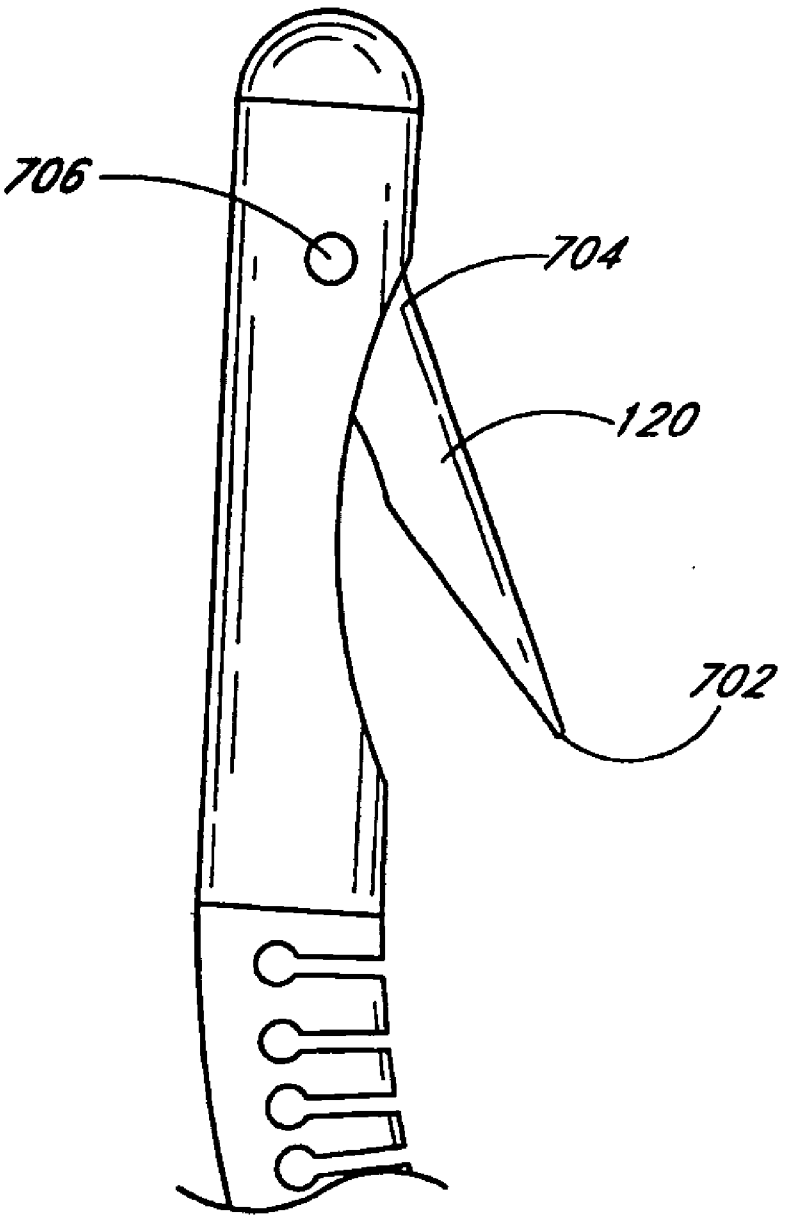

FIG. 34

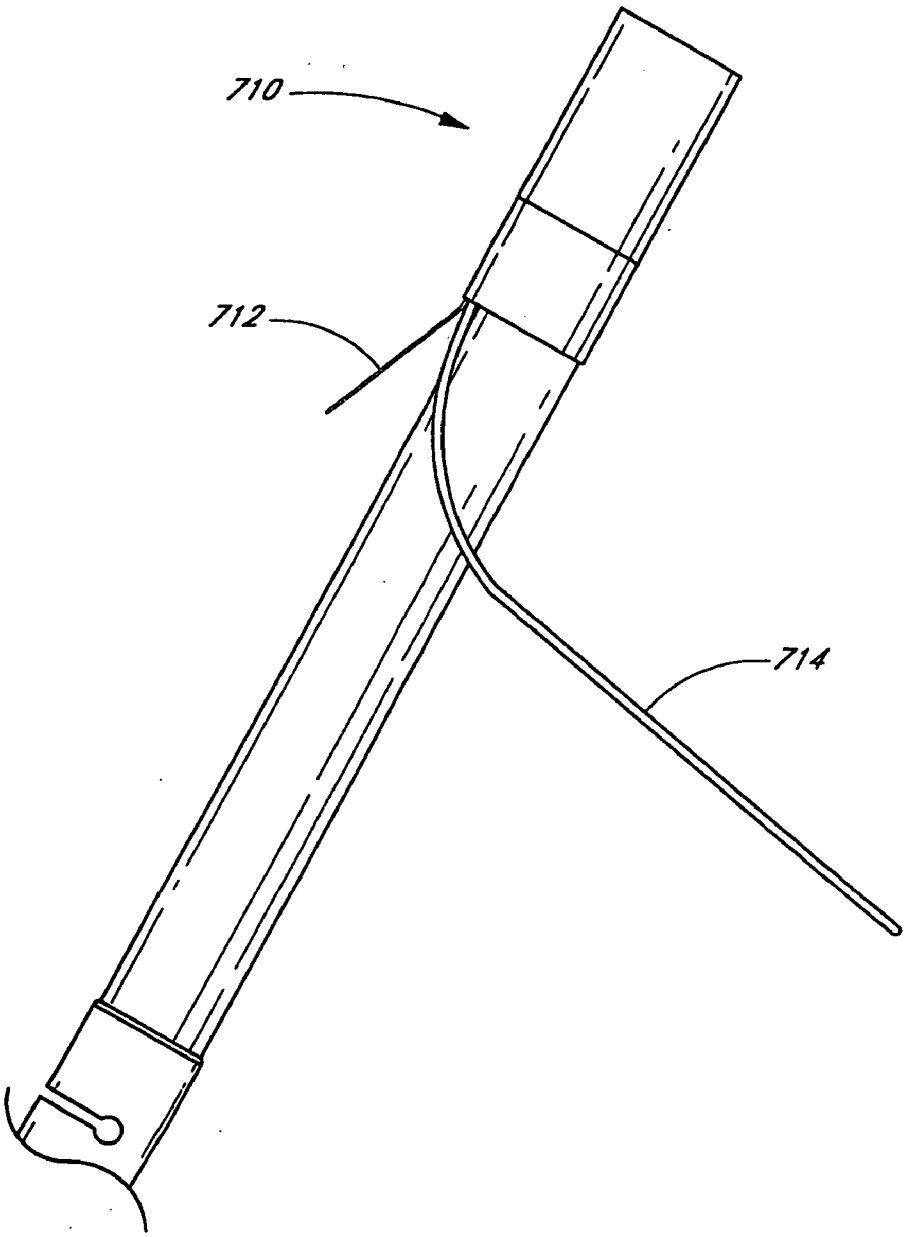

FIG. 35

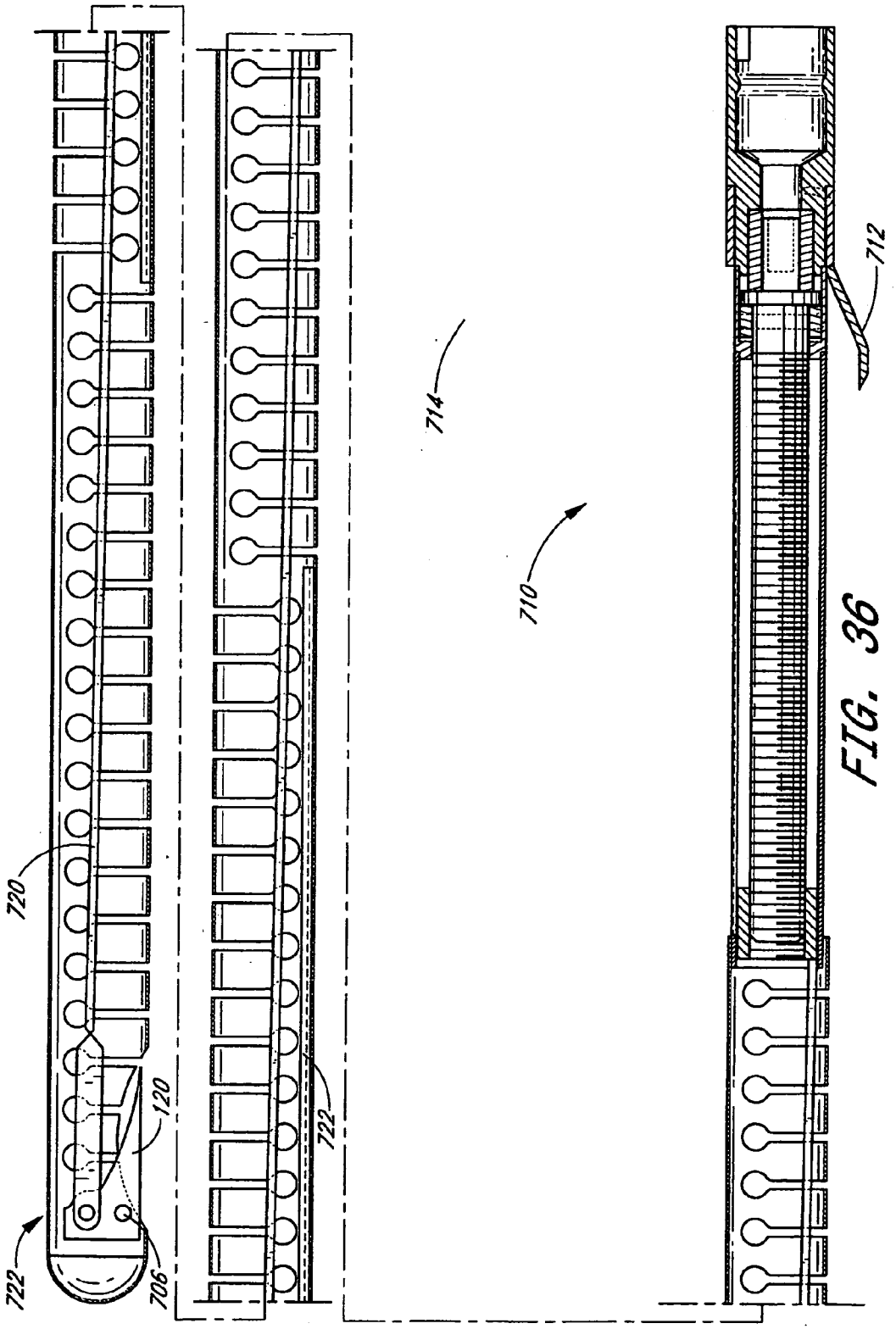

FIG. 36

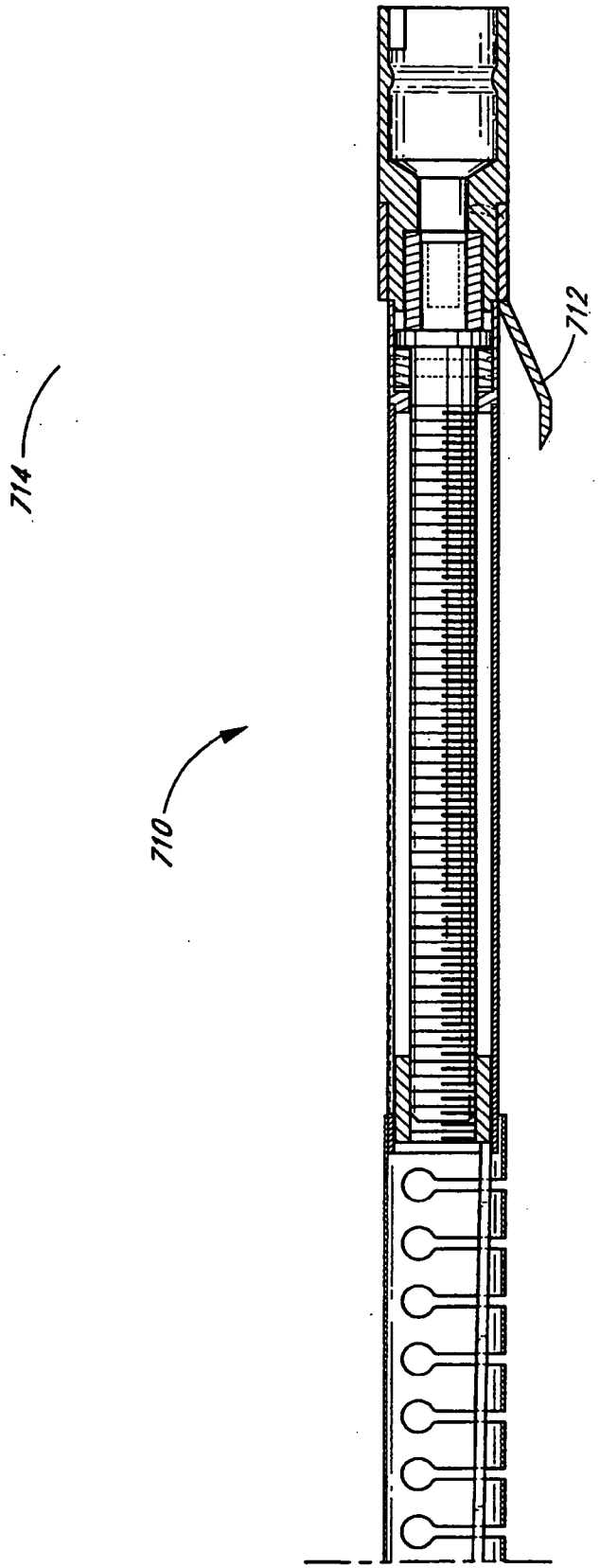

FIG. 37

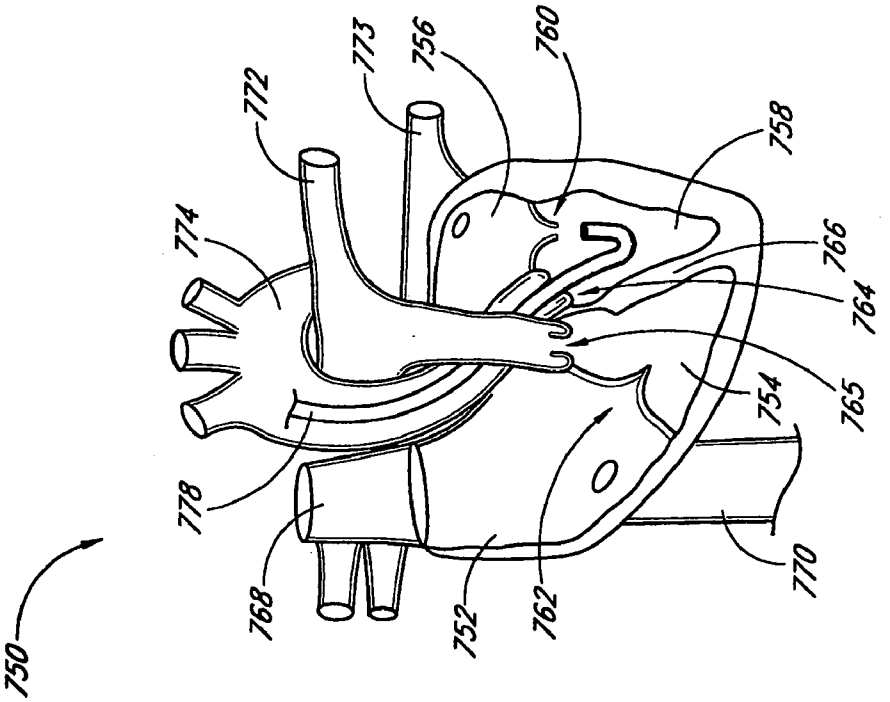

FIG. 38

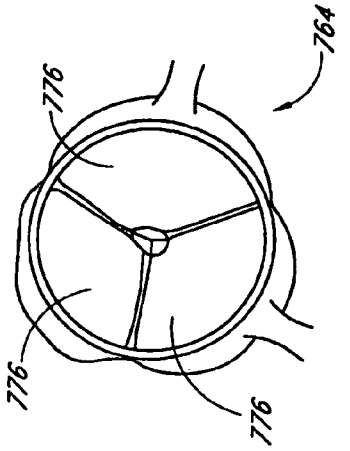

FIG. 38C

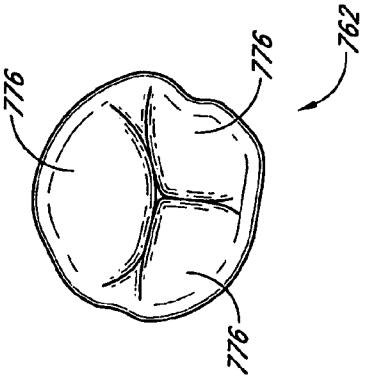

FIG. 38B

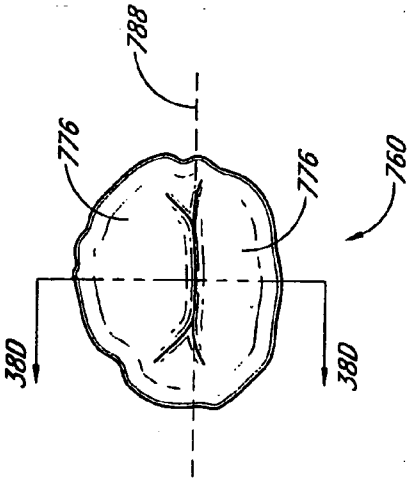

FIG. 38A

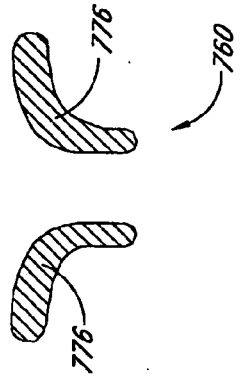

FIG. 38F

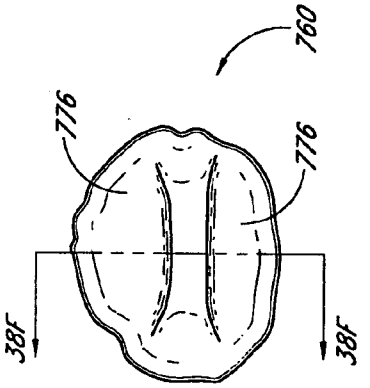

FIG. 38E

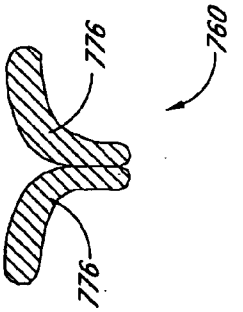

FIG. 38D

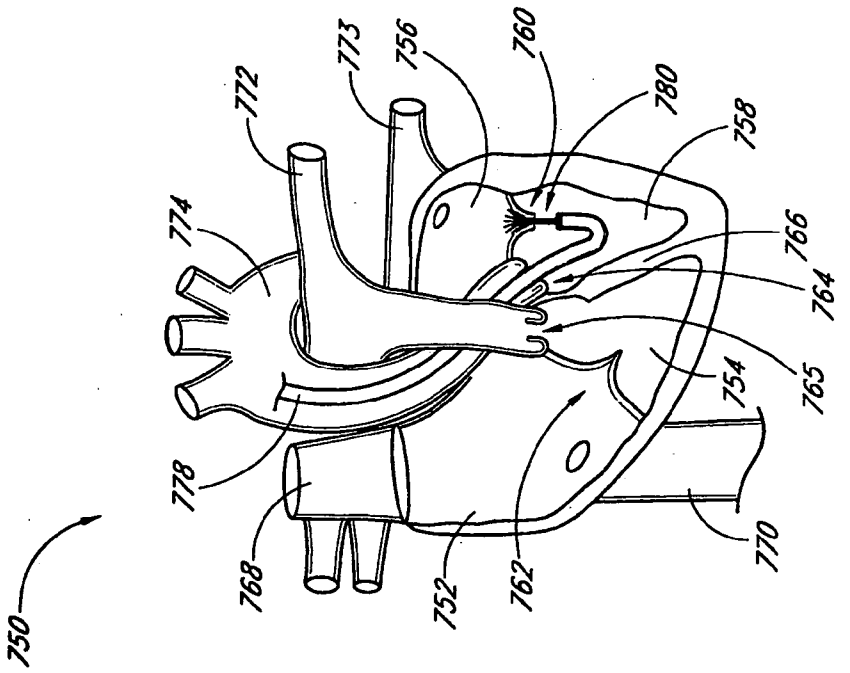
750
752
754
756
758
760
762
764
765
766
768
770
772
773
774
778
780

FIG. 39

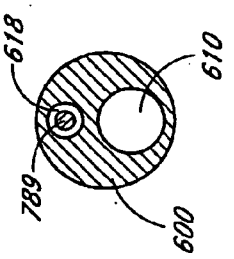

FIG. 40B

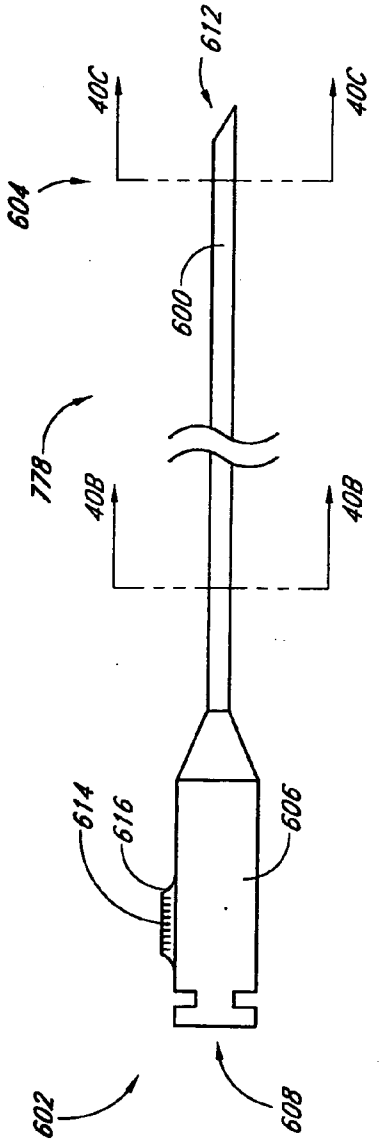

FIG. 40A

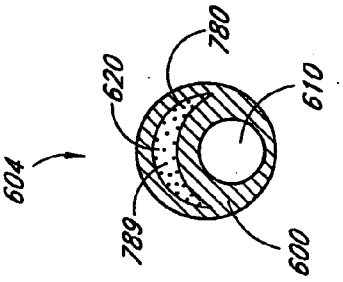

FIG. 40C

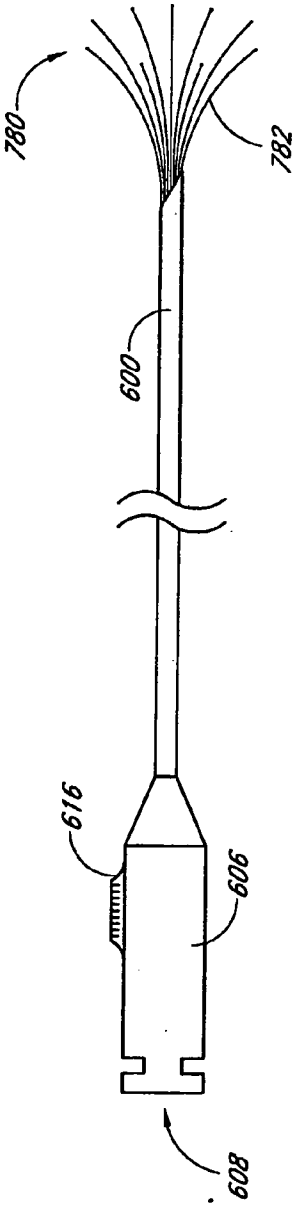

FIG. 40D

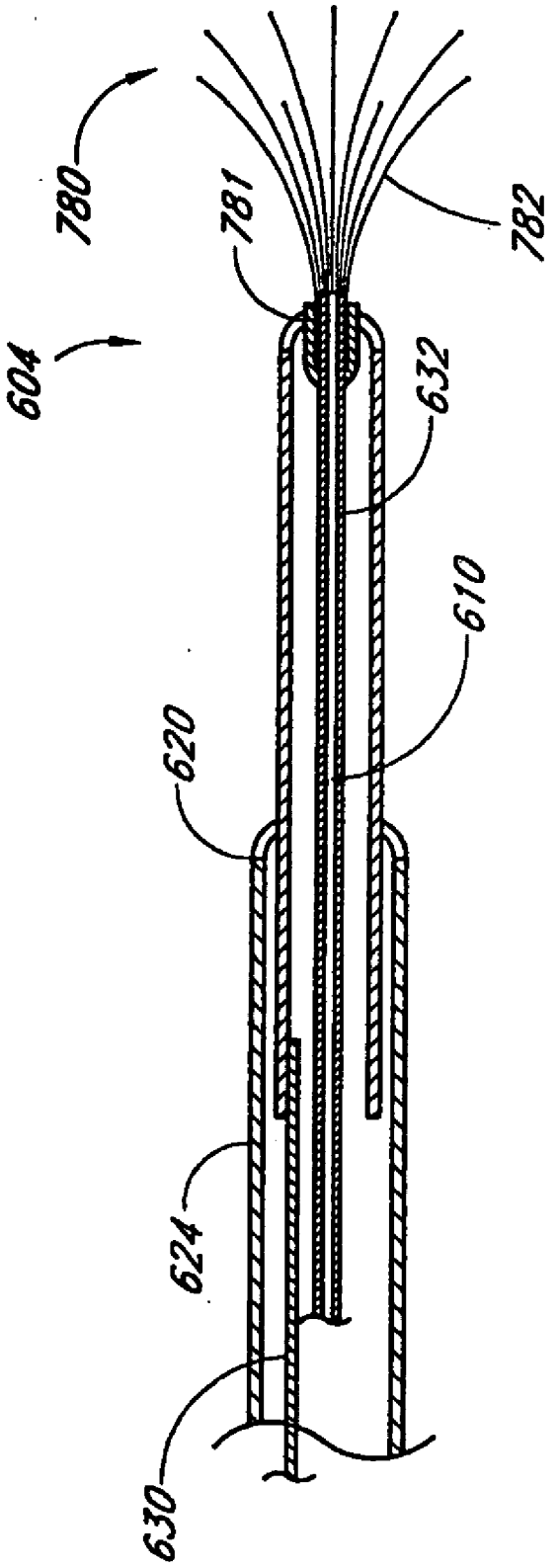

FIG. 40E

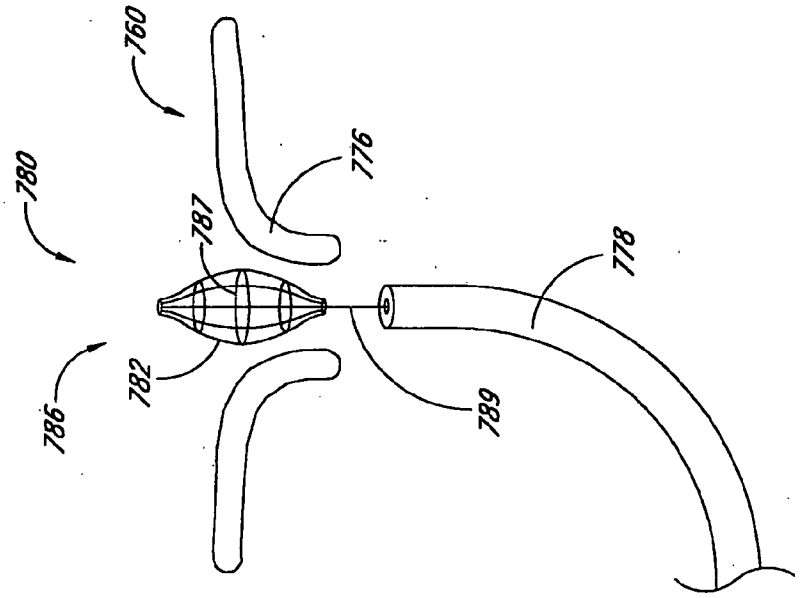

FIG. 41B

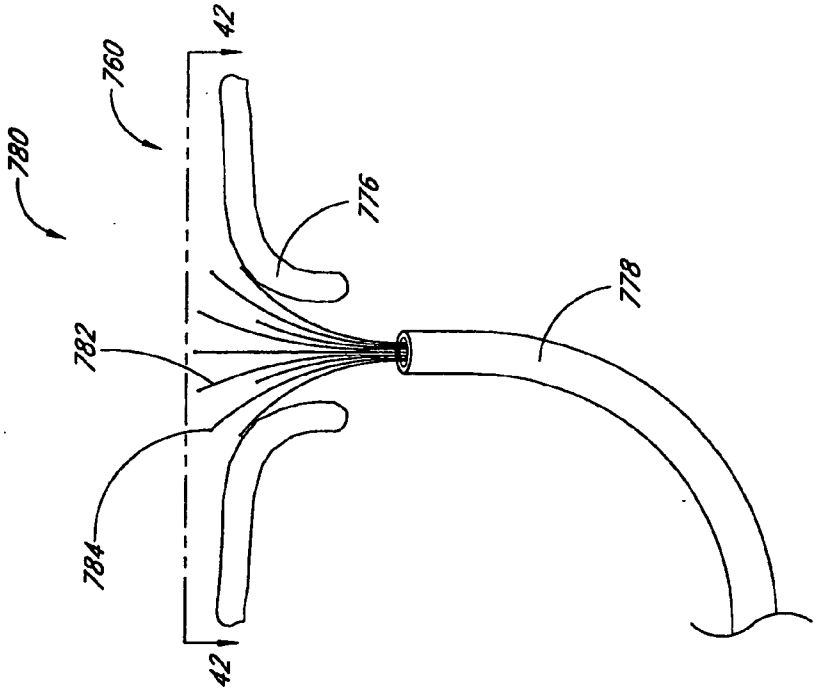

FIG. 41A

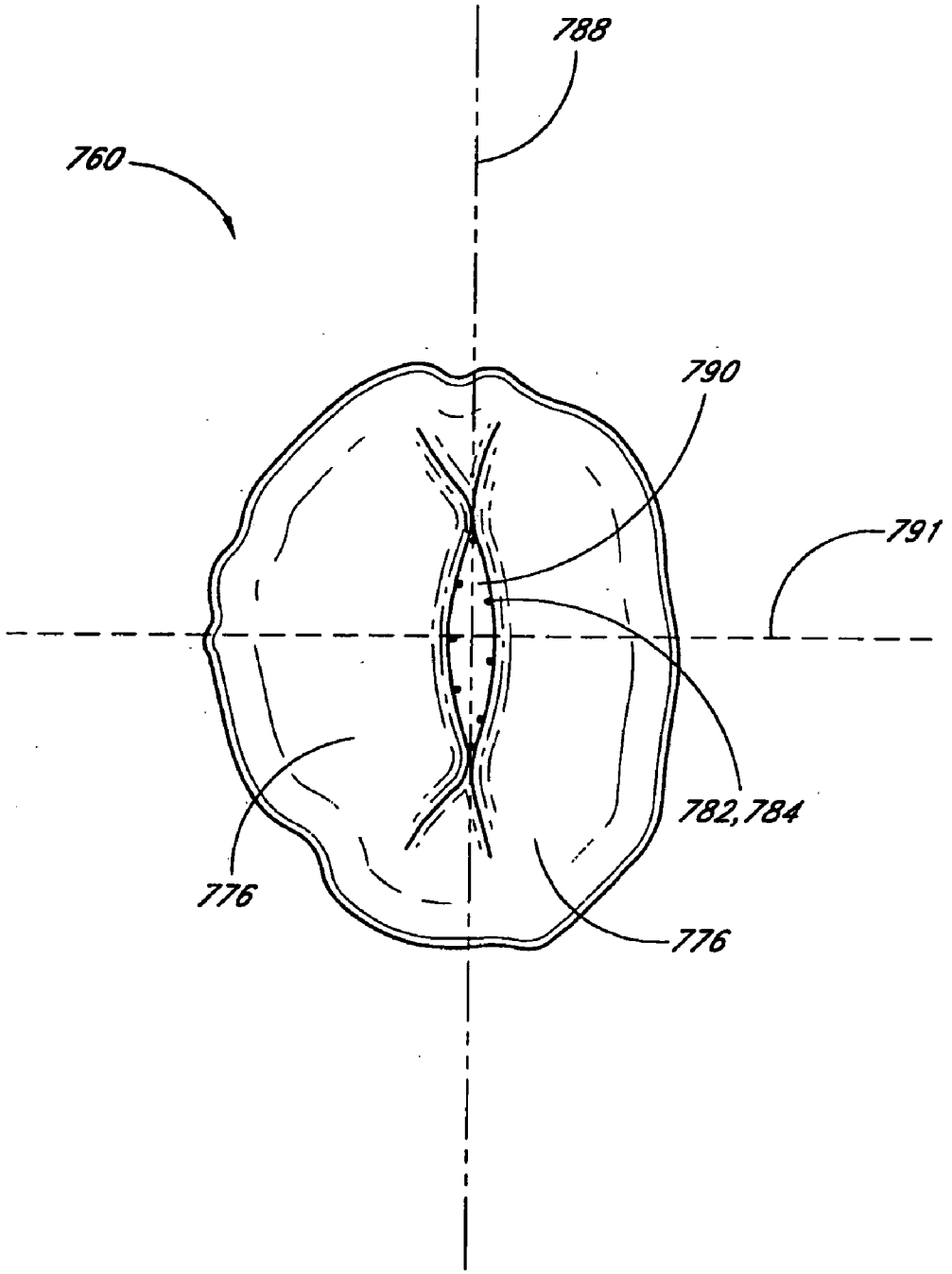

FIG. 42

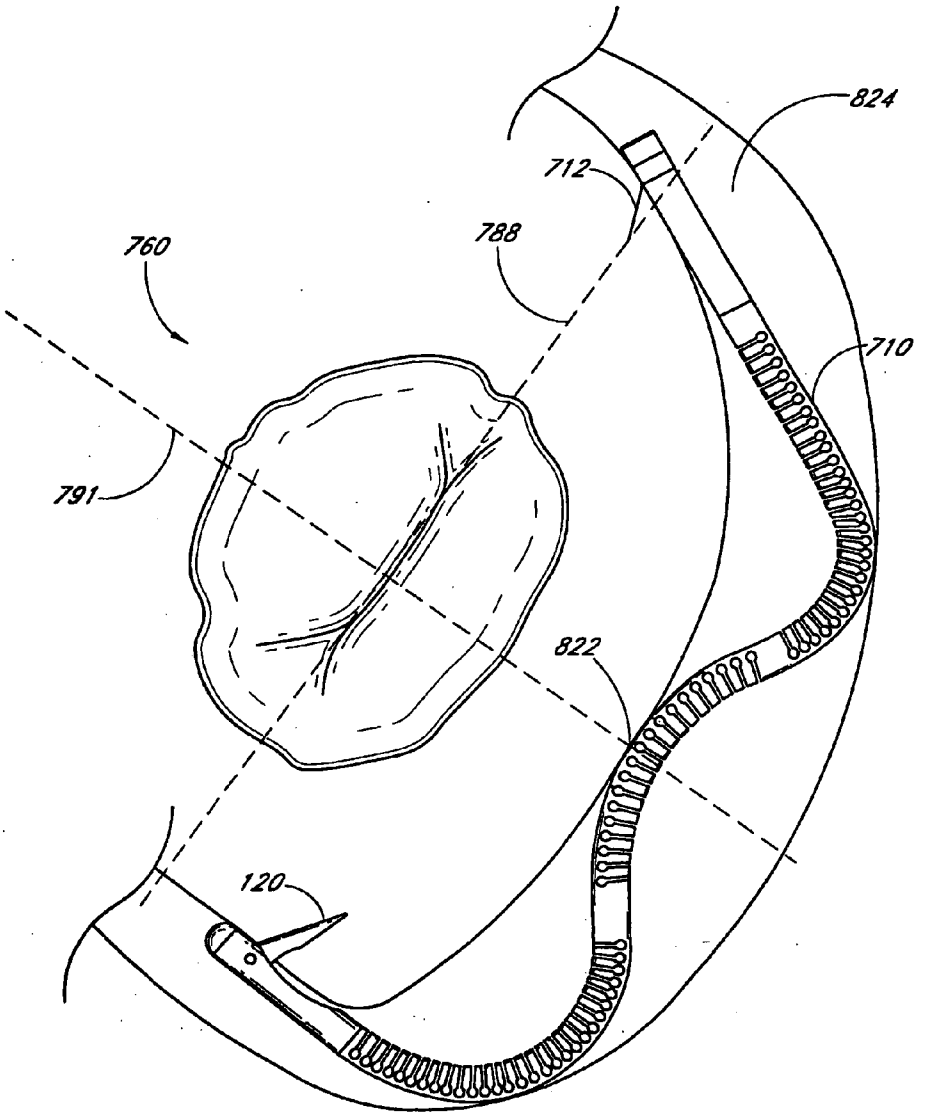

FIG. 42A

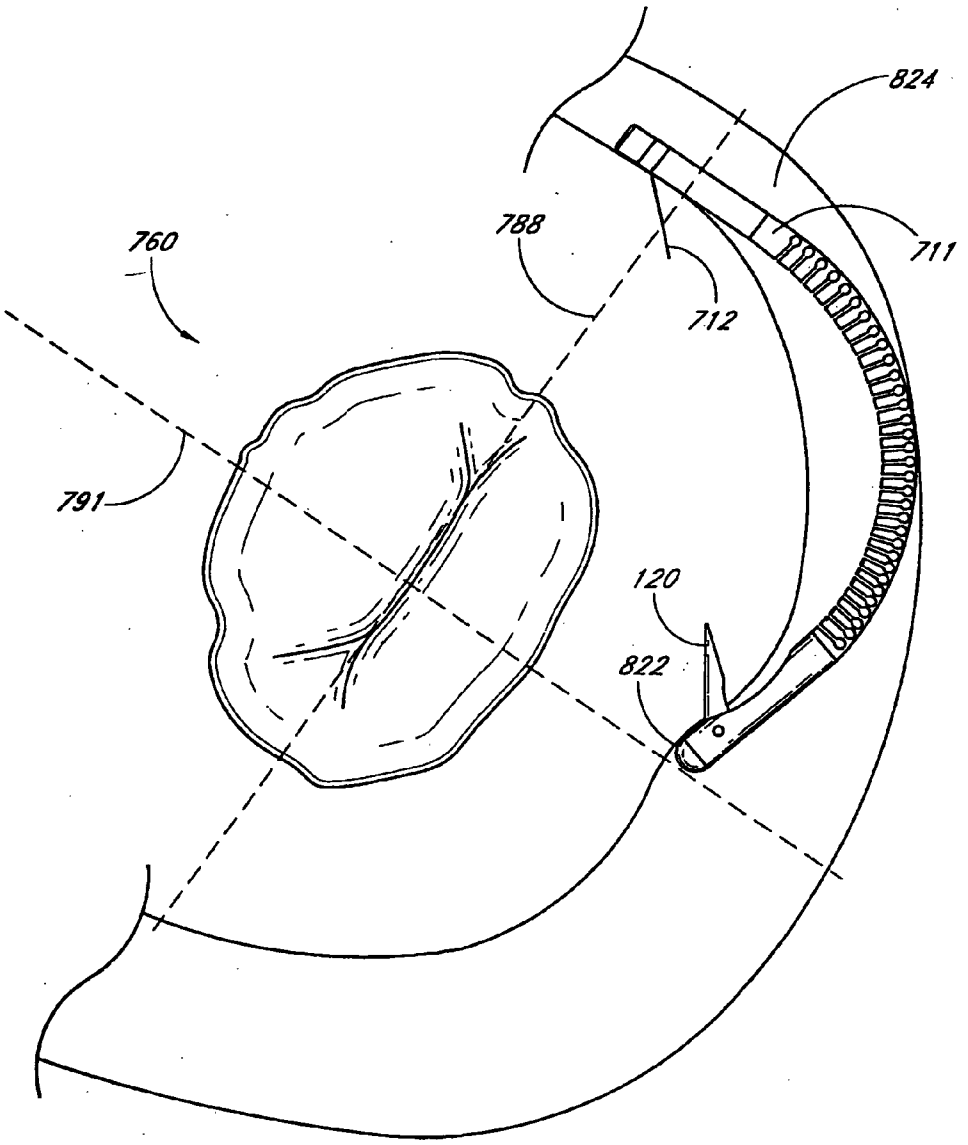

FIG. 42B

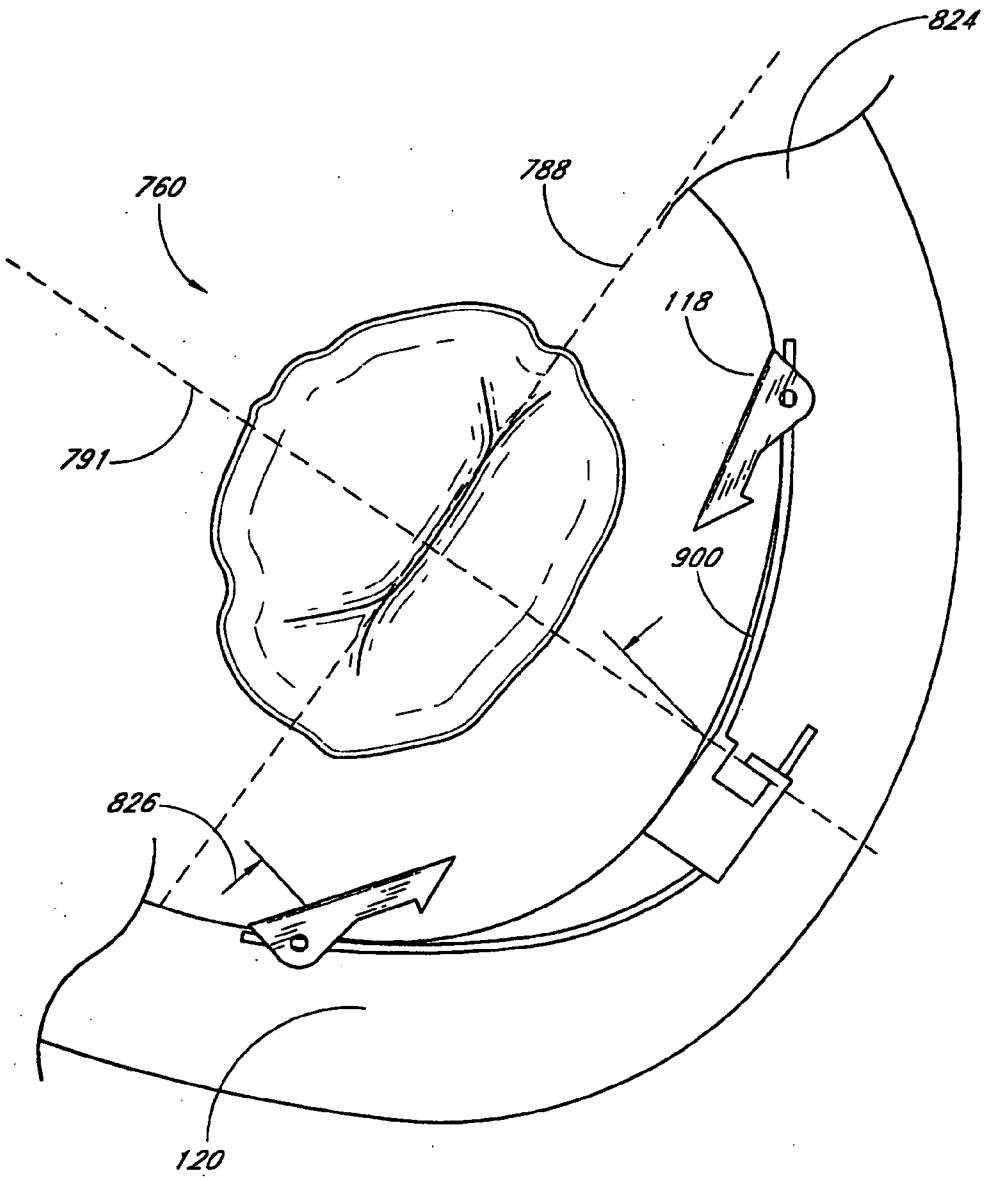

FIG. 42C

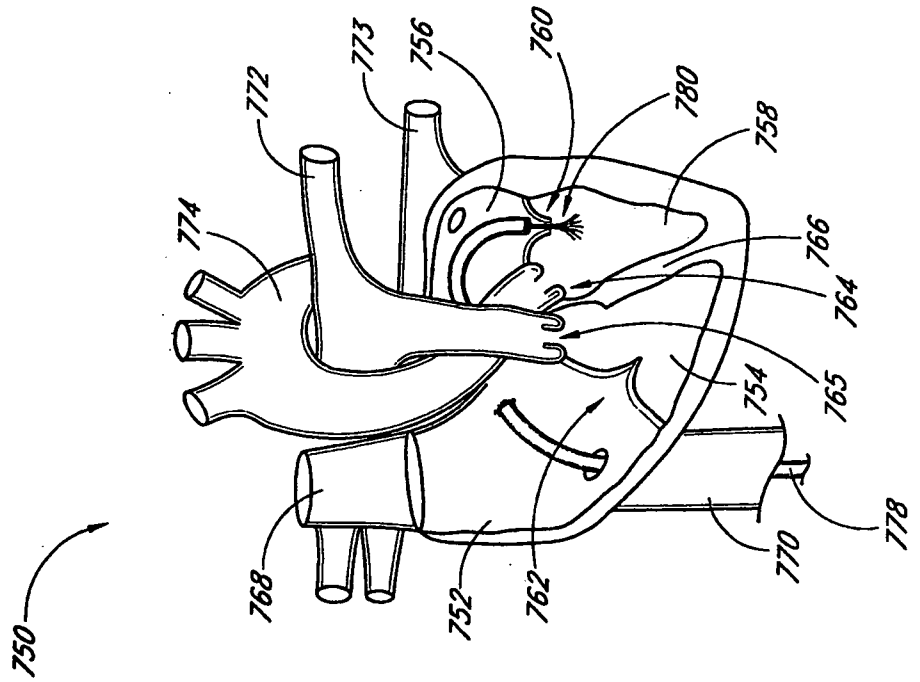
750
752
754
756
758
760
762
764
765
766
768
770
772
773
774
778
780

FIG. 43

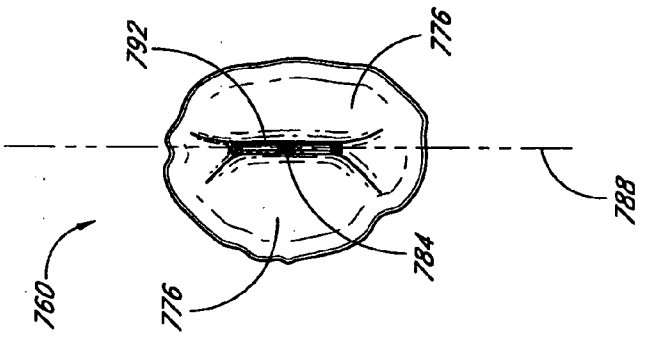

FIG. 44A

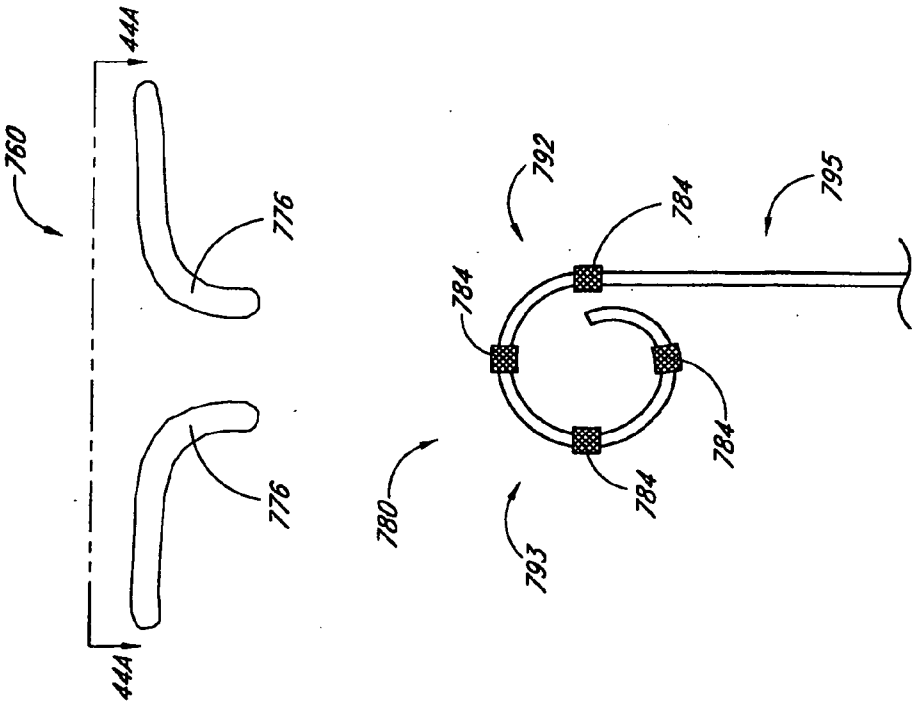

FIG. 44

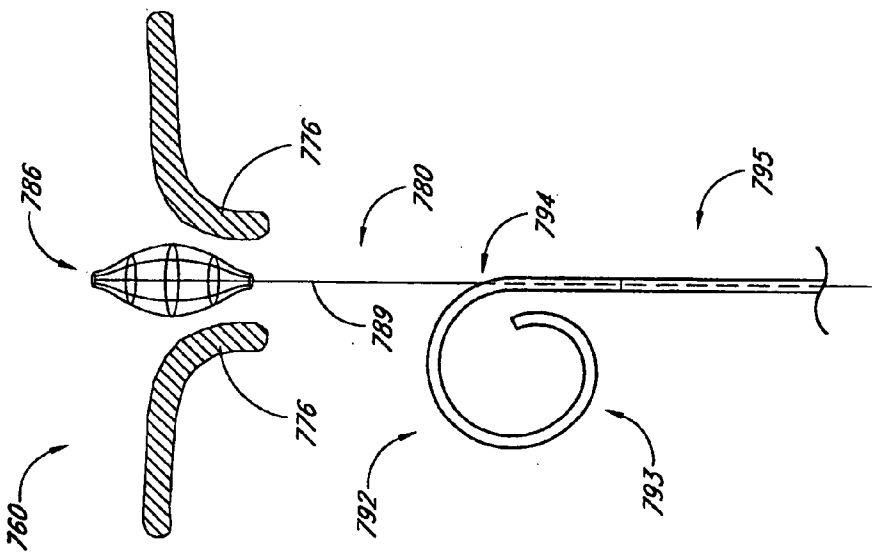

FIG. 45

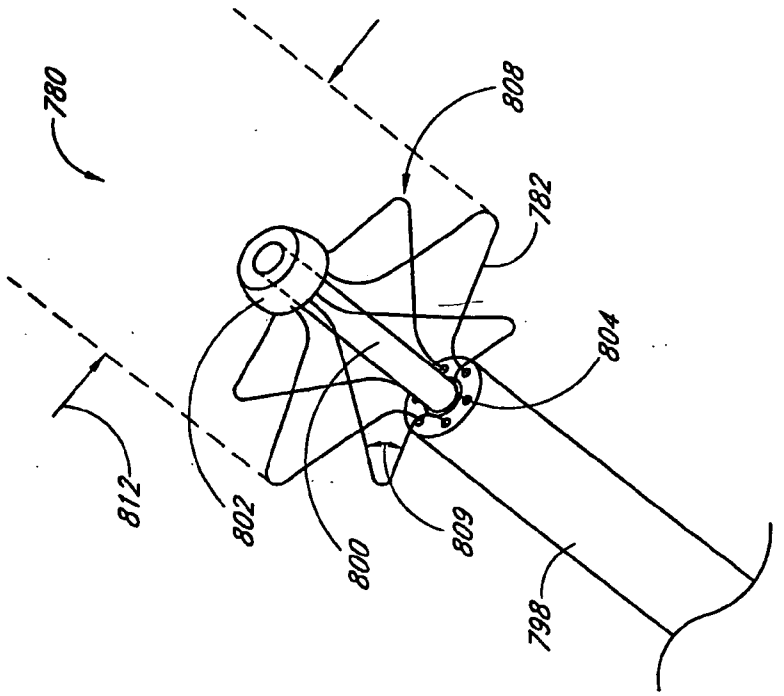

FIG. 47

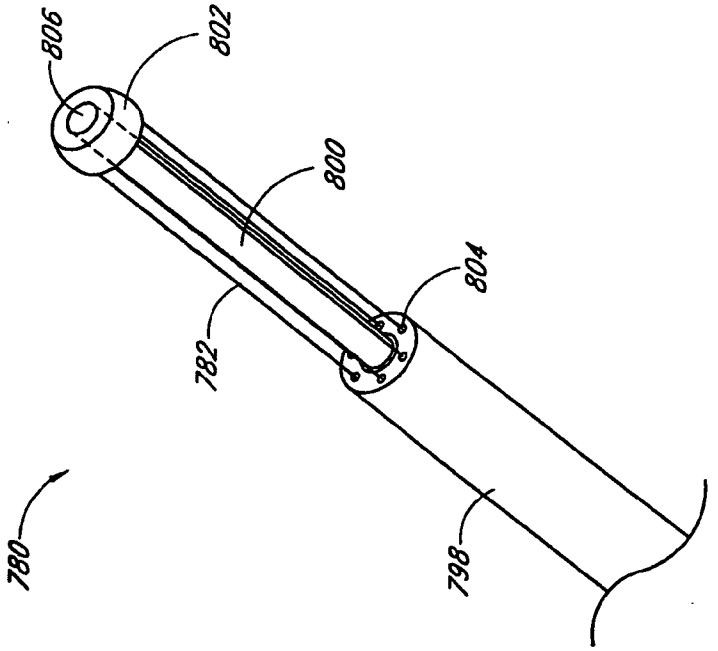

FIG. 46

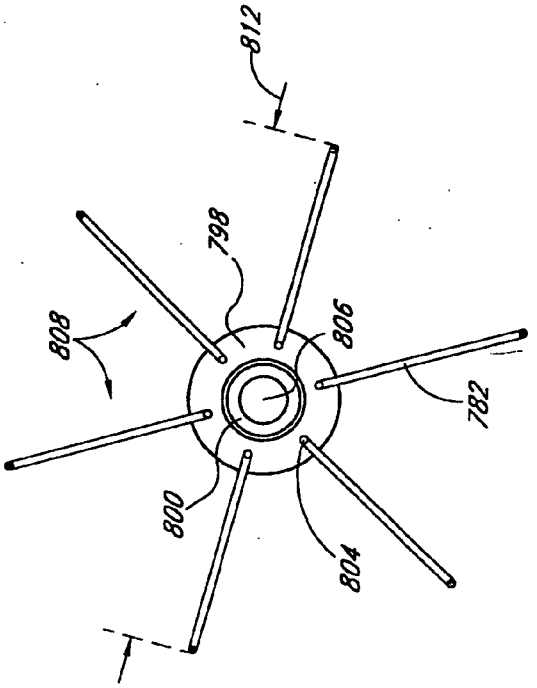

FIG. 48A

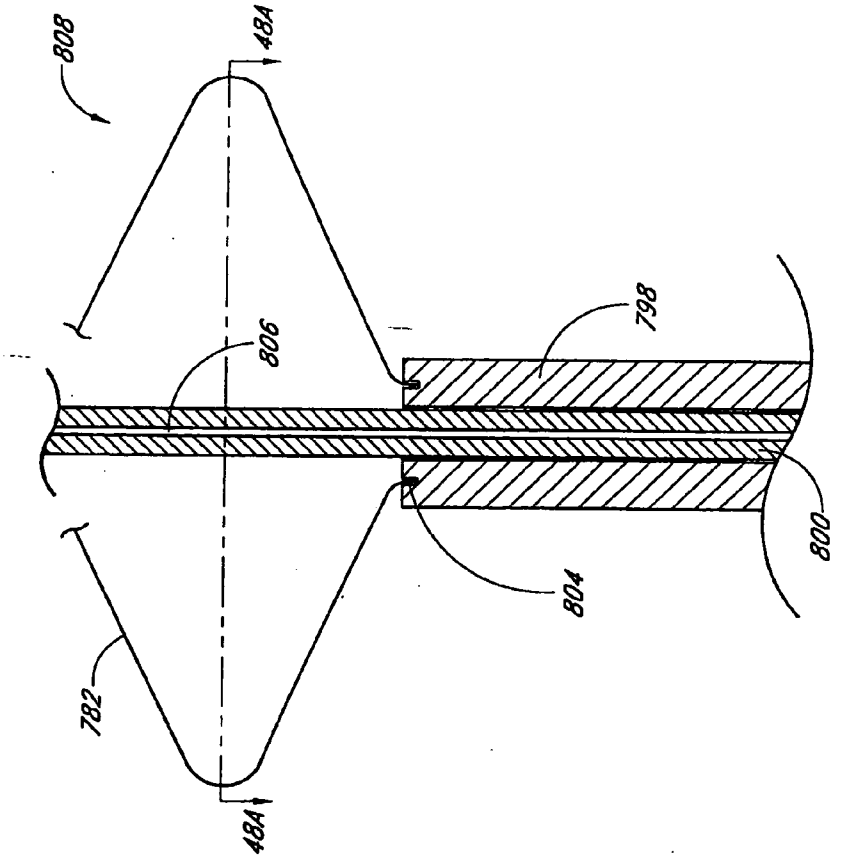

FIG. 48

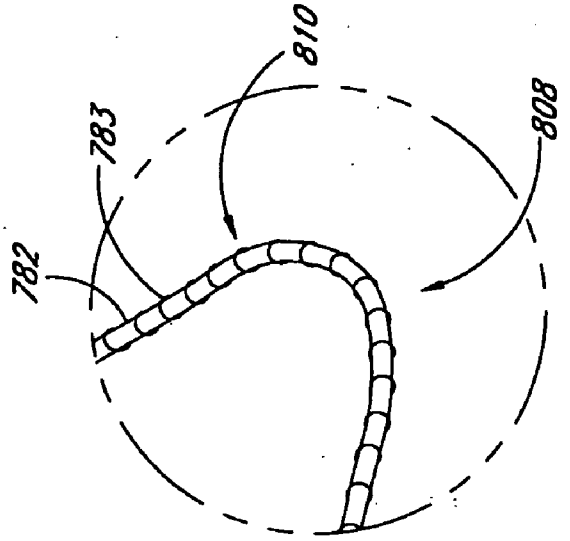

FIG. 48C

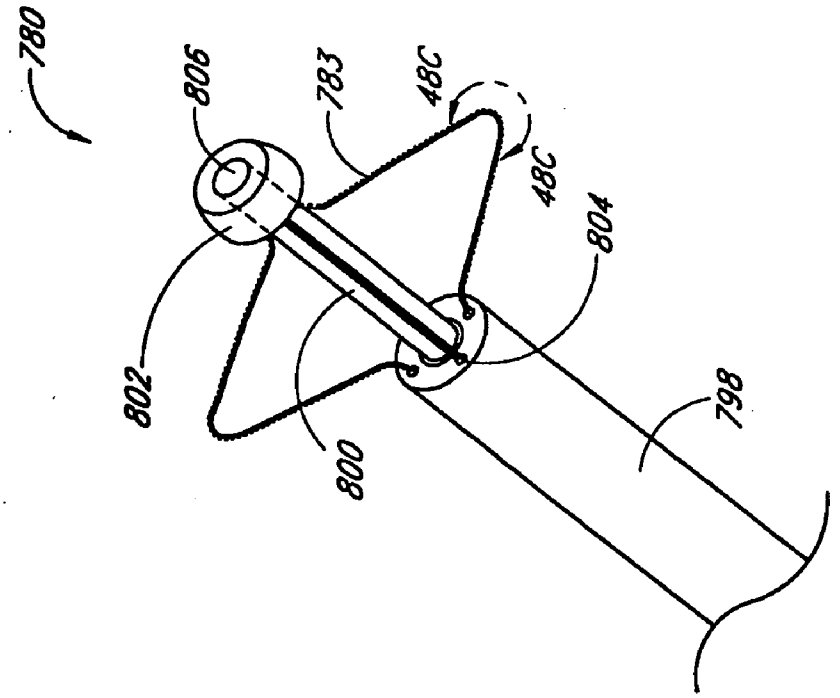

FIG. 48B

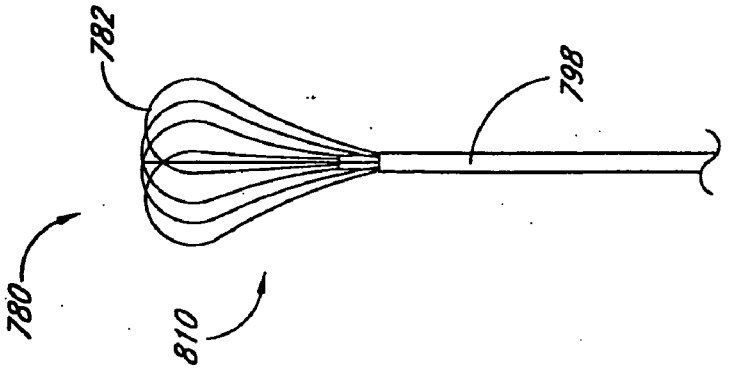

FIG. 49C

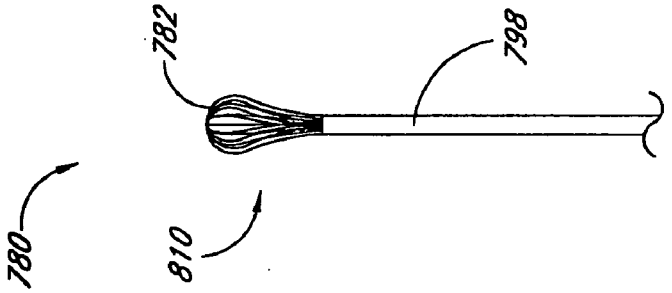

FIG. 49B

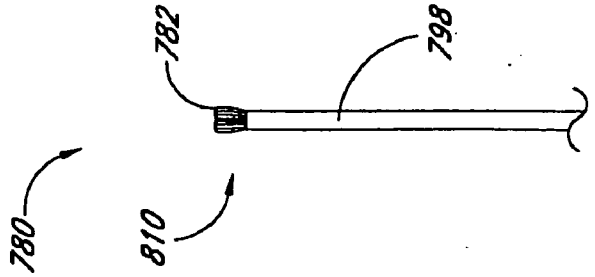

FIG. 49A

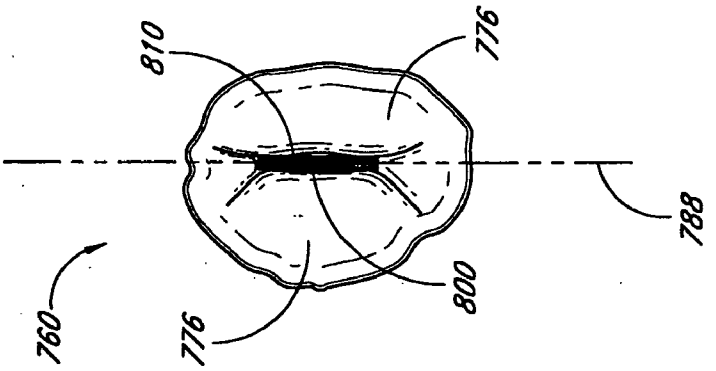

FIG. 50

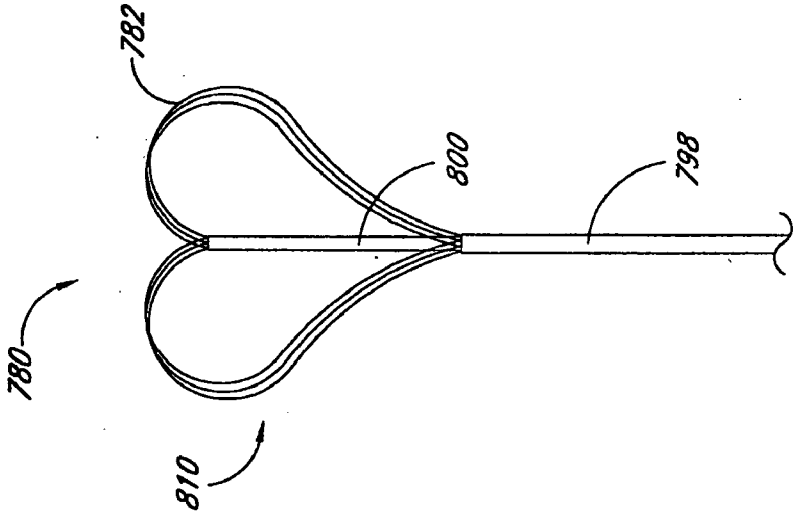

FIG. 49E

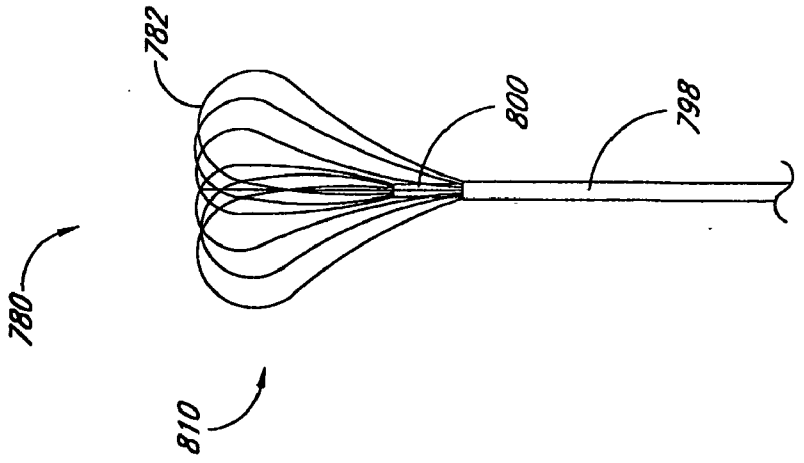

FIG. 49D

HEART VALVE LEAFLET LOCATOR

CROSS-REFERENCE TO RELATED APPLICATION

[0001] The present application is a divisional of co-pending, commonly assigned U.S. patent application Ser. No. 10/688,712, filed Oct. 17, 2003, which is incorporated by reference herein in its entirety.

BACKGROUND OF THE INVENTION

[0002] 1. Field of the Invention

[0003] The present invention relates to methods and intravascular apparatus for determining information about a valve, including the orientation of the coaptation axis of a valve, between corresponding valve leaflets.

[0004] 2. Description of the Related Art

[0005] A wide variety of transvascular procedures are known, for evaluating and treating a variety of relatively static conditions within the vasculature, such as aneurysms and partial or total occlusions. More recently, transvascular procedures have been developed, which call for evaluation and treatment of dynamic structures such as fully or partially operating valves. The present applicants believe that certain of these therapies can be optimized if it were possible to determine dynamic information about the valve, such as the coaptation axis and related leaflet orientation. The applicants believe that by determining the orientation of certain particular heart valve leaflets, the diagnosis and therapy of certain congestive heart failure patients may be improved.

[0006] Dilated cardiomyopathy occurs as a consequence of many different disease processes that impair myocardial function, such as coronary artery disease and hypertension. The left ventricle enlarges and the ejection fraction is reduced. The resulting increase in pulmonary venous pressure and reduction in cardiac output cause congestive heart failure. Enlargement of the mitral annulus and left ventricular cavity produce mitral valvular insufficiency. This in turn, causes volume overload that exacerbates the myopathy, leading to a vicious cycle of progressive enlargement and worsening mitral regurgitation.

[0007] According to recent estimates, more than 79,000 patients are diagnosed with aortic and mitral valve disease in U.S. hospitals each year. More than 49,000 mitral valve or aortic valve replacement procedures are performed annually in the U.S., along with a significant number of heart valve repair procedures.

[0008] Various surgical techniques have been developed to repair a diseased or damaged valve. One repair technique which has been shown to be effective in treating incompetence, particularly of the mitral and tricuspid valves, is annuloplasty, in which the effective size of the valve annulus is contracted by attaching a prosthetic annuloplasty ring to the endocardial surface of the heart around the valve annulus. The annuloplasty ring comprises an inner substrate of a metal such as stainless steel or titanium, or a flexible material such as silicone rubber or Dacron cordage, covered with a biocompatible fabric or cloth to allow the ring to be sutured to the heart tissue. The annuloplasty ring may be stiff or flexible, may be split or continuous, and may have a variety of shapes, including circular, D-shaped, C-shaped, or kidney-shaped. Examples are seen in U.S. Pat. Nos. 4,917,698, 5,061,277, 5,290,300, 5,350,420, 5,104,407, 5,064,431, 5,201,880, and 5,041,130, which are incorporated herein by reference.

[0009] Annuloplasty rings may also be utilized in combination with other repair techniques such as resection, in which a portion of a valve leaflet is excised, the remaining portions of the leaflet are sewn back together, and a prosthetic annuloplasty ring is then attached to the valve annulus to maintain the contracted size of the valve. Other valve repair techniques in current use include commissurotomy (cutting the valve commissures to separate fused valve leaflets), shortening mitral or tricuspid valve chordae tendonae, reattachment of severed mitral or tricuspid valve chordae tendonae or papillary muscle tissue, and decalcification of the valve leaflets or annulus. Annuloplasty rings may be used in conjunction with any repair procedures where contracting or stabilizing the valve annulus might be desirable.

[0010] Although mitral valve repair and replacement can successfully treat many patients with mitral valvular insufficiency, techniques currently in use are attended by significant morbidity and mortality. Most valve repair and replacement procedures require a thoracotomy, usually in the form of a median sternotomy, to gain access into the patient's thoracic cavity. A saw or other cutting instrument is used to cut the sternum longitudinally, allowing the two opposing halves of the anterior or ventral portion of the rib cage to be spread apart. A large opening into the thoracic cavity is thus created, through which the surgical team may directly visualize and operate upon the heart and other thoracic contents. Alternatively, a thoracotomy may be performed on a lateral side of the chest, wherein a large incision is made generally parallel to the ribs, and the ribs are spread apart and/or removed in the region of the incision to create a large enough opening to facilitate the surgery.

[0011] Surgical intervention within the heart generally requires isolation of the heart and coronary blood vessels from the remainder of the arterial system, and arrest of cardiac function. Usually, the heart is isolated from the arterial system by introducing an external aortic cross-clamp through a sternotomy and applying it to the aorta to occlude the aortic lumen between the brachiocephalic artery and the coronary ostia. Cardioplegic fluid is then injected into the coronary arteries, either directly into the coronary ostia or through a puncture in the ascending aorta, to arrest cardiac function. The patient is placed on extracorporeal cardiopulmonary bypass to maintain peripheral circulation of oxygenated blood.

[0012] Of particular interest in the present application are techniques for the repair and replacement of the mitral valve. The mitral valve, located between the left atrium and left ventricle of the heart, is most easily reached through the wall of the left atrium, which normally resides on the posterior side of the heart, opposite the side of the heart that is exposed by a median sternotomy. Therefore, to access the mitral valve via a sternotomy, the heart is rotated to bring the left atrium into an anterior position. An opening, or atriotomy, is then made in the right side of the left atrium, anterior to the right pulmonary veins. The atriotomy is retracted by means of sutures or a retraction device, expos-

ing the mitral valve adjacent to the atriotomy. One of the previously identified techniques may then be used to repair or replace the valve.

[0013] An alternative technique for mitral valve access has been used when a median stemotomy and/or rotational manipulation of the heart are inappropriate. In this technique, a thoracotomy is made in the right lateral side of the chest, usually in the region of the fourth or fifth intercostal space. One or more ribs may be removed from the patient, and other ribs near the incision are retracted outward to create a large opening into the thoracic cavity. The left atrium is then exposed on the posterior side of the heart, and an atriotomy is formed in the wall of the left atrium, through which the mitral valve may be accessed for repair or replacement.

[0014] Using such open-chest techniques, the large opening provided by a median stemotomy or right thoracotomy enables the surgeon to see the mitral valve directly through the left atriotomy, and to position his or her hands within the thoracic cavity in close proximity to the exterior of the heart for cannulation of the aorta and/or coronary arteries to induce cardioplegia, manipulation of surgical instruments, removal of excised tissue, and introduction of an annuloplasty ring or a replacement valve through atriotomy for attachment within the heart.

[0015] Mitral valve surgery, including mitral annuloplasty, is usually applied to patients with intrinsic disease of the mitral apparatus. As described, above, these patients may have scarring, retraction, tears or fusion of valve leaflets as well as disorders of the subvalvular apparatus. Definitive repair requires direct visualization of the valve.

[0016] Patients who develop mitral regurgitation as a result of dilated cardiomyopathy do not always have intrinsic mitral valve disease. Regurgitation occurs as the result of the leaflets being moved back from each other by the dilated annulus. The ventricle enlarges and becomes spherical, pulling the papillary muscles and chordae away from the plane of the valve and further enlarging the regurgitant orifice. In these patients, correction of the regurgitation does not require repair of the valve leaflets themselves, but simply a reduction in the size of the annulus and the sphericity of the left ventricle.

[0017] Mitral annuloplasty without repair of the leaflets or chordae has been shown to be effective in patients with dilated cardiomyopathy who are refractory to conventional medical therapy. Dr. Steve Bolling, at The University of Michigan and coworkers have operated on a cohort of such patients with New York Heart Association Class III and IV symptoms. Average symptom severity decreased from 3.9 preoperatively to 2.0 after surgery. Hemodynamics and ejection fraction improved significantly. Other investigators have achieved similar results as well. However, the morbidity, risks and expense of surgical annuloplasty are very high in patients with cardiomyopathy and congestive heart failure. Thus, a variety of new techniques for the treatment of congestive heart failure are being explored as adjuncts to drug therapy.

[0018] Several cardiac restraint devices have been described. U.S. Pat. No. 5,702,343 to Alferness discloses a cardiac reinforcement device that is applied as a jacket over the epicardium in order to limit diastolic expansion. However, this requires an open chest operation to implant and does not directly affect the diameter of the mitral annulus. Another approach is disclosed in U.S. Pat. No. 5,961,440 to Schweich, et al., in which tension members are placed through opposite walls of the heart such that they span the ventricle. Less invasive and "minimally" invasive techniques for valve repair and replacement continue to evolve, both on a stopped heart and on a beating heart. These techniques may provide some benefits over open chest procedures, but they are still attended by significant morbidity and mortality risks.

[0019] A need therefore remains for improved methods and devices for treating valvular disease and malformation, such as mitral valvular insufficiency, which are attended by significantly lower morbidity and mortality rates than are the current techniques, and therefore would be well suited to treat patients with dilated cardiomyopathy. Optimally, the procedure can be accomplished through a percutaneous, transluminal approach.

SUMMARY OF THE INVENTION

[0020] There is provided in accordance with one aspect of the present invention, a method of determining the coaptation axis of a valve. The method comprises the steps of positioning a device within the valve, the device being movable in response to opening and closing of the valve. The device is observed when the valve is closed, to determine the orientation of the coaptation axis.

[0021] The positioning step may comprise transluminally positioning, such as through the aortic valve and into the mitral valve. Alternatively, the positioning step may comprise transluminally advancing the device into the right atrium and across the atrial septum into the mitral valve.

[0022] The device may comprise a plurality of radiopaque markers, and the positioning step comprises positioning the plurality of radiopaque markers within the valve such that the markers will align with the coaptation axis upon closing of the valve.

[0023] In accordance with another aspect of the present invention, there is provided a method of positioning an implant within the coronary sinus. The method comprises the steps of positioning a radiopaque device within the mitral valve. The radiopaque device is visualized, to determine a coaptation axis of the mitral valve The implant is thereafter positioned within the coronary sinus, in a preselected relationship relative to the coaptation axis.

[0024] Preferably, the radiopaque device is movable in response to closing of the mitral valve. The device may comprise a plurality of radiopaque markers, which align in response to closing of the valve to conform to the coaptive edges of the valve leaflets. In one implementation of the invention, the positioning an implant step comprises positioning the implant such that it applies pressure on the P2 leaflet of mitral valve.

[0025] In accordance with another aspect of the present invention, there is provided a method of determining the coaptation axis of the mitral valve. The method comprises the steps of advancing the distal end of a catheter through the left ventricle to a position adjacent the mitral valve. A radiopaque target is deployed from the distal end of the catheter, and the alignment of the radiopaque target in

response to closing of the mitral valve is observed. The radiopaque target may comprise a plurality of radiopaque markers, such as a plurality of wires. The wires may be in the form of a collapsible basket.

[0026] In accordance with another aspect of the present invention, there is provided a leaflet orientation device, for determining the coaptive axis of a valve. The device comprises an elongate flexible tubular body, having a proximal end and a distal end. A conformable radiopaque target is carried by the distal end. The target is conformable in response to closing of the valve, to align with the coaptive edges of valve leaflets.

[0027] The conformable target may comprise a plurality of wires. In one embodiment, each of the plurality of wires is connected at a first end to the device, and are free at a second end. In another implementation, both the first ends and second ends of the wires are attached to the device. The conformable target may alternatively comprise a pig-tail support, or a membrane such as a wall of a collapsible balloon, each carrying at least one radiopaque marker.

[0028] The conformable target may be movable between a retracted position within the catheter, for transluminal navigation, and an extended position for determining valve leaflet orientation.

[0029] Further features and advantages of the present invention will become apparent to those of skill in the art in view of the detailed description of the preferred embodiments, which follows, when considered together with the attached drawings and claims.

BRIEF DESCRIPTION OF THE DRAWINGS

[0030] **FIG. 1** is a schematic illustration of the heart, showing one embodiment of the mitral annuloplasty device of the present invention deployed within the coronary venous system.

[0031] **FIGS. 2A and 2B** are schematic illustrations of the mitral annuloplasty device shown in **FIG. 1**, in second and first configurations.

[0032] **FIG. 3** is a side elevational view of an implant and deployment catheter according to the invention.

[0033] **FIG. 4** is a segmented view of the assembly shown in **FIG. 3**, and shows an enlarged fragmentary view of an implant attachment region of the assembly.

[0034] **FIG. 5** shows a transverse cross-sectional view taken along line **5-5** in **FIG. 4**.

[0035] **FIG. 6** shows a perspective view of a proximal region of an implant according to the invention.

[0036] **FIG. 7** shows a partially cross-sectioned side view of a region of a device assembly similar to that shown in **FIG. 6**.

[0037] **FIG. 8A** shows a partially cross-sectioned side view of an implant, in a first configuration during a first mode of use.

[0038] **FIG. 8B** shows a similar view as that shown in **FIG. 8A**, with the implant in a second configuration during a second mode of use.

[0039] FIGS. **9**A-B show side elevational schematic views of a distal end portion of a delivery assembly coupled to an elongate body, and show the elongate body during two modes of operation, respectively.

[0040] **FIG. 9C** shows a side elevational view of a portion of the implant shown in **FIG. 9A**.

[0041] **FIG. 9D** shows a cross sectional view taken along line **9**D-**9**D in **FIG. 9C**, showing an interlocking transverse slot pattern.

[0042] **FIG. 9E** shows a cross-sectional view through the line **9**E-**9**E of **FIG. 9D**.

[0043] **FIG. 9F** is a fragmentary cross sectional view of a connection between a forming or deflection element and an elongate body.

[0044] **FIG. 9G** shows a fragmentary schematic view of two interlocking segments according to one specific mode for the elongate body shown in FIGS. **9**A-F.

[0045] **FIG. 10** is a bottom plan view of an alternative medical device including a delivery assembly, comprising a handle assembly and a shaft, and an implant configured for remodeling a mitral valve.

[0046] **FIG. 11** is a cross section of the shaft of the medical device of **FIG. 10** taken along the view line **11-11** of **FIG. 10**.

[0047] **FIG. 12** is an enlarged view of a portion of the medical device of **FIG. 10**, including the implant and a connection assembly for removably connecting the implant to the delivery assembly.

[0048] **FIG. 13** is an enlarged view of the connection assembly of the medical device of **FIG. 12**.

[0049] **FIG. 13A** is a cross section view of the male connector of **FIG. 13**.

[0050] **FIG. 13B** is a cross section view taken along view line **13**B-**13**B of **FIG. 13**.

[0051] **FIG. 13C** is a partial cross section view taken along view line **13**C-**13**C of **FIG. 13A**.

[0052] **FIG. 13D** is a cross section view taken along view line **13**D-**13**D of **FIG. 13**.

[0053] **FIG. 14** is a plan view of a rotational driver of the delivery assembly of the medical device of **FIG. 10**, viewed apart from the medical device.

[0054] **FIG. 15** is an end elevational view of a hex-shaped distal end of the driver of **FIG. 14**, taken along the view line **15-15** of **FIG. 14**.

[0055] **FIG. 16** is a cross section view of a handle assembly of the medical device of **FIG. 10**.

[0056] **FIG. 17** is a cross sectional view taken along the view line **17-17** of **FIG. 16**.

[0057] **FIG. 18** is a plan view of a portion of the handle assembly of **FIG. 16** taken along the line **18-18** of **FIG. 16**.

[0058] **FIG. 19** is a plan view of a slot pattern for an implant such as that of **FIG. 10**.

[0059] **FIG. 20** is an enlarged view of the slot arrangement of **FIG. 19**.

[0060] **FIG. 21** is a cross sectional view of another implant in accordance with the present invention.

[0061] **FIG. 22** is a side elevational view of the device of **FIG. 21**, in an actuated orientation.

[0062] **FIG. 23** is a side elevational view of an implant similar to that shown in **FIG. 22**, in the implanted configuration, having an expandable basket thereon for securement in a vessel.

[0063] **FIG. 24** is a side elevational fragmentary view of an implant, illustrating a plurality of axial foreshortening voids.

[0064] **FIG. 25** is a side elevational view of an implant in accordance with the present invention, having a plurality of compression elements and/or securement members thereon.

[0065] **FIG. 26** is a side elevational view of an implant in accordance with the present invention, having an alternate compression element thereon.

[0066] **FIG. 27** is a side elevational view of an alternative implant in accordance with the present invention.

[0067] **FIG. 28** is an enlarged fragmentary cross sectional view of a portion of the implant illustrated in **FIG. 27**.

[0068] **FIG. 29** is a cross sectional fragmentary view of a distal anchor assembly in accordance with the present invention.

[0069] **FIGS. 30A** and B are schematic views of an alternate implant in accordance with the present invention.

[0070] **FIG. 31A** is a side elevational view of an alternative implant in accordance with the present invention.

[0071] **FIG. 31B** is a cross-sectional view taken along line **31**B-**31**B of **FIG. 31A**.

[0072] **FIG. 31C** is a plan view of a ratchet strip for use with the implant of **FIGS. 31A and 31B**.

[0073] **FIG. 31D** is a plan view of a disconnect subassembly for use with the ratchet strip of FIGS. **31**A-C.

[0074] **FIG. 31E** is a cross-sectional view taken along line **31**E-**31**E in **FIG. 31D**.

[0075] **FIG. 31F** is a plan view showing the catheter coupling of the implant of FIGS. **31**A-B

[0076] **FIG. 32A** is a cross-sectional view of a proximal deployment handpiece.

[0077] **FIG. 32B** is a partial cross-sectional view of the proximal deployment handpiece of **FIG. 32A** rotated 90 degrees.

[0078] **FIG. 33** is a side elevational view of an alternative implant in accordance with the present invention.

[0079] **FIG. 34** is a side elevational close-up view of the distal end of the implant of **FIG. 33**.

[0080] **FIG. 35** is a side elevational close-up view of the proximal end of the implant of **FIG. 33**.

[0081] **FIG. 36** is a side elevational cutaway view of an alternative implant in accordance with the present invention.

[0082] **FIG. 37** is a close-up view of the proximal end of the implant of **FIG. 36**.

[0083] **FIG. 38** is a partial cross sectional view of the heart illustrating an aortic approach to the mitral valve.

[0084] **FIG. 38A** is the mitral valve of **FIG. 38** in a closed position, as viewed from the left atrium, also known as the "short axis" view.

[0085] **FIG. 38B** is the tricuspid valve of **FIG. 38** in a closed position, as viewed from the right atrium.

[0086] **FIG. 38C** is the aortic valve of **FIG. 38** in a closed position, as viewed from the aorta.

[0087] **FIG. 38D** is a cross sectional view of the mitral valve (also known as the "long axis" view) of **FIG. 38A** taken along cut line **38**D-**38**D.

[0088] **FIG. 38E** is the mitral valve of **FIG. 38** in an opened position, as viewed from the left atrium.

[0089] **FIG. 38F** is a cross sectional view of the mitral valve of **FIG. 38E** taken along cut line **38**F-**38**F.

[0090] **FIG. 39** is a partial cross sectional view of the heart and a deployed leaflet locator in accordance with one embodiment of the present invention.

[0091] **FIGS. 40A through 40E** illustrate deployment catheters for deploying a conformable target within a valve.

[0092] **FIG. 41A** is a close-up schematic cross sectional view of the mitral valve during diastole and deployed leaflet locator of **FIG. 39**.

[0093] **FIG. 41B** is a close-up view of the mitral valve during diastole and another embodiment of a deployed leaflet locator.

[0094] **FIG. 42** is a view of the mitral valve during systole and leaflet locator of **FIG. 41A** taken along view line **42**-**42**.

[0095] **FIG. 42A** is a partial cross sectional view of the heart illustrating the mitral valve and a prosthesis inserted into the coronary sinus aligned with respect to the transverse pressure axis of the mitral valve.

[0096] **FIG. 42B** is another partial cross sectional view of the heart illustrating the mitral valve and a prosthesis inserted into the coronary sinus aligned with respect to the transverse pressure axis of the mitral valve.

[0097] **FIG. 42C** is another partial cross sectional view of the heart illustrating the mitral valve and a prosthesis inserted into the coronary sinus aligned with respect to the coaptation axis of the mitral valve.

[0098] **FIG. 43** is a partial cross sectional view of the heart illustrating a transeptal approach to the mitral valve.

[0099] **FIG. 44** is a partial cross sectional view of the mitral valve and another embodiment of a leaflet locator, prior to deployment into the mitral valve.

[0100] **FIG. 44A** is the mitral valve and leaflet locator of **FIG. 44** positioned within the mitral valve, taken along view line **44**A-**44**A.

[0101] **FIG. 45** is a partial cross sectional view of the mitral valve and another embodiment of a leaflet locator.

[0102] **FIG. 46** is a perspective view of a leaflet locator in a delivery configuration in accordance with another embodiment of the present invention.

[0103] **FIG. 47** is a perspective view of the leaflet locator of **FIG. 46**, shown in a deployed configuration.

[0104] **FIG. 48** is a cross sectional view of the leaflet locator of **FIG. 47**.

[0105] **FIG. 48A** is a cross sectional view of the leaflet locator of **FIG. 48** taken along cut line **48**A-**48**A.

[0106] **FIG. 48B** is a perspective view of another embodiment of a leaflet locator in accordance with the present invention.

[0107] **FIG. 48C** is a close-up view of a locating wing of the leaflet locator of **FIG. 48B** taken along view line **48**C-**48**C.

[0108] FIGS. **49**A-E are side views of another embodiment of a leaflet locator shown at different stages of deployment in accordance with the present invention.

[0109] **FIG. 50** is the mitral valve in a closed position and the leaflet locator of **FIG. 49E**, as viewed from the left atrium.

DETAILED DESCRIPTION OF THE PREFERRED EMBODIMENT

[0110] Preferred embodiments of the present invention include a method and apparatus for performing mitral annuloplasty and remodeling of the left ventricle using a device that may be introduced percutaneously, and placed within the coronary venous system of the heart. The device exerts compressive force on the mitral annulus and left ventricle, reducing the severity of mitral regurgitation and the size of the left ventricular cavity. The device thus enables reduction of the mitral annulus and constraint of the diastolic expansion of the left ventricle yet without the morbidity and other risks associated with open chest surgery. Additional details are disclosed in the parent application Ser. No. 10/066,302, filed on Jan. 30, 2002, the disclosure of which is incorporated in its entirety herein by reference.

[0111] The present inventors have determined that the coronary sinus and veins provide an ideal conduit for the positioning of an intravascular prosthesis, or implant, for remodeling the mitral annulus, since they are positioned adjacent the mitral annulus and interventricular septum. As used herein, the term "implant" is a broad term, and should not be limited to a permanently introduced structure or device, but could additionally be a temporarily introduced device. The coronary sinus is contained within the atrioventricular groove, and is in close proximity to the posterior, lateral and anterior aspects of the mitral annulus. The coronary sinus and coronary veins are cannulated currently during any of a variety of percutaneous transvenous diagnostic and therapeutic procedures. Permanent placement of pacemaker and defibrillator leads within the coronary sinus and veins is both safe and well tolerated.

[0112] The annuloplasty system consists of several components. Desirably, there is a delivery system intended to be introduced percutaneously into a central vein such as the internal jugular, subclavian or femoral veins and to cannulate the coronary sinus. The implant of the present invention is deployed from the delivery system, preferably a delivery catheter, into the coronary venous system or into a position within or adjacent the myocardium, to influence the annulus of the mitral valve. Additional tools may be placed through or along the delivery catheter to position the device, apply elements in place, and to control and/or cut tensioning elements (if provided) from the delivery system, as will be discussed in detail below.

[0113] Referring to **FIG. 1**, there is illustrated a schematic view of the heart **10**, having a preferred embodiment of a mitral annuloplasty and cardiac reinforcement device **40** positioned therein. The heart **10** generally comprises a right atrium **12**, in communication with the superior vena cava **14** and inferior vena cava **16**. The left ventricle **18** is positioned below the left atrial appendage **20**. Relevant portions of the coronary vasculature include the coronary sinus **22**, which extends from the ostium **24** to the junction **26** of the coronary sinus and the great cardiac vein **28**. There may be anastomotic connections **29** between the great cardiac vein **28** and the middle cardiac vein **30**, as is well understood in the art.

[0114] One embodiment of a mitral annuloplasty and cardiac reinforcement device **40** is illustrated generally in the coronary sinus **22**. In particular, the device **40** extends from a proximal end **42** to a distal end **44**. The proximal end **42** lies against the posterior aspect of the interatrial septum **46**. The midportion **48** of the device **40** is positioned within the coronary sinus **22**. The transitional section **50** of the device **40** lies at the junction **26** of the coronary sinus **22** and the great cardiac vein **28**. The distal end **44** of the device **40** is lodged in the great cardiac vein **28**.

[0115] The transitional region **50** is designed to reside in the proximal portion of the great cardiac vein **28**. By deflecting out of a plane defined by the coronary sinus **22**, it serves as an anchor **52** and prevents the device **40** from slipping out of the coronary sinus **22** when tension is applied. This embodiment of an anchor **52** is, preferably, very flaccid and flexible, thereby minimizing the risk of erosion of the device **40** through the wall of the great cardiac vein or other aspect of the coronary venous system. The proximal end **42** of the device **40** lies outside the ostium **24** of the coronary sinus **22** and is desirably curved upward so as to anchor against the posterior aspect of the interatrial septum **46**. Advantageously, the proximal end **42** of the illustrated device **40** is semicircular in shape and elliptical in profile so that no edges will promote erosion of adjacent tissue.

[0116] As an alternative anchor **52** to the distal extension of the device **40**, any of a variety of structures may be provided. In general, the deployed device **40** will contact the wall of the coronary sinus **22** along the inside radius of its arcuate path. Thus, a tissue contacting surface **54** on the concave side of the deployed device **40** may be provided with any of a variety of friction enhancing surface structures, such as a plurality of transverse ridges, teeth or other projections, or modified surface textures to enhance friction. Alternatively, tissue engaging or piercing structures such as barbs may be provided on the surface **54** to engage the wall of the coronary sinus **22** to resist movement of the device **40**, as will be discussed.

[0117] While use of such structures as anchors may provide some benefit in certain applications, embodiments herein shown and described are believed to be particularly useful in one aspect specifically because they operate without the need for such aggressive tissue engagement. It will be apparent to one of ordinary skill based upon this disclo-

sure that the present embodiments provide independent device manipulation and shape control that allow for sufficient forces to be applied to the mitral valve without requiring the possibly harmful effects of puncturing and grabbing tissue within the sinus for the remodeling process. In one regard, the independent action of a barbless design allows for adjustment in both the tightening and loosening directions with reduced risk of significant tissue damage or erosion. In another regard, devices **40** according to at least certain embodiments beneficially maintains its length throughout its modified range of shapes while the sinus and adjacent valve annulus reduce their dimensions under the force of remodeling. In still a further regard, the independent action and lack of tissue piercing and grabbing anchors allow for the device to be removed from the patient after initial implantation within the sinus, such as for example in the event of complications or in applications intended to be temporary remedial measures, such as for bridging a patient to surgery. Further to this regard, various shapes and sizes of devices may be required in a given patient before the appropriate one is found according to the observed in vivo response to implantation.

[**0118**] The specific dimensions, construction details and materials for the mitral annuloplasty and cardiac reinforcement device **40** can be varied widely, as will be appreciated by those of skill in the art in view of the disclosure herein. For example, dimensional adjustments may be made to accommodate different anatomical sizes and configurations. Materials and construction details can be varied to accommodate different tensioning mechanisms and other considerations.

[**0119**] In general, the device **40** defines an overall length from proximal end **42** to distal end **44**. Preferably, the length is within the range of from about 2 cm to about 10 cm in an embodiment such as that illustrated in **FIG. 2A** in which the anchor **52** comprises a distal extension of the body **66** for lodging within the great cardiac vein **28**. One embodiment of the device **40** includes an elongate flexible body **66** about eight centimeters in length. In such an embodiment, the body **66** may be elliptical in cross section so that it will bend in a single plane when force is applied to the tensioning element within it, as will be discussed below. Distally the device **40** tapers and transitions to a round cross-section.

[**0120**] Referring to FIGS. **2**A-B, there is illustrated an embodiment of the device **40** having a forming element **56**, such as a wire, therein. Manipulation of the forming element **56** allows the device to be moved from a flexible orientation to enable percutaneous insertion into the vascular system and navigation into the coronary sinus (**FIG. 2B**), to an arcuate configuration for compressing at least a portion of the mitral annulus (**FIG. 2A**). The device **40** may be advanced from the first, flexible configuration to the second, arcuate configuration by either axial proximal retraction or distal advancement of the forming element **56** with respect to the body **66**, depending upon the particular design.

[**0121**] In general, the device **40** comprises an elongate flexible support **58**, extending from a proximal end **42** at least as far as a point of attachment **60**. The support **58** may be a portion of the body **66** or may be a distinct component as will be discussed. The support **58** has a fixed length, and is substantially axially non-compressible and non-expandable. Thus, proximal axial retraction of the forming element **56** relative to the proximal end of the support **58** will desirably cause the support **58** to deflect in a first direction, tending to bend the body **66** about an axis transverse to the longitudinal axis of the body **66**. Distal axial advancement of the forming element **56** with respect to the support **58** will cause lateral deflection of the support **58** in a second direction, tending to permit the body **66** to straighten due to the inherent resiliency of the support **58**. This basic steering configuration can be embodied in many forms, which can be optimized by those of skill in the art to suit a particular construction for the body **66** depending upon the desired dimensions and clinical performance.

[**0122**] The forming element **56** extends from the proximal end **42** through the device **40** to the point of attachment **60**. At the point of attachment **60**, the forming element **56** is mechanically coupled, and preferably, directly coupled to the support **58**. Alternatively, other suitable methods of attachment may be used. A proximal extension **64** of the forming element **56** extends from the proximal end **42** of the device **40**, such as through an aperture **62**. Proximal retraction of the forming element **56** through the aperture **62** causes the device **40** to bend from an implantation, or delivery orientation, for navigating the coronary vasculature during implantation, to a formed, or remodeling orientation for compression and constraint of the coronary sinus **22** and adjacent structures.

[**0123**] In the formed, remodeling orientation, the device **40** preferably provides a compressive force against the mitral annulus as has been discussed. This is desirably accomplished by forming the device into an arcuate configuration. Generally, the best fit curve of constant radius to which the formed device conforms has a radius within the range of from about 1.0 cm to about 2.0 cm. The forming element may comprise any of a variety of materials and constructions, such as a polymeric or metal wire or strand, a multi-filament braided or woven line, a metal or polymeric ribbon, or other structure capable of retaining the device **40** under tension in the coronary sinus **22**.

[**0124**] The device **40** further comprises a support **58**, which may be the body **66** of the device **40** or a separate element positioned therein. In an embodiment in which the support **58** is a separate element contained within the device **40**, support **58** may comprise any of a variety of generally axially non-compressible elements such as a metal or polymeric wire or column, ribbon, or "bottomed out" (e.g., fully compressed) spring which facilitates lateral bending but inhibits axial compression upon proximal retraction of forming element **56**. A metal ribbon comprising stainless steel, nitinol, or other known materials may be desired in certain embodiments, due to its ability to influence the plane of curvature of the device **40** when in the formed orientation.

[**0125**] In the presently illustrated embodiment, the proximal extension **64** of the forming element **56** extends proximally throughout the length of a deployment catheter, to a control or free end which remains outside of the patient during the deployment procedure. Following placement of the device **40** in the coronary sinus, proximal traction on the proximal extension **64** will reconfigure the device **40** into the formed orientation within the coronary sinus, as will be discussed in connection with the method of use of preferred embodiments. After a sufficient tension has been placed on the coronary sinus **22**, the forming element **56** is preferably

locked in a fixed axial position with respect to the device **40**, to resist distal movement of the forming element **56** through aperture **62**. Any of a variety of suitable lock arrangements may be provided. Preferably, the lock **70** is provided on or near the proximal end **42**, and, in particular, at or about the aperture **62**. The lock may comprise any of a variety of structures, such as a suture knot, locking clamp or ring, an interference fit, ratchet and pawl structures, threaded engagement, an adhesive bond, or a compression fit, as will be apparent to those of skill in the art in view of the disclosure herein.

[**0126**] The lock **70** (on any of the embodiments herein) may be initially disengaged, so that the forming element **56** may be retracted or advanced freely through the aperture **62** while the physician adjusts the tension on the device **40**. After the desired tension is achieved, the lock **70** is activated to engage the forming element in a manner which will depend upon the lock design. Alternatively, the lock **70** may be biased into an engaged configuration, such as with ratchet or cam structures, so that the forming element can only be retracted proximally. Preferably, however, the lock will allow the forming element to be released so that the physician can release tension on the device **40** in the event of momentary over tightening.

[**0127**] The forming element **56** and support **58**, with or without the tubular body discussed below, may be surrounded by a tubular jacket of ePTFE or a polyester fabric such as DACRON, or other material which is wrapped or stitched onto the forming element **56** to produce the final device **40**. As a further alternative, the subassembly which includes the forming element **56**, and, if present, support **58** may be positioned within a suitable length of tubing formed such as by extrusion. The tubing may be drawn down to a reduced diameter at the distal end **44**. Additional post extrusion steps may be used to produce the desired cross-sectional configuration. Manufacturing techniques for the present invention will be apparent to those of skill in the art in view of the disclosure herein.

[**0128**] Any of a variety of additional features may be added to the device **40**, depending upon the desired clinical performance. For example, the outside surface of the body **66** may be provided with any of a variety of coatings, such as poly-paraxylene, sold under the trademark PARALENE, PTFE or others to improve lubricity; heparin or other antithrombogenic agents; elastomers such as silicone, neoprene, latex or others to soften the surface and reduce the risk of trauma to the vascular intima, and the like. Adhesion enhancing surfaces may be provided, such as ePTFE patches or jackets, to promote cellular ingrowth for long term anchoring. In addition, depending upon the deployment system design, the body **66** may be provided with a guidewire lumen extending axially therethrough, to allow the body **66** to be advanced distally over a guidewire during placement at the treatment site.

[**0129**] The device **40** may be implanted within the coronary sinus **22** either through direct surgical (e.g., thoracotomy, with or without stemotomy) access, such as in combination with another surgical procedure, via port access, or remotely by way of a percutaneous or surgical cut down access to the venous system. Preferably, the device **40** is implanted in a transluminal procedure, such as by way of a percutaneous access at one of the internal jugular, subclavian, or femoral veins.

[**0130**] **FIGS. 3-8B** illustrate an exemplary device assembly **200**. In general, **FIG. 3** is an overall view of assembly **200** that includes a delivery assembly **210** engaged to a prosthesis, or implant **250**. According to similar overall delivery systems and methods elsewhere herein described, prosthesis **250** is adapted to be delivered in a first condition and shape into a vessel at least in part by manipulation of delivery assembly **210**. Once in the desired region of the target vessel, prosthesis **250** is adapted to be adjusted to a second condition and shape within the vessel in order to influence an adjacent tissue structure. As also elsewhere herein described, a particularly beneficial mode of such operation places the prosthesis **250** within a coronary sinus for the purpose of influencing a mitral valve annulus, more specifically in order to influence the shape of the annulus in order to reduce mitral valve regurgitation.

[**0131**] **FIGS. 4-7** show the proximal aspects of device assembly **200**, and in particular various details for delivery assembly **210** that includes an outer member **215** that is preferably tubular with an inner lumen **216** that is preferably sized to house an inner member **225**. Inner member **225** in the variation shown is generally tubular and is substantially free to rotate within lumen **216**, preferably by providing rotational force to inner member **225** proximally outside of the patient's body. According to the example shown, this rotational force is applied to inner member **225** via a thumbwheel **205** that is provided on proximal hub assembly **201** coupled to proximal end portion **211** of delivery assembly **210**. Thumbwheel **205** is rotationally coupled to inner member **225** within hub assembly **201**, which rotational coupling may be achieved according to a number of adaptations as would be apparent to one of ordinary skill.

[**0132**] Rotation of inner member **225** is transmitted into rotation of a rotational coupler **280** that is engaged within a proximal end portion **252** of prosthesis **250** as follows. Inner member **225** has an aperture **228** on its distal end portion that provides a female counterpart of a mated key interface between the inner member **225** and a male counterpart, desirably provided by a shaped proximal end **281** of a rotational coupler **280** that is also rotationally engaged within a proximal end portion **252** of prosthesis **250**. The keyed fitting between inner member **225** and rotational coupler **280** allows for transmission of rotational forces to rotational coupler **280**. In order to maintain releasable axial engagement of this keyed coupling, a flexible member such as a filament **240** is looped through an aperture **283** through proximal end **281** of rotational coupler **280** with both filament ends **242** and **244** extending proximally through inner member **225** to a location in the proximal end of the catheter. The filament **240** is generally held in sufficient tension to keep the distal keyed fitting engaged, though it is further contemplated that the mere presence of the filament may provide an interference against uncoupling if there is a sufficiently tight tolerance in the male/female interface of the keyed fitting.

[**0133**] Rotational coupler **280** is rotationally engaged within proximal end portion **252** of prosthesis **250** through a proximal port, or aperture **251**, such that the rotational coupler **280** is adapted to rotate within and relative to the prosthesis **250**. This relative rotation is converted to force a deflection of prosthesis **250** into the desired shape of the second configuration in situ as follows.

[0134] According to one aspect of the rotational coupling, the prosthesis **250** is preferably held to resist rotation while rotational coupler **280** is rotated within the prosthesis **250**. This may be achieved simply by frictional forces of surrounding tissue after the prosthesis **250** has been delivered into the desired vessel such as the coronary sinus. According to another example, this may be achieved by providing a releasable interface such as a friction fit **218** between outer member **215** and proximal end portion **252** of prosthesis **250** wherein the frictional engagement of outer member **215** and prosthesis **250** are held in a relatively fixed position while inner member **225** and rotational coupler **280** are rotated. This embodiment is shown in **FIG. 4**. In addition, or in the alternative to the friction fit interface, a keyed interface may be employed as shown in **FIGS. 6-7**. According to this mode, a shaped proximal fitting **253** including a flat surface **253'** on the proximal end **252** of prosthesis **250** is adapted to mate as a male counterpart into a shaped aperture or fitting on the distal end **212** of outer member **215**. This keyed interface allows for rotational coupling between the members in a similar manner as just described for the inner member **225** and rotational coupler **280**, and may allow for a more releasable coupling with reduced friction upon axial detachment of the members.

[0135] The rotational forces from rotational coupler **280** may be converted to deflection forces on the prosthesis **250** according to one example as illustrated in FIGS. **8**A-B. Prosthesis **250** includes a generally tubular wall or body **260** that has an inner lumen **262** and extends from the proximal end portion **252** to the distal end portion **254** of prosthesis **250**. Secured along proximal end portion **252** is a nut fitting **263** that has a grooved inner bore **264** which communicates with inner lumen **262**. Further to this specific embodiment, rotational coupler **280** is a screw member with outer helical threads **285** engaged within the mating threads of an inner surface (not shown) of a bore lumen such that a distal portion of screw threads **285** extends distally within lumen **262** and terminates at a second key fitting **287** similar to the shaped proximal end portion **282** and also having an aperture **288**. Similar to the proximal end of rotational coupler **280**, another flexible member or filament **290** is looped through aperture **288** such that two arms **292**, **294** extend distally therefrom to an attachment point along distal end portion **254** of prosthesis **250**. Because nut fitting **263** is fixed in relation to outer tubular body **260**, and because that tubular body is held in a relatively fixed position as provided above, rotation of rotational coupler **280** moves coupler **280** proximally relative to body **260**. This proximal axial translation of rotational coupler **280** puts tension on filament **290**, which puts tension on the body **260** due to the distal attachment. This tension on outer body **260** forces a deflection of the body **260**. Therefore, rotational force is converted into a tensile force which, in turn, causes radial deflection of the body **260** relative to the longitudinal axis L of the device **250**. In other words, the body **260** is deflected about an axis that is transverse to the longitudinal axis L. See **FIG. 8B**.

[0136] The forced deflection described immediately above may be controlled in a particular plane by providing a composite structure within prosthesis **250** that is engineered to respond, e.g., yield, to these forces in a prescribed way. In the specific embodiment shown, a relatively noncompressible column support or spine member **270** is provided within lumen **262** of outer tubular body **260**. This spine member **270** is more rigid and more resistant to axial forces, especially tensile forces, than the material of outer tubular body **260** alone. Therefore, providing spine member **270** along only one radial position along the circumference of the prosthesis **250** creates a bias on the device **250** to deflect away from the spine **270** toward a more compressive region of the device **250**. Such composite design may further include a laminate structure, a composite structure—such as an imbedded wire reinforced wall structure, or may be achieved by engineering material variations in the device, such as for example by thinning, thickening, hardening, or softening the material at one location along the outer tubular body **260** relative to another region to urge the body **260** to deflect at a desired location.

[0137] As may be achieved by other controllable embodiments elsewhere herein described, deflection according to the present embodiment may be adjusted according to a healthcare provider's desires, and is adjustable in either direction—by either tightening the radius of curvature R or opening it. See **FIG. 8B**. According to this specific embodiment however, the adjustability of and choice between tightening and loosening of the deflection depends upon the direction and extent of rotation placed upon the rotational force transmission system.

[0138] Once the desired deflection is achieved and desired therapeutic results are observed, the prosthesis **250** may be detached from the delivery assembly **210** by severing the torque or rotational force transmission system at the keyed fitting between the inner member **225** and the rotational coupler **280**. This is accomplished by first releasing at least one arm **242**, **244** of the proximal filament **240** while withdrawing the other arm, thereby threading the filament **240** through aperture **283** (as shown in bold arrows in **FIG. 8B**) until it is unthreaded completely from the aperture **283**. This allows inner member **225** to be withdrawn proximally from rotational coupler **280** to detach and thereby implant the prosthesis **250**.

[0139] Alternatively, as with other adjustable deflection systems herein described, the prosthesis may be held in its therapeutic condition for a temporary period of time (which may nevertheless be prolonged during a hospital stay), during which time mitral valve regurgitation may be minimized, such as for example for the purpose of bridging the patient in a temporarily improved condition until other treatments may be performed, e.g. annuloplasty, valve surgery, heart transplant, etc. In this alternative temporary setting, at the appropriate time the deflected, contracted prosthesis may be adjusted back open from its cinched position around the valve, and then withdrawn without implantation by withdrawing the entire system, delivery assembly still engaged to the prosthesis. Moreover, it is further contemplated that such a temporary prosthesis may be modified to remove the detachment mechanisms herein described, which may provide for a simpler and lower cost device.

[0140] Device assembly **200** is also shown in **FIGS. 3 and 8**A-B to include a distal guidewire tracking member with a guidewire lumen **265** which is adapted to slideably engage a guidewire **230** in order to be placed in a percutaneous transluminal procedure into the desired vessel location, such as within the coronary sinus **22**. The particular guidewire lumen shown is integral within the distal aspects of prosthesis **250** as a "rapid exchange" or "monorail" design that

allows for relatively independent movement of the guidewire and catheter in vivo. Moreover, this design removes the need for the guidewire to ride coaxial through the entire device assembly **200**, as would be the case for example in an "over the wire" type system. The type shown beneficially allows for detachable engagement of prosthesis **250**, which is preferably achieved after withdrawing the optional guidewire **230** from the distal lumen **265**.

[**0141**] In each of the foregoing implantation methods, the physician preferably monitors the degree of regurgitation during the step of tightening the implant. Although any reduction in mitral regurgitation may be desirable, regurgitation is preferably reduced to something less than moderate (less than 2+). In any event, at least a one grade reduction is preferably achieved. On the other hand, reconfiguration of the implant **250** is desirably not accomplished to an extent sufficient to produce mitral stenosis, or any flow limitation of hemodynamic significance.

[**0142**] Thus, the method of implantation preferably further comprises the steps of monitoring the degree of mitral regurgitation during, and preferably also before and following the implantation and/or reconfiguration steps. The degree of mitral regurgitation may be monitored such as by transesophageal echo cardiography, intracardiac echo cardiography, fluoroscopy using radiocontrast in the left ventricle (LVgram), or left atrial or pulmonary capillary wedge pressure tracings, as are understood in the art, during the incremental restriction of the mitral annulus and/or left ventricle step. Once a sufficient reduction in regurgitation has been achieved for a particular patient in the physician's judgement, the device **250** may be locked and the delivery assembly **210** detached from the device **250** and removed from the patient.

[**0143**] The method may additionally comprise the step of measuring the coronary sinus **22** and/or other coronary vein, and selecting an appropriately sized implant **250** from an array of implants of varying sizes. Such parameters may include diameter, length, or radius of curvature of the arc of the sinus. The appropriately sized implant **250** is thereafter positioned within the target vein. The implant **250** is thus preferably provided in a graduated array of sizes, so that the optimal size can be selected for each patient. The size of the coronary sinus **22** or other vein can be measured using any of a variety of techniques, such as echo cardiogram, MRI, CT Scan, or angiography as is understood in the art. Moreover, as is apparent to one of ordinary skill, measuring a parameter of the coronary sinus **22** generally provides indicia of certain parameters of the mitral valve and its annulus, such as for example mitral valve diameter, in which case either the coronary sinus parameter or the mitral valve parameter may provide the requisite information for choosing an appropriately dimensioned device **250** from the kit.

[**0144**] It follows that such mitral valve parameters may further be measured directly, such as by various of the methods just described, in order to generate the values used for choosing the appropriate device **250**. Once a parameter for an anatomical feature is measured as herein described, its value is generally estimated according to the accuracy of the respective measuring tool—it is contemplated that persons without specialized medical skills or training can choose the appropriate medical device **250** from the kit once armed with this estimated value. For example, packaging for each device **250** of the kit may indicate the respective dimensions that are unique to that device **250** with respect to other devices of the kit, and the estimated value of the measured anatomical parameter may simply be compared.

[**0145**] It is contemplated and apparent that various of the embodiments herein described are adapted to accomplish manipulation of the coronary sinus **22** for mitral annulus reduction without substantially altering the length of the device **250** within the sinus **22**. This may provide a benefit by increasing the useful purchase of the device **250** along the coronary sinus **22** and circumferentially around the mitral annulus as the sinus length and/or annulus diameter may be reduced during remodeling from the radial deflection of the prosthetic device **250**. This may also mean that the dimension of the device **250** in a kit of devices may not directly correspond to the estimated value of the anatomical parameter that is measured. For example, the compared value of the measured device parameter may be shorter than an estimated coronary sinus **22** length due to a possible shortening of the sinus **22** during device **250** treatment. Or, the anatomical parameter may be estimated from an initial value based upon an anticipated or desired final result from treatment and such procedurally related value be used for choosing the appropriate device (e.g. comparing an estimated final length of the sinus or mitral valve diameter with a known dimension of the device in the remodeling configuration when used in situ).

[**0146**] As a further aspect to the present invention, the implant **250** is preferably combined with an appropriate drug therapy for treating congestive heart failure. Residual regurgitation and other hemodynamic functions are preferably measured following implantation of the implant of the present invention. Heart medications are preferably adjusted to take into account the reduction in regurgitation and/or reduction in left ventricle volume in formulating an ongoing drug therapy for the patient.

[**0147**] Still further, the present invention contemplates temporary use in the sinus **22** for mitral valve remodeling as a bridging regime in combination with other permanent treatments such as more conventional annuloplasty or valve replacement via surgery. Such combined systems of devices **250** and respective methods of use, which may further be combined with the pharmaceutical drug regimes, provide an overall treatment regime that can provide a highly beneficial result for management of patients with harmful mitral valve regurgitation.

[**0148**] Any of the embodiments discussed herein may additionally be provided with one or more externally facing electrically conductive axially extending strips or annular bands, to enable the device **40** to function additionally as a cardiac pacing or other diagnostic or therapeutic cardiac electrode. The electrically conductive band or bands are placed in electrical communication with a pacing source or diagnostic instrument by way of one or more electrical conductors extending away from the device **40**. The conductors may be electrically connected to any of a wide variety of electronic cardiac rhythm management devices, which are well known in the art.

[**0149**] As shown in one embodiment in **FIGS. 9A and 9B**, once in the coronary sinus the elongate body **320** is adapted to be adjusted from the first implantation (flexible) configuration to a second (relatively rigid) remodeling configuration

that has a shape that is adapted to remodel the mitral valve annulus. According to the embodiment shown in **FIG. 9B**, this shape is generally adapted to provide an external force onto the annulus in order to reduce its diameter along at least one transverse axis, such as according to the arcuate shape shown that at least in part grips down onto a portion of the circumference of the valve to provide a diameter reducing force. As is also shown in phantom, the arcuate shape may take different forms in terms of degree, and in a further highly beneficial application is controllable and selectable between various or through a continuous range of degrees. Such controllability according to the embodiment shown is also selective between intermediate deflectable portions **360**, **370**, **380**, as is shown in **FIG. 9B** and will be further developed below.

[**0150**] Elongate body **320** is constructed from tubular wall **325** that extends continuously along the length of the deflectable portions **360**, **370**, **380** of the elongate body **320**. An array or plurality of distinct, discontinuous slots or voids **330** are formed within the wall **325**, each void **330** having an elongated shape that is transverse to the longitudinal axis. Voids **330** permit axial shortening of one side of the tubular wall **325**, enabling the curvature illustrated in **FIG. 9B**.

[**0151**] By further reference to the specific embodiment of FIGS. **9**A-F, transverse voids **330** have a central groove-shaped region with two adjoining portions **332**, **334** that converge at an apex **333** along the longitudinal axis. Such a shaped void **330** is defined at least in part by two opposing complementary shaped surfaces of two adjacent, longitudinally opposing portions **340**, **350** of the wall of the elongate body **320**. One of these portions **340** desirably assumes a convex shape in an axial, distal direction, and the other portion **350** is desirably concave in an axial, proximal direction around the apex **333**. These shaped surfaces **340**, **350** are preferably in a nested configuration with the convex portion **340** positioned within the concave portion **350**. In this arrangement, lateral (rotational) movement of one of the adjacent wall portions **340**, **350** relative to the other portion **340**, **350** is substantially prevented by a mechanical interference with the other adjacent portion **340**, **350**. The relative nesting of adjacent portions **340**, **350** of the elongate body **320** provides a mechanical interference to radial deflection along a first plane and substantially isolates deflection of the elongate body **320** along a second plane upon application of axial bending forces.

[**0152**] **FIG. 9D** shows grooved voids **330** in plan view for the purpose of simplifying the illustration for better understanding. However, as depicted in **FIG. 9C** and by reference to **FIG. 9E**, these transverse voids **330** (and the generally the entire V-shaped portion herein described in detail) span across at least about 180 degrees of the circumference of the elongate body **320**. Preferably, the transverse voids **330** span across more than about 300 degrees of the circumference of the elongate body **320**, and still more preferably the voids span across between about 300 degrees and about 315 degrees of the circumference. By arranging such grooved voids in a similar alignment around the circumference of the wall **325**, an integral and continuous backbone or spine **327** is formed along wall **325** that runs axially along the length of the elongate body **320**. This overall arrangement of voids **330** and spine **327** has been observed to provide a desirable combination of bendability, due to the voided pattern, and axial integrity, due to the remaining wall structure.

[**0153**] The elongate body **320** of the implant **300** shown in FIGS. **9**A-F generally has three deflectable portions **360**, **370**, **380**, and one non-deflectable portion **310** along the longitudinal axis. Each deflectable portion **360**, **370**, **380** has a group of voids **330** as just described in order to be individually deflectable between the first and second configurations with an applied force from outside of the patient's body while the elongate body **320** is positioned within the coronary sinus. More specifically, three forming elements **365**, **375**, **385** may be coupled to the three deflectable portions **360**, **370**, **380**, respectively, in order to apply a deflection force to that portion to reshape that portion between the first and second configurations. Each forming element **365**, **375**, **385** is preferably adapted to extend externally from the patient's body when the elongate body **320** is positioned within the coronary sinus in order to be manually manipulated to apply the deflection force to the respectively coupled deflectable portion **360**, **370**, **380**. Deflection of each of these portions combined provides for the overall shape for the elongate body **320** in the second configuration.

[**0154**] Forming elements **365**, **375**, **385** are attached to elongate body **320** at unique, longitudinally spaced points of attachment **361**, **371**, **381**, respectively, that are each at or distal to the distal end of each respectively coupled deflectable portion **360**, **370**, **380**. One beneficial application is shown for the attachment of the forming members **365**, **375**, **385** to the body **320**, wherein each point of attachment **361**, **371**, **381** has two axially spaced apertures, which are shown as proximal and distal apertures **362**, **363** for point of attachment **361**, proximal and distal apertures **372**, **373** for attachment point **371**, and proximal and distal apertures **382**, **383** for point of attachment **381**. As illustrated for point of attachment **371** in **FIG. 9F**, a shaped distal end **377** for forming element **375** is sized to be seated within distal aperture **373** where it is secured by a securing agent **374** which may be an adhesive, melt bond, or solder, for example. Any or all of the respective forming elements **365**, **375**, **385** may also be welded through the apertures to the wall. Forming element **375** extends proximally from distal aperture **373** and is further secured to wall **325** by additional securing agent **374** introduced through proximal aperture **372**. The securing agent **374** may be applied in one operation from outside in through both apertures **372**, **373**. In addition, distal end **377** may also be shaped to provide a mechanical securement means for attachment during proximal axial forces, such as is shown in phantom in **FIG. 9F**.

[**0155**] According to one specific embodiment that has been observed to be useful, the apertures for this attachment embodiment are generally between about 0.020 inches and about 0.022 inches in diameter with similar longitudinal spacing, and the distal end for the seated forming elements are between about 0.012 and about 0.014 inches in diameter. Further to that embodiment, wall **325** is generally constructed from a tubular, stainless steel wall or hypotube with a plurality of grooved voids **330** formed therein according to a pattern similar to that shown and described by reference to **FIG. 9D** or elsewhere herein. The respective forming elements are soldered to the respective attachment points using gold/tin solder. Further to this embodiment, grooves such as shown and described by reference to **FIG. 9D** were formed in the underlying stainless tube by laser cutting, though other well known techniques such as hand grinding, mechanical cutting, photo-lithography, etc. may alternatively be used.

[0156] As previously described herein, the applied force from the forming elements **365**, **375**, **385** are generally an axial force between the attachment points **361**, **371**, **381** to the elongate body **320** and a proximal location (not shown) along the elongate body **320** that is proximal to that deflectable portion. According to the specific embodiments shown this force is generally between the attachment points **361**, **371**, **381** and the proximal end portion of the elongate body **320**. The elongate body **320** may generally be held during forced deflection by means of a holding device (not shown) in order to substantially fix the proximal end portion of the elongate body **320** relative to the deflectable portion so that the axial force may be applied between those portions in situ. While the proximal manipulation of the forming elements **320** in order to apply the deflection force to the deflectable portions **360**, **370**, **380** may be axial as just described, it may in another regard be rotational.

[0157] Each deflectable portion **360**, **370**, **380** is substantially axially rigid and non-compressible relative to the longitudinal axis L, and therefore the overall axial length of elongate body **320** remains substantially constant between the first and second configurations. However, each deflectable portion is relatively flexible along a radial axis transverse to the longitudinal axis such that the deflectable portion is adapted to bend radially upon application of an axial force between a distal location on the elongate body at or distal to a distal end of the deflectable portion and a proximal location along the elongate body **320** proximal to that deflectable portion. In one regard, the elongate body **320** may be generally axially non-compressible or non-expandable between each deflectable portion **360**, **370**, **380** and the proximal end portion of the elongate body **320**, such that each deflectable portion **360**, **370**, **380** is adapted to bend radially upon application of a compressive or tensile axial force, respectively, on the elongate body **320** between the distal location and a proximal location that is at the proximal end portion of the elongate body **320**.

[0158] In still a further regard, other constructions for elongate body **320** may also provide for the combination of an integral and continuous wall **325** from the proximal end portion to the distal end portion of the body and a controlled radial bending response to axially compressive or tensile forces. In addition or in the alternative to the continuous integral wall incorporating the formed voids **330**, the wall **325** may also include an engineered composite support structure with engineered support elements that are arranged to control the spatial strain response to the stress of the applied forces. Other suitable shapes for voids **330** may also be acceptable.

[0159] One particular variation of the patterned voids according to the nested V-pattern (or U-pattern) embodiment shown in FIGS. **9**A-F is shown in **FIG. 9G**, wherein the nested adjoining portions **340**, **350** include interfacing surfaces **342**, **352** that have interlocking teeth **344**, **354** which are adapted to be locked in a radially deflected pattern in the second configuration. More specifically, the interfacing pattern of teeth **344**, **354** are adapted to perform like a ratchet mechanism. By positioning this region along an inner radius of curvature during the bending of forced deflection, compressive forces bring the convexly shaped tooth region **340** deeper into the fitted well formed by the concave receiving region **350**. This motion provides an interference between teeth **344**, **354** that deflects portion **340** until further motion toward portion **350** clears tooth **354** and recovery locks tooth **344** behind **354**. This interactive motion of adjacent portions in voided regions is further represented by bold arrows in **FIG. 9G**.

[0160] **FIG. 10** illustrates an additional construction of a medical device **400** adapted to position an implant **402**, or prosthesis, into the coronary sinus or other treatment site. Similar to the embodiments described above, medial device **400** includes a handle assembly **404** at a proximal end, while the implant **402** is located at a distal end. The handle assembly **404** and implant **402** are connected by an elongate, flexible catheter body **406**. Desirably, the body **406** is or includes an extrusion of a material having sufficient column strength, that is, it resists compression in an axial direction, while permitting the body **406** to bend in a radial direction. Any of a variety of polymers well known in the transluminal catheter arts, such as HDPE or PEBAX, is used to form the body **406**. However, other suitable materials may also be used. In one embodiment, the body **406** has an outside diameter of approximately 0.094 inches.

[0161] With reference to **FIG. 11**, a plurality of lumens or passages extend in an axial direction along the length of the catheter body **406**. The illustrated extrusion includes three small lumen **408**, **410**, **412** and one larger lumen **414**. The small lumen **408**, **410**, **412** may be disposed substantially within one half of the circular cross section of the body **406** and each has an inside diameter of approximately 0.024 inches. The larger lumen **414** is desirably positioned substantially within a half of the circular cross section of the body **406** opposite the small lumen **408**, **410**, **412** and may have a diameter of approximately 0.044 inches. Collectively, the lumen **408**, **410** and **412** allow control components (e.g., forming elements **365**, **375**, **385** of **FIGS. 9A and 9B**) of the medical device **400** to extend from the handle assembly **404** to the implant **402** while being protected within the shaft **406**. Alternatively, only a single pull wire lumen or two pull wire lumen may be provided as needed, depending upon the desired number of pull wires. As will be described in detail below, the control components convert operational movements of the handle assembly **404** into desired resultant movement of the implant **402**. The larger lumen **414** may be used to rotatably receive a driver **436** as will be discussed. Additionally, one or more of the lumen may be used to permit irrigation to the coronary sinus, infusion of drugs or contrast media, or other desired purposes.

[0162] With reference to **FIGS. 12 and 13**, the implant **402** is shown in greater detail. **FIG. 13** is an enlarged view of a portion of **FIG. 12** illustrating the releasable connection between the delivery assembly **401** and the implant **402**. As described above, the implant **402** is removably connected to the delivery assembly **401** such that the delivery assembly **401** and implant **402** may be disconnected once the implant **402** has been properly positioned and tensioned within the coronary sinus or other body lumen or hollow organ.

[0163] The implant **402** defines a body portion **416**, which is preferably tubular in shape with at least one central lumen extending therethrough. The overall length of the implant **402** can be varied, depending upon the intended treatment site and desired clinical performance. In one application, in which the device is intended to be positioned within the coronary sinus to reduce the diameter of the mitral valve annulus across a predetermined plane, the implant **402** is

generally within the range of from about 5 cm to about 15 cm in length. For most adult patients, axial lengths within the range of from about 6 cm to about 12 cm may be used. In one embodiment, the implant **402** is approximately 9 centimeters long, and may have a cross-sectional area of no more than approximately 15 mm^2. Preferably, the implant **402** has a cross-sectional area of no more than about 10 mm^2.

[**0164**] The implant may be constructed from a similar material as those embodiments described above, such as any of a variety of stainless steels, Nitinol or other known materials suitable for implantation. An atraumatic distal tip **418** is provided on the distal end of the body portion **416**. A leading end of the tip **418** may be rounded such that the atraumatic tip **418** will not cause significant tissue damage as it is advanced through the vasculature of the patient.

[**0165**] A nut **422** or other structure having a threaded aperture therein is provided at the proximal end of the body portion **416**. Desirably, the nut **422** is axially and rotationally fixed relative to the body portion **416**. For example, in the illustrated embodiment (see **FIG. 13B**) the outer edge of the nut **422** is circular with flat **464** on one side to provide keyway **481** for pullwire **458** and is sized to fit within the body portion **416**. Nut **422** may be welded to body portion **416**. Of course, other suitable arrangements for preventing relative rotation between the nut **422** and body **416** may be used, such as other mechanical interference arrangements, fasteners, solder or adhesives, for example.

[**0166**] The implant **402** additionally includes a screw **428** having a shaft portion **430** and a head portion **432**. The shaft portion **430** includes external threads which mate with internal threads on the nut **422**. Thus, rotation of the screw **428** relative to the body portion **416** results in the screw **428** translating axially with respect the body portion **416**. This relative movement may be utilized to move the body portion **416** of the implant **402** from an implantation configuration to a remodeling configuration through any suitable construction, such as through the use of a pull wire or other forming element as is described above, for example.

[**0167**] The head portion **432** of the screw **428** includes a rotational coupling such as a cavity **434** extending axially from a proximal end of head portion **432**. Desirably, the cavity **434** is shaped to receive a control component of the medical device **400** such as driver **436**. In the illustrated embodiment, the cavity **434** is hex shaped in cross section and sized to receive a hex-shaped distal end portion **438** of the driver **436** (**FIG. 14**).

[**0168**] A male connector **440** contains the head portion **432** of the screw **428**. See **FIG. 13A**. The male connector **440** includes a shaft portion **442** and a head portion **444**. The head portion **444** of the male connector **440** has a larger outside diameter than the shaft portion **442**. A passage **446** desirably extends axially through the male connector **440** and defines a first portion **448** and a second portion **450**. The first portion **448** of the passage **446** is located proximate the head portion **444** of the male connector **440** and has a larger inside diameter than that of the second portion **450**, which is located proximate the shaft portion **442** of the male connector **440**. A transition between the first portion **448** and the second portion **450** defines a shoulder surface **452** which extends generally transverse to the longitudinal axis of the male connector **440**. The first portion **448** of the passage **446** is preferably sized and shaped to receive the head portion **432** of the screw **428**. Desirably, the head portion **432** of the screw **428** abuts the shoulder **452** of the passage **446**.

[**0169**] An annular collar **454** secures the head portion **432** of the screw **428** within the passage **446**. Desirably, the outer diameter of the collar **454** is approximately the same as the outer diameter of the head portion **444** of the male connector **440**. The collar **454** includes an inner flange portion **456** which is sized and shaped to fit within the first portion **448** of the passage **446** of the male connector **440** in a press fit configuration.

[**0170**] In a similar manner to the embodiments described above, the implant **402** desirably includes a wire **458** which is operational for moving the implant **402** from a first, delivery configuration to a second, remodeling configuration. The wire **458** is desirably anchored to a distal end of the implant **402** by welding or any of the methods described above, or any other suitable method as may be determined by one of skill in the art. Desirably, the proximal end of the wire **458** is anchored to the male connector **440** and collar **454** and, preferably, is welded or otherwise bonded to the male connector **440** and collar **454**. However, other suitable methods of attachment may also be used, such as an adhesive or mechanical fastener, for instance. Preferably, the male connector **440**, and collar **454** have slots **460** and **462** to fit the proximal end of pull wire **458** to allow the wire **458** to lay flat and not increase the outside diameter of collar **454** or connector **440**. See **FIG. 13C**. Nut **422** includes flat **464** on one side which is sized and shaped to permit clearance for the wire to pass therethrough. See **FIG. 13B**.

[**0171**] As described above, the delivery assembly **401** is preferably capable of being releasably coupled to the implant **402**. For this purpose, a female connector **466** is desirably coupled, such as by thermal welding, to the connector wire **487** at the distal end of the shaft **406**. The female connector **466** is preferably hollow and substantially cylindrical in shape. The distal end of the female connector **466** includes a plurality of prongs, or finger portions **468**, which are able to flex radially outward to permit the female connector **466** to engage the shaft portion **442** of the male connector **440**. Desirably, the resiliency of the material from which the female connector **466** is constructed enables the female connector **466** to firmly grip the male connector **440**. Desirably, an inner surface of the finger portions **468** defines an annular projection **470** which corresponds with an annular groove **472** (see **FIG. 13A**) of the male connector **440**. When the female connector **466** is engaged with the male connector **440**, the annular projection **470** desirably rests in the annular groove **472** to assist and inhibiting undesired relative axial movement between the delivery assembly **401** and the implant **402**.

[**0172**] The delivery assembly **401** additionally includes a cover **474** that is coupled at the distal end of the shaft **406**. The cover **474** is axially movable from a first position in which the finger portions **468** of the female connector **466** are uncovered to a second position where the cover **474** overlaps at least a substantial portion of the finger portions **468**. In its second position, the cover **474** inhibits undesired flexing of the finger portions **468** to assist in maintaining a connection between the female connector **466** and the male connector **440**.

[**0173**] To prevent rotational movement between the delivery system (including shaft **406** and female connector **466**)

and implant body portion **416**, one of finger portions **468** is removed or omitted from female connector **466** to create space or keyway **483** that fits into key **485** that is thermally welded to shaft portion **442** of male connector **440**.

[**0174**] **FIG. 14** is an enlarged view of the driver **436** apart from the medical device **400**. The driver **436** is desirably an elongate shaft and extends from a proximal end **480** to a distal end **482**. The driver **436** may be constructed from a NiTi material, however, other suitable materials may also be used. The proximal end **480** of the driver **436** is desirably coupled for rotation with respect to the handle assembly **404**, which will be described in greater detail below. The distal end **482** is preferably non circular such as hex-shaped in cross-section and is sized to engage the corresponding hex-shaped cavity **434** of the screw **428**. Thus, rotation of the driver **436** results in corresponding rotation of the screw **428**. Other suitable arrangements to permit rotational coupling of the driver **436** and screw **428** may also be used, such as using complementary polygonal or other non-round cross-sectional shapes for the mating components.

[**0175**] The driver **436** may include a shoulder **484** disposed on a proximal side of the hex-shaped distal end **482**. Preferably, the diameter of the shoulder **484** is larger than a width W (**FIG. 15**) of the hex-shaped distal end **482**. In one preferred embodiment, the diameter of the shoulder **484** is approximately 0.032-0.040 inches and the width W is approximately 0.027 inches. Thus, the shoulder **484** effectively functions as a stop when the hex-shaped distal end **482** of the driver is inserted into the cavity **434** of the screw **428**. As illustrated, the shoulder **484** and the cavity **434** desirably include complementary chamfers **486**, **488** (as shown on **FIG. 13**), respectively, to permit easier entry of the hex-shaped distal end **482** into the cavity **434**.

[**0176**] The illustrated driver **436** may include one or more reduced-diameter portions **490** on a proximal side of the shoulder **484**. The diameter of portion **490** may be smaller than both the width of the shoulder **484** and a diameter of a main portion **492** of the driver **436**, which desirably extends from the proximal end of distal portion **490** to the proximal end **480**. Preferably, the main portion **492** of the driver **436** has a diameter of approximately 0.04 inches. The reduced-diameter portion **490** may have a length of approximately 0.5 inches or more and a diameter of approximately 0.027 inches. However, other suitable dimensions may also be employed. Desirably, each of the transition between the reduced-diameter portion **490** and the main portion **492** of the driver **436** and the transition between the reduced-diameter portion **490** and the shoulder **484** define a chamfer **494**, **495**, respectively to advantageously reduce stress concentrations.

[**0177**] **FIG. 16** is an enlarged cross-section of the handle assembly **404**, which is primarily comprised of a proximal handle **500** and a distal handle **502**. The distal handle **502** is configured to be held stationary during use of the medical device **400** and the proximal handle **500** is configured to be rotatable with respect to the distal handle **502**, thus rotating the driver **436** to selectively move the implant **402** between a delivery position and a remodeling position.

[**0178**] The distal handle **502** is generally cylindrical in shape and defines an internal cavity **504**. A threaded aperture **506** extends from the cavity **504** through the distal end of the distal handle **502** and is substantially concentric with a longitudinal axis of the handle assembly **404**. A proximal connector **508** is desirably retained by a threaded connection with the threaded aperture **506** and extends axially from a distal end of the distal handle **502**. Desirably, the distal handle **502** additionally includes a threaded aperture **510** situated substantially transverse to the longitudinal axis and intersecting the threaded aperture **506**. A set screw is advantageously in threaded connection with the threaded aperture **506** and may be tightened against the proximal connector **508** to inhibit undesired axial movement of the proximal connector **508** with respect to the distal handle **502**.

[**0179**] The proximal connector **508** includes a central aperture **514** passing axially therethrough. The central aperture **514** is desirably substantially concentric with the longitudinal axis of the handle assembly **404** and receives the catheter shaft **406** in a fixed axial position with respect to the distal handle **502**. The shaft **406** may be fixed to the proximal connector **508** in any suitable manner, such as by adhesives or thermal welding, for example.

[**0180**] In the illustrated embodiment, the cavity **504** opens through the proximal end of the distal handle **502** to receive a handle connector **516**, preferably through a threaded connection therebetween. In addition, a set screw arrangement **517**, similar to that described above in relation to the proximal connector **508**, is desirably provided to inhibit undesired movement of the handle connector **516**. The handle connector **516** is configured to connect the proximal handle **500** and the distal handle **502**, while allowing relative rotation therebetween. The handle connector **516** desirably includes a shaft portion **518** extending proximally away from the distal handle **502**. A cylindrical passage **520** extends axially through the proximal handle **500** and is sized to be rotatably mounted on the shaft portion **518** of the handle connector **516**.

[**0181**] Preferably, the proximal handle **500** includes a handle release assembly **522** that permits releasable engagement to the distal handle **502**. The release assembly desirably comprises an annular release collar **524** surrounding the proximal handle **500**. The release collar **524** is sized to allow axial movement with respect to the proximal handle **500**. A plurality of wire retainers **526** (two shown) releasably engage the shaft portion **518** of the handle connector **516** to selectively secure the proximal handle **500** in a fixed axial position with respect to the distal handle **502**. Each of the wire retainers **526** include a short leg **527**, which is circular in cross-section and terminates in a ball end **528**, and a long leg **529**, which is preferably rectangular in cross-section. Desirably, the short leg **527** and the long leg **529** define an angle of approximately 75° between them when the wire retainer **526** is in a relaxed position. Preferably, each wire retainer **526** is constructed from any of a variety of known stainless steel alloys and a total of two, or four, or more wire retainers **526** are employed.

[**0182**] In the illustrated embodiment, the long leg **529** of the retainer **526** is held between an outer surface of the proximal handle **500** and an inner surface of the release collar **524** and, preferably, within a groove **530** defined by the proximal handle **500**. A plurality of apertures **532** extend radially through the proximal handle **500** near its distal end. The outer surface of the proximal handle **500** defines a shoulder **534** between the grooves **530** and the apertures **532**. The shoulder **534** mechanically deflects the wire

retainer **526**, when secured by the release collar **524**, such that the angle between the short leg **527** and long leg **529** is increased from the relaxed position of the wire retainer **526**. The inner surface of the release collar **524** defines an annular groove **536**, which desirably straddles the shoulder **534**, at least when the release collar **524** is in a relaxed position. The short leg **527** of the wire retainer **526** extends through the aperture **532**. The groove **536** preferably engages a bend **538** defined by the transition between the short leg **527** and the long leg **529** of the wire retainer **526** to hold the ball end **528** within an annular groove **540** defined by the shaft portion **518** of the handle connector **516**.

[**0183**] In **FIG. 16**, the release collar **524** is in a first, or engaged position such that the ball end **528** is held within the annular groove **540** to inhibit removal of the proximal handle **500** from the distal handle **502**. The release collar **524** is movable toward the proximal end of the proximal handle **500** into a second, or release position to selectively permit the proximal handle **500** to be removed from the distal handle **502**. When the release collar **524** is moved toward the release position, an edge of the groove **536** engages the wire retainer **526** to deflect the short leg **527** and move the ball end **528** out of the groove **540** of the handle connector **516**, thereby releasing the proximal handle **500** from the distal handle **502**.

[**0184**] A driver holder **525** is positioned within the proximal end of the passage **520** to fix the driver **436** for rotation with the proximal handle **500**. Thus, the driver holder **525** is fixed for rotation with the proximal handle **500**, preferably by having a flat **531** which is engaged by a flat portion **539** of the proximal end of the passage **520** (**FIG. 17**). A set screw arrangement, similar to those described above, may be used to secure the driver holder **525** axially with respect to the proximal handle **500**. A pair of set screws **535**, **537** secure the driver **436** axially and rotationally with respect to the proximal handle **500**. Thus, rotation of the proximal handle **500** results in rotation of the driver **436**. Desirably, an end cap **541** is press fit over the proximal end of the proximal handle **500** to further secure the driver holder **525**. The end cap **541** may include an aperture **540** extending axially therethrough. Desirably, the aperture **540** is substantially aligned with the driver **436**.

[**0185**] With reference to **FIGS. 16 and 18**, the distal handle **502** includes a detach arrangement **542** which allows the delivery assembly **401** to be detached from the implant **402** once it has been properly positioned and moved from its delivery position into its remodeling position. The detach arrangement **542** includes an annular detach collar **544** surrounding the distal handle **502**. The detach collar **544** is desirably concentric with the distal handle **502** and capable of sliding axially thereon. A handle pin **546** is positioned concentrically within the cavity **504** of the distal handle **502**. A fastener, such as a screw **548**, passes through a slot **550** in the distal handle **502** to connect the handle pin **546** to the detach collar **544**. Preferably, external threads of the fastener **548** mate with internal threads of apertures **552**, **554** of the detach collar **544** and handle pin **546**, respectively, to provide a secure connection therebetween.

[**0186**] The handle pin **546** is desirably substantially cylindrical in shape and defines an internal cavity **557** extending from an open proximal end to a closed distal end of the handle pin **546**. The closed distal end of the handle pin **546** includes a pair of apertures **558**, **560** extending axially therethrough, opening into the cavity **557**. The aperture **558** is sized and positioned to permit the driver **436** to pass there through. The aperture **560** is sized to receive a proximal end of a detach wire **562**. The detach wire **562** extends from the handle pin **546** to the cover **474** (**FIG. 13**) through one of the lumen **408**, **410**, **412** of the shaft **406**. The detach wire **562** is secured to the cover **474** by any suitable method, such as thermal welding, adhesives, or mechanical fasteners, for example. A set screw arrangement **564**, similar to those described above, is utilized to secure the detach wire **562** within the aperture **560** for axial movement with the handle pin **546**. Thus, when the detach collar **544** is moved toward the proximal end of the handle assembly **404**, the detach wire **562** pulls the cover **474** to uncover the finger portions **468** of the female connector **466**. When the cover **474** is in this position, the female connector **466** is able to be disconnected from the male connector **440** and, thus, the delivery assembly **401** is able to be disconnected from the implant **402**, as described above.

[**0187**] The handle assembly **404** also desirably includes a detach collar lock arrangement **566** to substantially prevent undesired movement of the detach collar **544**. The lock arrangement **566** preferably includes a threaded aperture **568** passing radially through the distal handle **502**. A lock screw **570** is provided for threaded engagement with the threaded aperture **568**. The lock screw **570** includes a head portion **572**, which interferes with movement of the detach collar **544** toward a proximal end of the handle assembly **404** when the lock screw **570** is screwed substantially fully into the aperture **568**. The lock screw **570** may be backed partially, or fully, out of the aperture **568** to permit desired movement of the detach collar **544** toward the proximal end of the handle assembly **404**.

[**0188**] Operation of the medical device **400** is substantially similar to the embodiments described above. Preferably, before the procedure is initiated, the lock screw **570** is positioned to prevent undesired movement of the detach collar **544**, which could result in premature detachment of the delivery assembly **401** from the implant **402**. Once the implant **402** has been desirably positioned within the coronary sinus by a suitable method, such as described above, the proximal handle **500** is rotated with respect to the distal handle **502** to cause rotation of the driver **436**. Rotation of the driver **436** results in corresponding rotation of the screw **426** which, in turn, causes the implant **402** to move from a delivery configuration to a remodeling configuration, as described in detail above. The direction of rotation of the proximal handle **500** will vary depending on the orientation of the threaded connection between the screw **428** and the nut **422**. However, if a right hand thread orientation is used, the proximal handle **500** will be rotated counter-clockwise to move the implant **402** from a delivery configuration to a remodeling configuration.

[**0189**] When the implant **402** has achieved a desired remodeling configuration, the lock screw **570** is backed off from its locked position to permit movement of the detach collar **544**. The detach collar **544** may then be moved toward the proximal end of the handle assembly **404**, thereby retracting the cover **474** and exposing the finger portions **468** of the female connector **466**. The handle assembly **404** may then be pulled with a sufficient force to cause the finger portions **468** of the female connector **466** to deflect radially

outwardly such that the female connector **466** may be disconnected from the male connector **440**, thus disconnecting the delivery assembly **401** from the implant **402**. The delivery assembly **401** is then removed from the patient, leaving the implant **402** in place.

[**0190**] Although a specific proximal hand piece has been disclosed in detail herein, any of a variety of alternative hand pieces can be readily designed and constructed, as will be apparent of those of skill in the art, to enable practicing the present invention. In general, the proximal hand piece is provided with a tensioning control, for tightening and untightening the implant, and a release actuator for deploying the implant from the deployment catheter. The tensioning control may take any of a variety of forms, such as rotatable knobs or wheels, slidable levers, switches, buttons, knobs or other electrical control for controlling a motor drive on the rotatable driver, or others as will be apparent in view of the disclosure herein. Similarly, the release actuator may take any of a variety of forms, depending upon the construction of the release mechanism. In general, any of a variety of axially movable sliders, switches, levers, or rotatable collars, wheels or knobs may be utilized to control the release actuator. As a safety feature, any of a variety of locks may be provided, to prevent premature release of the implant.

[**0191**] In addition, the proximal control may be provided with any of a variety of auxiliary ports, such as a proximal guide wire port in an over the wire construction, and infusion ports for the infusion of medications, contrast media or other materials depending upon the intended functionality of the device.

[**0192**] **FIGS. 19 and 20** illustrate the slot pattern on an alternative implant **600**, similar to those described above, incorporating a plurality of voids **602** to influence the movement of the implant **600** from a delivery configuration to a remodeling configuration. **FIG. 19** illustrates a plan view of a preferred void **602** arrangement, wherein **57** individual voids **602** are provided. In general, a first side of the implant is generally non-compressible, such as is achieved by the use of a tubular wall. The first side of the implant is radially opposite a second side of the implant, which is provided with the plurality of voids **602**. The voids permit the second side of the implant to be axially expanded or contracted, thereby curving the implant as will be apparent to those of skill in the art. The number and configuration of the voids **602** will influence the bending characteristics of the implant. In general, voids which are transverse to the longitudinal axis of the implant can assist in plane bending of the implant. For most implants intended for positioning within the coronary sinus, and therefore having an axial length of within the range of from about 5 to about 16 cm, at least about 10 and often at least about 20 voids are provided. Thirty or forty or more voids may also be provided, depending upon the desired finished curvature of the implanted device as well as the dimensions of the voids and intervening solid wall material.

[**0193**] **FIG. 20** is an enlarged view of a series of adjacent voids **602**. As in the embodiments described above, a plurality of voids **602** are arranged axially along the implant **600** and are positioned substantially transverse to the longitudinal axis of the implant **600**. Desirably, the voids **602** extend around at least about 180° of the circumference of the implant **600** and, preferably, around at least approximately 300° of the circumference. In some embodiments, the voids **602** extend around between approximately 300° and 315° of the circumference of the implant **600**. Alternatively, the tubular body of the implant may comprise a spring coil in which adjacent windings are slightly spaced apart. Axial column strength on the first side of the implant is provided by an axially extending support such as a flexible ribbon or core wire which may be soldered or otherwise attached to the spring coil to inhibit axial compression along the side which carries the support. The opposing side of the coil may be compressed or expanded, to impart a curve. The coil may be provided with an outer polymeric sleeve.

[**0194**] Desirably, both ends of each void **602** terminate in a curved void portion such as circular void end portion **603**. Advantageously, the end portions **603** of the void **602** reduce stress concentrations at the ends of the voids **602** that result from bending of the implant **600** from a delivery configuration to a remodeling configuration. In one implementation, the end portions **603** have a diameter of approximately 0.018 inches and a circumferential distance between the centers of the two opposing circular portions **603** of a single void **602** is approximately 0.068 inches. This feature decreases the likelihood of cracks originating in the material of the implant **600** at the ends of the voids **602**.

[**0195**] Each void **602** is defined as a space between two opposing edge surfaces **604**, **606** of the body of the implant **600**. Surface **604** includes an axially extending projection such as substantially "U-shaped" projection **608** positioned within a complementary, substantially "U-shaped" recess **610** of surface **606**. Alternative complementary configurations such as a chevron may also be used. An axis A_V of both the projection **608** and the complementary recess **610** is substantially parallel to the longitudinal axis of the implant **402**.

[**0196**] An axial distance between the substantially transverse edges **604**, **606** defines a width W_V of the void **602**. The W_V of the void **602** may be varied, depending upon the desired performance. In general, widths within the range of from about 0.010 to about 0.040 inches are often used. In the illustrated embodiment, the width W_V is approximately 0.012 inches. Desirably, a distance between at least a portion of both sides of the projection **608** and recess **610** is less than the void width W_V and defines a pair of interference portions **612** between the surface **604** and the surface **606**.

[**0197**] The interference portions **612** inhibit the implant **600** from moving out of a plane defined by the longitudinal axis of the implant **600** as it moves from a delivery configuration to a remodeling configuration. Advantageously, the surfaces **604**, **606** contact one another in the interference portions **612** of the void **602** in response to a force urging the implant **600** to curve out of plane. Thus, with the illustrated arrangement, the implant **600** is maintained within the desired plane while moving from a delivery configuration to a remodeling configuration. Alternatively, the void **602** may be configured to permit a predetermined out of plane movement of the implant **600** if such is desirable, as will be appreciated by one of skill in the art. For example, only one interference portion **612** may be provided to impart a controlled rotational bend, or the distance between the surfaces **604**, **606** may be increased or decreased in the interference portion **612**.

[0198] Any of a variety of alternative implant body structures may be utilized, as will be apparent to those of skill in the art in view of the disclosure herein. In general, the body is transformable from a flexible, implantation orientation to a curved, implanted orientation. The specific void pattern or other structure for facilitating curvature may be varied, depending upon the desired manufacturing techniques and clinical performance. In addition, any of a variety of alignment structures may be utilized, to influence the shape of the implant in the implanted orientation. Although slot patterns have been described above which facilitate in plane bending of the implant, the same structures may be repositioned along the length of the implant in a manner that produces compound curvatures or other out-of-plane bending as the implant is changed to the implanted orientation.

[0199] Referring to **FIGS. 21 and 22**, there is illustrated an implant **100** in accordance with another aspect of the present invention. The implant **100** is adapted for positioning within or adjacent the coronary sinus, and for maintaining a compressive force on an aspect of the mitral valve annulus. The implant **100** comprises an elongate flexible body **102** having a proximal end **104** and a distal end **106**. The body **102** may be constructed in any of a variety of manners, utilizing structures, materials and dimensions previously disclosed herein. In general, the body **102** is flexible such that it may be transluminally navigated to a deployment site such as within the coronary sinus. Alternatively, the implant may be advanced through tissue to a position outside of the coronary sinus such as within the wall of the heart or adjacent an exterior surface of the heart. The body **102** may thereafter be manipulated such that it imparts a compressive force on at least a portion of the mitral valve annulus, and the body **102** may be locked or restrained in the second configuration.

[0200] As illustrated in **FIG. 22**, the body **102** may be considered to comprise a proximal segment **108**, a central segment **110** and a distal segment **112**. In the implanted orientation, as illustrated, the proximal segment **108** and the distal segment **112** are concave in a first direction, and the central segment **110** is concave in a second direction. This configuration additionally comprises at least a first transition **114** between the proximal segment **108** and central segment **110**, and a second transition **116** in between the central segment **110** and the distal segment **112**.

[0201] In the illustrated embodiment, the curvature of the proximal segment, central segment and distal segment reside in a single plane. However, the central segment **110** may reside in a plane which is rotationally offset from the plane which contains the proximal segment **108** and distal segment **112**, depending upon the desired clinical performance and deployment site.

[0202] The implant **100** preferably additionally comprises one or more anchors, for retaining the body **102** at a deployment site. In the illustrated embodiment, at least one and, in some embodiments two or four or more proximal anchors **118** are carried by the proximal segment **108**. In addition, at least one, and, in certain embodiments at least two or four or more distal anchors **120** are carried by the distal segment **112**. In the illustrated embodiment, first and second proximal anchors **118** and first and second distal anchors **120** are provided.

[0203] The proximal anchors **118** and distal anchors **120** are provided on a first side of the body **102**, which is the same side as the convex side of the central segment **110** when in the implanted orientation. In this orientation, the first side of the implant **100** is configured to reside against the wall of the inside radius of curvature of the coronary sinus. The proximal anchor **118** and distal anchor **120** engage the vessel wall on the mitral valve side of the coronary sinus, allowing advancement of the central segment **110** from the first side laterally to apply a compressive force to at least a portion of the mitral valve annulus.

[0204] Any of a variety of engagement structures such as proximal anchor **118** and distal anchor **120** may be utilized to retain the implant **100** against the wall of the coronary sinus. Alternatively, the implant **100** may be configured to "push off" of the opposing wall of the coronary sinus, to support advancement of central segment **110** in the direction of the mitral valve. For example, the proximal segment **108** and distal segment **112** may be configured to extend all the way across the diameter of the coronary sinus, to contact the opposing wall. This may be accomplished by remodeling the device such that the amplitude equals or exceeds the diameter of the coronary sinus. Alternatively, the proximal and distal anchors **118**, **120** may take the form of a tubular structure such as a self-expanding stent, or a stent which is expanded by a dilatation balloon or other expansion structure. The tubular anchor will then restrain the implant **100** in a desired orientation within the coronary sinus. As a further alternative, the proximal and distal ends of the implant may be extended through the wall of the coronary sinus, or stitched to or otherwise adhered to the wall of the coronary sinus, to permit the remodeling described herein. Additional alternative anchor configurations will be disclosed below.

[0205] Any of a variety of self expanding or mechanically expandable structures may be provided on the tubular body **102**, to assist in anchoring and positioning the implant. For example, referring to **FIG. 23**, the proximal end **104** of the tubular body **102** is provided with a radially expandable support **140**. In general, support **140** comprises a plurality of axially extending ribs or elements **142**, each of which may be additionally provided with one or more barbs **144**. Additional structural details of suitable support structures may be found by reference to U.S. patent application Ser. No. 10/033,371 filed on Oct. 19, 2001 and entitled "Adjustable Left Atrial Appendage Occlusion Device," published on Aug. 15, 2002 as Publication No. US 2002/0111647A1, the disclosure of which is incorporated in its entirety herein by reference.

[0206] Referring to **FIGS. 21 and 22**, the implant **100** comprises an elongate forming element **122** which has been described in various forms previously. The forming element **122** extends between a distal point of attachment **124** to the body **102** and a proximal point of attachment **126** to a threaded collar or other axially moveable structure. Proximal movement of the proximal point of attachment **126** with respect to the body **102** induces a curvature in the implant **100** as has been discussed.

[0207] In the illustrated configuration, the forming element **122** is attached at the proximal point of attachment to a threaded structure such as a nut **128**. Alternatively, threads may be provided directly on a proximal portion of the forming element. Nut **128** is axially movably carried by a rotatable screw **130**, using well understood complementary threaded engagement surfaces. Rotation of the screw **130**

will cause relative axial movement of the nut **128** as will be understood by those of skill in the art.

[**0208**] The screw **130** is provided with one or more axial retention structures to permit rotation but inhibit axial movement thereof. In the illustrated embodiment, the screw **130** is provided with one or more radially outwardly extending projections such as flange **132**, which is captured between a first bushing **134** and a second bushing **136** to prevent axial movement. Screw **130** may be retained against axial motion while permitting rotation using any of a variety of alternative structures, such as radially inwardly extending tabs or flanges from the inside surface of the body **102**, which are slideably received by one or more radially inwardly extending annular grooves in the screw **130**.

[**0209**] The proximal end of the screw **130** is provided with a rotational coupling **138**. Coupling **138** is adapted to removably receive a rotatable driver carried by the deployment catheter such that rotation of the driver within the deployment catheter will produce axial movement of the nut **128**. In one implementation, the coupling **138** comprises a recess having a non-round cross-sectional configuration, such as a hexagonal wall. This cooperates with the hexagonal distal end on the driver (disclosed previously herein) to produce a removable rotational coupling.

[**0210**] In the embodiment illustrated by **FIG. 22**, the forming element **122** extends through the inside of the body **102** in each of the proximal segment **108** and distal segment **112**, and extends along the outside of the body **102** along the central segment **110**. See also **FIG. 21**. This configuration, in which the forming element **122** extends through a first aperture **140** in or near the proximal transition **114**, and a second aperture **142** in or near the distal transition **116**, has been found to be convenient in an implant adapted to assume a "w" implanted configuration as shown in **FIG. 21**. Alternatively, the forming element **122** may extend along the inside of the body **102** throughout its length. The forming element **122** may extend along the outside of the body **102** throughout its length, or extend partially inside and partially outside of the body **102** depending upon the desired performance characteristics of the implant.

[**0211**] In connection with any of the preceding embodiments, it may be desirable for the implant to change in axial length as it is advanced from the first, flexible configuration for transluminal delivery, to the second configuration for remodeling the mitral valve annulus. This may be accomplished in a variety of ways, such as configuring two or more sections of the tubular body in a telescoping fashion, such that a first portion of the body is axially moveably positioned within a second portion of the body. This enables the axial length of the body to be controllably altered, during or apart from the transformation of the device to its implanted configuration. In certain applications, it may be desirable for the axial length of the implant to shorten as the implant is converted to its implanted orientation. Foreshortening of the implant by a distance within the range of from about 10% to about 95% of the maximum implant axial length is presently contemplated.

[**0212**] In one embodiment, controlled foreshortening may be accomplished by providing a plurality of foreshortening slots or chevrons in the outer wall of the tubular body. Referring to **FIG. 24**, there is illustrated a fragmentary view of a portion of an elongate body **320**. The configuration of **FIG. 24** can be applied to any of the previously disclosed embodiments, as will be apparent to those of skill in the art in view of the disclosure herein.

[**0213**] The elongate body **320** includes a plurality of transverse voids **330** as has been discussed. Axial compression of the elongate body **320** causes the voids **330** to axially close, thereby deflecting the elongate body **320** out of plane. In some of the previously disclosed devices, the voids **330** are aligned on a first side of the elongate body **320**, and they oppose a second side of the elongate body **320** which is comparatively non collapsible and thereby acts as a spine for the device.

[**0214**] In accordance with the present, foreshortening feature, a first plurality of foreshortening voids **331** is provided on the elongate body **320**. The foreshortening voids **331** are positioned on the elongate body **320** such that they permit axial compression of the body, upon application of the axially compressive force utilized to deflect the body out of plane. In the illustrated embodiment, the first plurality of foreshortening void **331** is axially aligned along the "backbone" or support side of the device, opposite to the voids **330**.

[**0215**] A second plurality of foreshortening voids **333** may also be provided, spaced circumferentially apart from the first plurality of foreshortening voids **331**. In the illustrated embodiment, the first and second foreshortening voids **331** and **333** are aligned along first and second longitudinal axes, which are spaced approximately 180° apart from each other around the circumference of the elongate body **320**.

[**0216**] In general, foreshortening within the range of from about 1% to about 20% of the maximum length of the device is presently contemplated. The specific number and dimensions of the foreshortening voids may be optimized by those of skill in the art in view of the disclosure herein, taking into account the desired clinical performance.

[**0217**] Referring to **FIG. 25**, there is illustrated an alternate construction of the implant **100** in accordance with the present invention, for accomplishing the radial inward compression previously discussed in connection with **FIG. 22**. The implant **100** extends between a proximal end **104** and a distal end **106**. The implant may be considered to be divided into two or more distinct zones, such as a central segment **110** and proximal and distal segments **108** and **112**. At least one segment on the implant **100** includes a compression element **140**, configured to generate radial compression such as against the posterior leaflet of the mitral valve. In the illustrated design, the compression element **140** comprises a flexible ribbon **142**. The flexible ribbon **142** is configured to project radially inwardly from the concave side of the implanted device **100**, as the device **100** is transformed from its implantation configuration to its implanted configuration. In one embodiment, the ribbon **142** comprises a flat wire having a cross section of about 0.005 inches by about 0.020 inches, and having an axial length of from about 3 to about 4 cm.

[**0218**] Ribbon **142** may be configured to provide a radially outwardly directed compressive force using any of a variety of mechanisms. In one implementation, the ribbon **142** has a fixed length and is attached at first and second points spaced apart along the length of the implant **100**. As the concave side of the implant **100** axially shortens, the fixed

axial length of the ribbon **142** causes a preset bend to progress laterally outwardly in response to the bending of the implant. Alternatively, the compression element **140** may be activated in response to an active control, such as rotation of a threaded screw or movement of an axially moveable control.

[**0219**] In addition to a central compression element **140**, additional compression elements may be provided. In the embodiment illustrated in **FIG. 25**, a proximal compression element **139** and a distal compression element **143** are also provided. The desirability of two or three or more compression elements **140** spaced axially apart along the implant depends upon the desired clinical performance of the device.

[**0220**] In addition to the compression element **140**, the implant **100** illustrated in **FIG. 25** additionally carries one or two or more proximal tissue anchors **118** and distal tissue anchors **120**. Preferably, the proximal anchors **118** and the distal anchors **120** are positioned fully within the tubular body of the implant **100** during transluminal navigation. The proximal anchors **118** and distal anchors **120** are extended radially outwardly from the implant **100** in an inclined orientation to engage tissue at the time of deployment, such as simultaneously with the transformation of the implant **100** from the implantation orientation to the implanted orientation. Additional details of particular anchor configurations and deployment sequences will be discussed below.

[**0221**] Referring to **FIG. 26**, there is illustrated an alternate construction for the compression element **140**. In this construction, the compression element **140** comprises a basket or other structure which extends radially outwardly in response to axially compressive movement. The basket **144** comprises a plurality of axially extending ribs **146** connected to the implant at a proximal hub **148** and distal hub **150**. During tightening of the implant to compress the mitral valve annulus, the distal hub **150** and the proximal hub **148** are advanced towards each other, thereby axially shortening and radially expanding the wire basket **144**. The basket may comprises two or three or more, and, preferably, at least about 6 axial ribbons **146**. In one embodiment, the basket **144** is formed by providing a plurality of axially extending slots around the circumference of a metal tube. Any of a variety of medically compatible metals may be used, such as stainless steel, or nickel titanium alloys such as nitinol. The radially expandable support structure illustrated in **FIG. 23** may also be positioned on the implant in a central segment, to function as a compression element **140**.

[**0222**] Referring to **FIGS. 27 and 28**, there is illustrated a further variation of the present invention. In this construction, the implant **100** comprises a proximal section **152** and a distal section **154**. The bending mechanism has been relocated to the center of the device, and is illustrated as including a rotatable screw **156**. The screw is rotated in response to rotation of a component **157** on a deployment device which is removably connectable to the rotatable screw. The component **157** on the deployment device is coupled to a rotatable driver positioned within the implant **100** and further rotatably coupled to the screw **156**. Thus, a rotational force on the component **157** is translated to the rotatable driver **159** within the deployment device which causes the rotatable screw **156** to advance the proximal section **152** and the distal section **154** into the implanted configuration, as illustrated in **FIG. 27**. As the implant **100** is advanced toward the implanted configuration, one or more proximal anchors **118** and one or more distal anchors **120** are also deployed from the device **100**, to engage tissue as has been discussed elsewhere herein.

[**0223**] An alternate tensioning assembly which may be used in a device like that illustrated in **FIG. 27** is shown in an enlarged fragmentary view in **FIG. 28**. In general, the device **110** includes a rotatable screw **156**. The rotatable screw **156** includes a proximal coupling **158**, having a recess **160** or other releasable connector as has been discussed elsewhere herein. In one convenient construction, the recess **160** is provided with a polygonal cross section, such as to accommodate a hex coupling on the distal end of the deployment device (not shown). Any of a variety of complementary surface structures between the proximal coupling **158** and the deployment device may be utilized as has been discussed.

[**0224**] The proximal coupling **158** is connected to the threaded shaft **162**. Threaded shaft **162** extends through an aperture **166** in a proximal block **168**. Block **168** is attached to a proximal pull wire **170**.

[**0225**] The threaded shaft **162** is threadably engaged within a threaded aperture **172** in a nut **174**. The nut **174** is connected to a distal pull wire **176**, which extends through the distal section of the implant **100**. The proximal pull wire **170** extends proximally though the device to a point of attachment with respect to the tubular body, and the distal pull wire **176** extends distally to a point of attachment with respect to the tubular body.

[**0226**] As will be appreciated in view of the previous disclosure herein, rotation of the proximal coupling **158** will cause the threaded shaft **162** to rotate freely with respect to the aperture **166** in the proximal block **168**, and to axially advance the nut **174** within the implant **110**. Preferably, the aperture **166** in the proximal block **168** and the inner threads of the nut **174** are oppositely threaded with respect to one another such that the effect of rotation of the proximal coupling **158** in a first direction is to decrease the distance between the proximal block **168** and the nut **174**. Of course, the threaded shaft **162** is appropriately configured with cooperating threads as will be apparent to one of ordinary skill in the art. This will have the effect of bending both the proximal section **152** and distal section **154** into the curved orientation illustrated in **FIG. 27**. In the illustrated construction, axial advancement of the proximal block **168** and the nut **174** towards each other will also deploy the proximal tissue anchors **118** and distal anchors **120**. Preferably, the length of the threaded shaft **162** is configured such that a previously selected maximum number of rotations in a first direction cause the proximal block **168** and nut **174** to contact each other and interfere with further rotation of the screw **156**. Thus, the maximum displacement of the proximal pull wire **170** and distal pull wire **176** can be selectively controlled thereby limiting the deflection of the proximal section **152** and the distal section **154** to a final desired shape.

[**0227**] Rotation of the proximal coupling **158** in a second, opposite direction will allow the implant to straighten out and become flexible again, such as to permit repositioning, retensioning, or removal. The rotational limit of the screw **156** in a second direction can be controlled by the interference of the proximal block **168** against the proximal cou-

pling **158**. As the screw **156** is rotated in a second direction and reaches its maximum rotation, the proximal block **168** contacts the proximal coupling and thereby inhibits any further screw rotation in the second direction.

[**0228**] The operation of the tissue anchors may be accomplished in any of a variety of ways, as will be apparent to those of skill in the art in view of the disclosure herein. One construction may be understood by reference to **FIG. 29**. In this construction, the distal anchors **120** are automatically deployed in response to proximal retraction of the distal pull wire **176**.

[**0229**] Referring the **FIG. 29**, the distal pull wire **176** is provided with at least a first tissue barb **180** and optimally a second tissue barb **182**. Additional barbs may be provided as desired. Tissue barbs **180** and **182** are inclined laterally in the proximal direction, and are aligned with openings **184** and **186**, respectively, in the side wall of the implant **100**. Proximal retraction of the distal pull wire **176** causes the tissue barbs **180** and **182** to advance laterally through the openings **184** and **186**, at an angle which is inclined in the proximal direction, to engage tissue. Each of the tissue barbs **180** and **182** may be provided with a sharpened distal end, to facilitate penetrating tissue.

[**0230**] The distal pull wire **176** may extend proximally to the nut **174** as discussed in connection with **FIG. 28**. Alternatively, the distal pull wire **176** may extend all the way to the proximal end of the implant **110**, depending upon the design of the tightening mechanism.

[**0231**] In the embodiment illustrated in **FIG. 29**, the distal pull wire **176** exits the tubular body at an aperture **188**, and extends along the outside surface of the implant **100** on the concave side of the device when in the implanted orientation. Alternatively, the distal pull wire **176** may extend within the implant **100** throughout the length of the distal pull wire **176**. The proximal anchor **118** may be constructed in a similar manner, as will be apparent to those of skill in the art.

[**0232**] When fully deployed, each of the tissue barbs **180** and **182** extend outwardly from the side of the implant for a distance within the range of from about 1 mm to about 5 mm. By adjusting the angle between the longitudinal axis of the barb **180** and the longitudinal axis of the implant, the length of the barb **180** can be adjusted while maintaining the lateral distance that the barb **180** may travel within the desired range.

[**0233**] In certain applications of the invention, it may be desirable to control the sequence by which the distal anchors and/or proximal anchors deploy, relative to the transformation of the implant from the implantation orientation to the implanted orientation. For example, it may be desirable for the distal anchors **120** to deploy into the wall of the coronary sinus prior to the implant placing any substantial compressive pressure on the mitral valve annulus. Following compression of the annulus, the proximal anchors may desirably be deployed. Alternatively, it may be desirable to deploy both the proximal and distal anchors at the beginning of the compression cycle, to be followed by the application of pressure by the implant on the mitral valve annulus. Additionally, the proximal and/or distal anchors can be deployed before compression of the annulus. This sequence can be controlled in any of a variety of ways, such as by providing a mismatch between the angle of the barbs **180** and **182** within the implant, and the apertures **184** and **186** through which the barbs will travel. Providing friction to the deployment of the barbs will tend to delay deployment of the barbs until a sufficient tension force has been applied to the distal pull wire **176**. Alternatively, by configuring the pull wire **176** and barbs **180** and **182** for minimal deployment friction, the barbs will tend to deploy prior to the application of significant compressive force on the mitral valve annulus. The sequence may be optimized by those of skill in the art in view of the desired clinical performance.

[**0234**] Although the foregoing embodiments have been described primarily in terms of a structure having a tubular housing with various components therein, the invention may be accomplished using a nontubular structure such as a pair of adjacent axial elements. In general, the lateral bending and compression functions of the invention can be accomplished as long as a first elongate flexible structure provides column strength, and a second forming element is attached near a distal end of the column strength element. Proximal axial retraction of the forming element will cause a lateral deflection of the column strength element, provided proximal movement of the column strength element is inhibited. Similarly, axial distal advancement of the forming element, if it is selected such that it has a sufficient column strength, will cause a lateral deflection of the column strength element in an opposite direction. The column strength element may be in the form of a ribbon, wire, bottomed out spring, or other element which will resist collapse under tension. In the foregoing embodiments, one side wall of the tubular body provides column strength, and the forming element operates as a pull wire such that proximal retraction of the pull wire causes a lateral deflection of the column strength element.

[**0235**] A further implementation of the invention may be understood by reference to **FIGS. 30A and 30B**. In this construction, a distal section **154** has one or more tissue anchors **120**, and a proximal section **152** has one or more proximal tissue anchors **118**. The distal tissue anchor **120** and/or the proximal tissue anchors **118** may either be passive (as illustrated) or active, such that the anchors are pivotably or angularly adjustably carried by the implant. Active tissue anchors may either incline in response to positioning or tightening of the device, or be controlled by a separate rotatable or axially moveable control element. The proximal tissue anchors **118** and distal tissue anchors **120** need not both be active or passive. For example, the distal tissue anchor may be actively engageable with the adjacent tissue such as by manipulation of a tissue engagement control. The proximal tissue anchor may be passively engageable with the adjacent tissue. The reverse may also be accomplished, where the distal tissue anchor is passively engageable with adjacent tissue and the proximal tissue anchor is controllably engageable utilizing a control on the deployment catheter. The foregoing discussion concerning the active or passive tissue anchors applies to all of the embodiments herein, as will be apparent to those of skill in the art in view of the disclosure herein.

[**0236**] A tensioning element **190** is provided at about a junction between the distal segment **154** and the proximal segment **152**. The tensioning element **190** is adapted to apply tension between the proximal anchors **118** and the distal anchors **120**.

[0237] In one construction, at least one of the proximal section **152** and distal section **154** comprises a plurality of transverse engagement structures such as slots. See **FIG. 30B**. The tensioning element **190** includes a rotatable threaded shaft (not shown), oriented such that the threads engage the transverse slots on the proximal or distal section. Rotation of the threaded shaft using any of a variety of rotatable engagement configurations disclosed elsewhere herein will cause axial movement of the corresponding proximal or distal section **152**, **154**, as will be understood by those of skill in the art.

[0238] In one particular embodiment, the proximal section **152** is secured to the tensioning element **190**. The distal section **154** is axially moveably engaged with the tensioning structure **190** by engagement of one or more rotatable threads within the tensioning structure **190**, in a plurality of transverse slots on the distal section **154**. Rotation of a rotatable driver in a first direction will draw the distal anchor **120** in a proximal direction, thereby decreasing the distance between the proximal anchor **118** and the distal anchor **120**. Alternatively, the distal section **154** may be fixed with respect to the tensioning element **190**, and the proximal section **152** may be axially advanced or retracted based upon the rotation of a rotatable driver. In a further alternative, each of the proximal section **152** and the distal section **154** may engage a threaded shaft in the tensioning element **190**, to enable the axial distance between the proximal anchor **118** and the distal anchor **120** to be adjusted.

[0239] Each of the proximal anchors **118** and distal anchors **120** may be either actively deployed such as has been described previously herein, or may be fixed with respect to their corresponding section **152**, **154**. In an embodiment in which the anchor is fixed with respect to its corresponding support section, the anchors are retracted within a deployment sleeve for transluminal navigation. The deployment sleeve is advanced distally through the coronary sinus to the distal point of attachment of distal anchor **120**. Proximal retraction of the outer sleeve with respect to the implant will release the distal anchor **120**, which may incline radially outwardly in the proximal direction due to its own internal bias. Proximal traction on the distal anchor **120** will cause the distal anchor to engage tissue at the distal attachment site. The outer tubular sleeve may be further proximally retracted to release the proximal anchor **118**. Rotation of the rotatable driver following engagement of the anchors will apply compressive force to the mitral valve annulus. Any of a variety of lateral engagement structures, such as have been previously disclosed herein, may be adapted for use with the present embodiment, to focus pressure on a specific anatomical site such as the posterior leaflet of the mitral valve. See, for example, the compression element **140** illustrated in **FIG. 25**, and corresponding text.

[0240] For example, a compression element **140** may be formed from an elongate flexible ribbon extending along the concave side of at least one of the distal section **154** and proximal section **152**. A proximal end of the compression element **140** may be secured with respect to the proximal section **152**, and a distal end of the compression element **140** may be secured with respect to the distal section **154**. Upon manipulation of the tensioning element **190** to reduce the axial length of the implant, the compression element **140** will extend radially inwardly from the concave side of the device.

[0241] In the foregoing embodiment, deployment of the compression element is responsive to shortening or tensioning of the device. In an alternate implementation of the invention, the lateral advance of the compression element **140** may be controlled independently of tensioning the tensioning element **190**. In this embodiment, the tensioning element **190** may be adjusted to seat the proximal anchors **118** and distal anchors **120**, and to apply a degree of tension on the mitral valve annulus. During or following the tensioning step, the compression element **140** may be laterally deployed. Lateral deployment may be accomplished by rotating a rotatable driver or axially moving an axial driver within the deployment catheter, inflating a laterally expandable balloon by way of an inflation lumen in the deployment catheter, or through any of a variety of structures which will become apparent to those of skill in the art in view of the disclosure herein.

[0242] There is provided in FIGS. **31**A-C a partially cross-sectioned side elevational view of an alternate construction of an implant **900**, similar to that illustrated in **FIG. 30A**. The implant **900** includes a proximal section **152**, a distal section **154**, and a tensioning element **190**. The tensioning element **190** couples the proximal section **152** to the distal section **154**, and is used to apply and release tension therebetween.

[0243] As illustrated in **FIG. 31A**, the proximal section **152** includes a proximal tissue anchor **118**, and a proximal ribbon **902**. The proximal tissue anchor **118** may be laser cut from stainless steel tube, and has an arcuate cross-sectional shape (not shown). Alternatively, any of a variety of tissue anchor designs and materials may be employed, as have been described in greater detail above, and as are known to those of skill in the art. In one embodiment, the proximal tissue anchor **118** includes a penetrating point **904**, and two barbs **906** to hold the proximal tissue anchor **118** securely in place once deployed. A variety of penetrating points **904** and barbs **906** may be used to achieve desired clinical results, and the particular proximal tissue anchor **118** design may vary depending upon the particular clinical requirements.

[0244] The proximal tissue anchor **118** preferably includes two holes **908** that are used to partially rotatably couple the proximal tissue anchor **118** with a pivot **910** that is coupled to the proximal ribbon **902**. One embodiment of such pivot **910** is shown in greater detail on **FIG. 31C**. The pivot **910** may be integral to the material of the proximal ribbon **902**, or may include a pin, or other device coupled to the proximal ribbon **902**. The proximal section **152** also includes a spring **912**, used to bias the proximal tissue anchor **118** so that its penetrating point **904** rotates away from the proximal ribbon **902** and towards tissue when deployed. In one embodiment, the spring **912** is cut from the same tubing used to form the proximal tissue anchor **118**, and is integral thereto. In another embodiment, the spring **912** has a torsional design, as is well known to those of skill in the art.

[0245] The overall length of the proximal tissue anchor **118** preferably is about 6 mm, although the actual length will be selected based upon the particular requirements of the clinical setting. In one embodiment, the length of the proximal tissue anchor **118** will be selected such that it does not penetrate all the way through the wall of the coronary sinus when deployed. In general, the length of the proximal tissue anchor **118** is in the range between about 1 mm and about 15 mm.

[0246] Distal section **154** preferably includes a distal tissue anchor **120**, a distal ribbon **914**, and a spring **912**, as shown in **FIG. 31A**. Distal tissue anchor **120** is similar to proximal tissue anchor **118**, and has similar characteristics and dimensions as described in greater detail above. Distal ribbon **914** preferably includes multiple slots **916** to interface with the tensioning element **190**, as described in greater detail below. The slot **916** pitch, or center-to-center spacing of the slots **916**, partially defines the resolution of the adjustability of the tension applicable between the proximal and distal tissue anchors **118**, **120**. In one embodiment, the slot pitch is about 1 mm. Alternatively, the slot pitch is between 0.1 mm and 3 mm. In another embodiment, the slot pitch is not constant along the length of the distal ribbon **914**. The distal ribbon **914** may be designed to have a greater pitch, or slot width towards the proximal end of the distal ribbon **914**, and a smaller pitch or slot width towards the distal end of the distal ribbon **914**. Alternatively, the distal ribbon **914** may have no slots such that continuous instead of stepped movement of the distal ribbon **914** is used to apply tension between the proximal and distal tissue anchors **118**, **120**. The method of applying tension between the proximal and distal tissue anchors **118**, **120** is described in greater detail below. The distal ribbon **914** also preferably includes a pull-wire disconnect **918** for removable coupling to a tab pull-wire **944**, as described in greater detail below with reference to FIGS. **31**E-F.

[0247] As shown in **FIGS. 31A and 31B**, the implant **900** also includes a tensioning element **190**. In one embodiment, the tensioning element **190** includes a housing **920**, latch **922**, spacer **924**, and insert **926**. In one embodiment, the housing **920** is made from a section of stainless steel tubing, although housings **920** of other shapes and materials may be used. In one embodiment, the housing **920** is made from nickel titanium tubing. The proximal ribbon **902** preferably is attached to the inside lumen of the housing **920** using any of a variety of methods, including welding, bonding, or by using any of a variety of fasteners, as is well known to those of skill in the art. In one embodiment, the proximal ribbon **902** is attached to the housing **920** such that the axial position of the proximal tissue anchor **118** is fixed with respect to the housing **920**.

[0248] The housing **920** also includes a latch **922** that preferably is attached to a spacer **924** at the latch's **922** distal end. The latch **922** includes a tang **928** that bends towards the distal ribbon **914** at an angle relative to the distal ribbon **914**. The tang **928** is designed to travel through an opening **930** in the spacer **924**, and engage a slot **916** in the distal ribbon **914**. By engaging the slot **916** in the distal ribbon **914**, the latch **922** prevents axial movement of the distal ribbon **914**, and distal tissue anchor **120**, in the distal direction. The opening **930** in the spacer **924** is of sufficient dimension to allow the tang **928** of the latch **922** to flex enough to disengage the slot **916** in the distal ribbon **914** when the distal ribbon **914** is moved in the proximal direction. The interface between the latch **922** of the tensioning element **190** and the slot **916** of the distal ribbon **914** functions as a ratcheting mechanism. The ratcheting mechanism allows stepped movement of the distal ribbon **914** as it is moved in the proximal direction (as described in greater detail below), yet prevents the distal ribbon **914** from moving in the distal direction. The amount of movement of each ratcheting step is related to the pitch between the distal ribbon **914** slots **916**, as described above.

[0249] In another embodiment, as mentioned above, the distal ribbon **914** does not contain slots. In such embodiment, friction between the tang **928** of the latch **922** and the distal ribbon **914** is sufficient to allow continuous, e.g., non-stepped, or infinitely adjustable, movement of the distal ribbon **914** in the proximal direction, yet prevent movement of the distal ribbon **914** in the distal direction. In another embodiment, shallow depressions, ribs or other texture, or partial thickness slots are added to the surface of distal ribbon **914** to provide enhanced friction against tang **928**. In one embodiment, movement of the distal ribbon **914** in the proximal direction may be achieved by releasing, or disengaging the tang **928** of the latch **922** from the distal ribbon **914**.

[0250] In one embodiment, the housing **920** also includes a latch release ribbon **932** that preferably is disposed between the spacer **924** and the distal ribbon **914**, as illustrated in **FIG. 31A**. The latch release ribbon **932** is also axially moveable with respect to the housing **920** and the distal ribbon **914**. In one embodiment, as the latch release ribbon **932** is moved proximally, the tang **928** of the latch **922** is lifted such that it disengages the slot **916** of the distal ribbon **914**. While disengaged from the latch **922**, the distal ribbon **914** may be moved in the distal direction, thereby increasing the distance between the proximal and distal anchors **118**, **120**.

[0251] In one embodiment, portions of the lumen of the housing **920** may be filled with an insert **926**, as illustrated in **FIG. 31B**. As shown, insert **926** fills the spaces between the spacer **924** and the housing **920** of the tensioning element **190**. In one embodiment, the portion of the lumen between the distal ribbon **914** and the housing **920** does not contain an insert **926**, although in other embodiments it does. In one embodiment, it is advantageous to omit an insert **926** between the distal ribbon **914** and the housing **920** so as to reduce friction on the distal ribbon **914** when moving the distal ribbon **914** with respect to the housing **920**.

[0252] **FIG. 31C** illustrates one embodiment of the distal ribbon **914**, as described in greater detail above. The illustrated distal ribbon **914** is about 9 cm long, although the length of the distal ribbon **914** may be selected for the clinical requirements of the particular treatment. In general, the length of the distal ribbon **914** is in the range between about 2 cm and about 20 cm. The length of the proximal ribbon **902** has similar dimensions, such that the overall length of the implant **900** is in the range between about 2 cm and about 20 cm, preferably in the range between about 5 cm and about 15 cm, and more preferably in the range between about 7 cm and about 10 cm. In one embodiment, the overall length of the implant **900** is about 9 cm.

[0253] In the illustrated construction, the crossing profile of the implant **900** is determined by the diameter of the housing **920**, as illustrated in **FIG. 31B**. In one embodiment, the diameter of the housing **920** is selected so that the implant **900** may be delivered inside of a catheter having an lumen with a diameter in the range between 6 French (approximately 0.079 inches) and 20 French (approximately 0.262 inches). In one embodiment, the length of the housing **920**, as shown in **FIG. 31A** is in the range between about 3 mm and about 10 mm, preferably in the range between about 5 mm and about 8 mm, and more preferably in the range between about 6 mm and about 7 mm.

[0254] Referring to **FIG. 31D**, there is illustrated a disconnect subassembly **936**, in accordance with one embodiment of the present invention. The disconnect subassembly **936** illustrates one mechanism by which the implant **900** is decoupled from a delivery catheter and handpiece, as described in greater detail below. Disconnect subassembly **936** includes the distal ribbon **914**, a cover **938**, a cover pull-wire **940**, a tab **942**, and a tab pull-wire **944**. The pull-wire disconnect **918** of the distal ribbon **914** is engaged by a flange **946** protruding from the tab **942**, as shown in greater detail in **FIG. 31E**. A tab pull-wire **944** is coupled to the tab **942** such that proximal movement of the tab pull-wire **944** with respect to a catheter **948** (as shown in **FIG. 31F** and described in greater detail below) translates into proximal movement of the distal ribbon **914**, and distal tissue anchor **120** with respect to the proximal tissue anchor **118**.

[0255] A cover **938**, may comprise a stainless steel tube, is slid over the tab pull-wire **944** and distal ribbon **914**. The cover **938** keeps the flange **946** of the tab **942** engaged with the pull-wire disconnect **918** of the distal ribbon **914** as the tab pull-wire **944** is moved in the proximal direction. The cover **938** is coupled to a cover pull-wire **940** such that movement of the cover pull-wire **940** in the proximal direction moves the cover **938** proximally, thereby releasing the tab **942** from the pull-wire disconnect **918** of the distal ribbon **914**. In one embodiment, the cover pull-wire **940** is a stainless steel hyptotube, and the tab pull-wire **944** is a stainless steel hypotube or wire of a smaller diameter than the lumen of the cover pull-wire **940**. In one embodiment, the cover pull-wire **940** and tab pull-wire **944** are substantially concentrically aligned, such that the tab pull-wire **944** travels within the cover pull-wire **940** from the disconnect subassembly **936** to the handpiece **958** (as shown in **FIG. 32A**).

[0256] A catheter **948**, as shown in **FIG. 31F** may be removably coupled to the housing **920** of the implant **900** with a catheter coupling **950**. In one embodiment, the catheter coupling **950** includes a slot **952**, and two fingers **954**, which extend into the slot **952**. The fingers **954** are attached to the catheter **948**, such that axial and rotational movement of the catheter **948** translates into axial and rotational movement of the housing **920** and implant **900**. The slot **952** may be located on the housing **920**, and in one embodiment, is shaped so as to create a bayonet type coupling between the housing **920** and catheter **948**, as is known to those of skill in the art. In other embodiments, more or less than two fingers **954** are used to removably couple the housing **920** to the catheter **948**. In one embodiment, a circular ring, tabs, hooks or other devices well known to those of skill in the art, are used instead of fingers **954**.

[0257] In one embodiment, the fingers **954** are coupled to a release wire **956** such that proximal movement of the release wire **956** causes the fingers **954** to flex inward, and disengage from the slot **952** of the housing **920**. When disengaged, the catheter **948** may be rotated and moved proximally with respect to the housing **920** so as to decouple the catheter **948** from the implant **900**. In one embodiment, the release wire **956** is also coupled to the latch release ribbon **932** (shown in **FIG. 31A**). In one embodiment, proximal movement of the release wire **956** over a release distance causes the latch release ribbon **932** to disengage the latch **922** from the distal ribbon **914**. In addition, proximal movement of the release wire **956** over the release distance does not cause the fingers **954** to flex sufficiently to disengage from the slot **952** of the housing **920**, as described above.

[0258] In one embodiment, the release wire **956** comprises a hypotube with a lumen of sufficient diameter to contain the cover pull-wire **940** and tab pull-wire **944**. In one embodiment, the release wire **956**, cover pull-wire **940** and tab pull-wire **944** are all substantially coaxially aligned, and arranged such that the cover pull-wire **940** is at least partially within the release wire **956**, and the tab pull-wire **944** is at least partially within the cover pull-wire **940** as they travel proximally from the catheter coupling **950** and disconnect subassembly **936** to the handpiece, as described in greater detail below.

[0259] Referring now to **FIG. 32A**, there is illustrated a handpiece **958**, in accordance with another aspect of the present invention. Handpiece **958** includes a strain relief **960**, body **962**, distal actuator **964**, interlock **966**, and proximal actuator **968**. The release wire **956**, cover pull-wire **940**, and tab pull-wire **944** enter the handpiece **958** via a lumen of the strain relief **960**. The release wire **956** is coupled to a distal slider **970**, the cover pull-wire **940** is coupled to a center slider **972**, and the tab pull-wire **944** is coupled to a proximal slider **974**. The body **962** may be formed from two or more pieces that are, for example, machined from metal or plastic, and joined together. Alternatively, the body **962** may be formed from one piece of material, for example, plastic that is formed by injection molding.

[0260] In one embodiment, the distal actuator **964** is threadingly engaged with the body **962** such that rotation of the distal actuator **964** results in axial movement of the distal actuator **964** with respect to the body **962**. The distal actuator **964** is coupled to the distal slider **970** by at least one pin **976** (as shown in **FIG. 32B**) that is free to travel within an axial slot **978** in the body **962**. The distal slider **970** is coupled to the release wire **956** by welding, bonding, adhesion, crimping, or other method as is known to those of skill in the art. The catheter **948** extends from the handpiece **958** to the implant **900**, and is coupled to the implant **900** as described above, thereby fixing the axial position of the handpiece **958** with respect to the implant **900**. As a result of the multiple couplings as described, rotation of the distal actuator **964** is translated into axial movement of the release wire **956** with respect to the handpiece **958**, catheter **948**, and implant **900**. Proximal movement of the distal actuator **964** over the release distance, therefore causes the latch release ribbon **932** to move proximally sufficient to decouple the latch **922** from the distal ribbon **914**, as described in greater detail above. Furthermore, additional proximal movement of the distal actuator **964** causes the fingers **954** of the catheter coupling **950** to disengage from the slot **952** of the housing **920**, as described in greater detail above and below.

[0261] In one embodiment, the proximal actuator **968** is coupled to a threaded rod **980** such that rotation of the proximal actuator **968** causes the threaded rod **980** to rotate in the same direction. The threads of the threaded rod **980** engage threads located on an inside lumen of the center slider **972**, through which the threaded rod **980** extends. The inside lumen of the proximal slider **974**, through which the

threaded rod **980** also extends, does not contain threads. The interlock **966** includes two pins **976** which engage both the center slider **972** and the proximal slider **974**, and is free to move axially within a second axial slot **982** in the body **962**. The interlock **966** causes the center slider **972** and the proximal slider **974** to remain fixed with respect to one another. Therefore, as the center slider **972** is moved proximally with respect to the body **962** from rotation of the proximal actuator **968**, the proximal slider **974** move proximally with respect to the body **962** as well.

[**0262**] The interlock **966** may be removed from the handpiece **958** such that the center slider **972** and proximal slider **974** are no longer axially coupled. By removing the interlock **966**, the center slider **972** is able to be moved proximally with respect to the proximal slider **974**. Such adjustability is advantageous when manipulating the implant **900**, and catheter **948**, and during decoupling of the implant **900** from the catheter **948**, as described in greater detail below.

[**0263**] In one embodiment, the center slider **972** is coupled to the cover pull-wire **940**, such that proximal movement of the center slider **972** with respect to the body **962** results in proximal movement of the cover pull-wire **940** with respect to the catheter **948**. In one embodiment, the proximal slider **974** is coupled to the tab pull-wire **944**, such that proximal movement of the proximal slider **974** with respect to the body **962** results in proximal movement of the tab pull-wire **944** with respect to the catheter **948**.

[**0264**] In one embodiment, the implant **900** is transluminally delivered to and deployed inside of the coronary sinus of a medical patient according to the following procedure. An outer sheath (not shown) is transluminally delivered to a distal region of the coronary sinus by using methods well known to those of skill in the art. The exact location within the coronary sinus is determined by the medical practitioner according to the clinical requirements of the particular case. The outer sheath contains a lumen of sufficient diameter to receive the implant **900**. The implant **900** is coupled to the catheter **948**, which is coupled to the handpiece **958**, as described in greater detail above.

[**0265**] The implant **900** is advance distally to the distal tip of the outer tube by moving the handpiece **958** in the distal direction. The position of the implant **900** with respect to the outer tube and coronary sinus may be determined using fluoroscopic techniques, as are well known to those of skill in the art. When the implant **900** is properly positioned within the outer tube, within the coronary sinus, the outer tube is moved proximally, thereby exposing the distal tissue anchor **120**. As described above, the distal tissue anchor **120** is biased to rotate to engage the medial wall of the coronary sinus under the force of the distal tissue anchor **120** spring **912**. The handpiece **958** is then moved proximally to force the penetrating point **904** of the distal tissue anchor **120** into the heart tissue of the coronary sinus.

[**0266**] Once the distal tissue anchor **120** has adequately engaged the inside wall of the coronary sinus, the outer sheath is moved proximally, thereby exposing the proximal tissue anchor **118**. The shape of the proximal ribbon **902** allow proximal tissue anchor **118** to engage tissue.

[**0267**] The implant **900** is adjusted so that the distance between the proximal tissue anchor **118** and the distal tissue anchor **120** is reduced, and the shape of the mitral valve annulus is modified to improve clinical performance, as described in greater detail herein. The handpiece **958** is held and the proximal actuator **968** is rotated. Rotating the proximal actuator **968** causes the tab pull-wire **944** and cover pull-wire **940** to move proximally, as described above. Proximal movement of the tab pull-wire **944** and cover pull-wire **940** is translated into proximal movement of the distal ribbon **914**, as described above. The housing **920** of the tensioning element **190** is coupled to the catheter **948** at the catheter coupling **950**, and the catheter **948** is coupled to the handpiece **958**. Therefore, proximal movement of the cover pull-wire **940** and tab pull-wire **944** with respect to the handpiece **958** causes the distal ribbon **914** and distal tissue anchor **120** to move proximally with respect to the housing **920** and proximal tissue anchor **118**.

[**0268**] In one embodiment, the medical practitioner verifies the position and shape of the implant **900** and mitral valve annulus using visualization techniques as are well known to those of skill in the art, including fluoroscopy. If the medical practitioner determines that the distal tissue anchor **120** needs to be moved distally, in one embodiment, the following procedure is followed. The distal actuator **964** is rotated with respect to the handpiece **958** until the distal actuator **964** moves proximally a distance equal to the release distance, as described in greater detail above. By doing so, the release wire **956** is moved proximally a distance equal to the release distance, which causes the opening **930** in the latch release ribbon **932** to move proximally a distance equal to the release distance as well. Such movement lifts the tang **928** of the latch **922** out of the slot **916** of the distal ribbon **914**, so that the distal ribbon **914** may thereafter be moved distally by rotating the proximal actuator **968** in the opposite direction as rotated above.

[**0269**] When the implant **900** is properly positioned, and the distance between the proximal tissue anchor **118** and the distal tissue anchor **120** has been adjusted to the appropriate dimension, the medical practitioner may then conclude the medical treatment by removing the catheter from the medical patient. To do so, in one embodiment, the catheter **948** is decoupled from the housing **920** of the implant **900**, and the cover pull-wire **940** and tab pull-wire **944** are decoupled from the distal ribbon **914**.

[**0270**] To decouple the cover pull-wire **940** and tab pull-wire **944** from the distal ribbon **914**, the interlock **966** is removed from the handpiece **958**, and the proximal actuator **968** is rotated with respect to the handpiece **958**. As the proximal actuator **968** is rotated with the interlock **966** removed, the center slider **972** moves proximally with respect to the proximal slider **974**, which causes the cover pull-wire **940** to move proximally with respect to the tab pull-wire **944**. Proximal movement of the cover pull-wire **940** causes the cover **938** to move proximally with respect to the tab **942**, thereby allowing the tab **942** to disengage from the pull-wire disconnect **918** of the distal ribbon **914**. The tab **942** may disengage from the pull-wire disconnect **918** under its own bias, or may be removed therefrom by rotating the handpiece **958**, as described below.

[**0271**] To decouple the catheter **948** from the housing **920** of the implant **900**, the distal actuator **964** is rotated until it moves proximally with respect to the handpiece **958** over a distance sufficiently greater than the release distance. In one embodiment, the distal actuator **964** is rotated until its

proximal movement is limited by interference between the pin **976** and the proximal edge of the axial slot **978**. Such movement causes the fingers **954** attached to the distal end of the catheter **948** flex inward a distance sufficient to clear the slot **952** in the housing **920**, and latch release ribbon **932** is fully withdrawn, as described above. The handpiece **958** is then rotated and moved proximally, which causes the fingers **954** of the catheter **948** to rotate and move out of the housing **920** slot **952**. In one embodiment, the rotation and proximal movement of the handpiece **958** also causes the flange **946** of the tab **942** to disengage from the pull-wire disconnect **918** of the distal ribbon **914**. The catheter **948** is then removed from the patient's body by pulling it proximally out of the outer tube.

[**0272**] Referring to **FIG. 33**, there is illustrated a side elevational view of an implant in accordance with the present invention. The implant includes a distal anchor, **120** which is shown in additional detail in **FIG. 34**. The distal anchor **120** comprises a sharpened proximal end **702** for penetrating tissue. The distal end **704** is pivotally attached to the implant wall, such as by one or more pins **706** rotatably received within an aperture in the tubular wall. The distal anchor is moveable between a first position in which it extends parallel to the longitudinal axis of the implant, to provide a low crossing profile, and a second position as illustrated in **FIG. 34** when the tissue anchor is inclined radially outwardly from the longitudinal axis of the implant to engage tissue. Additional details of the distal anchor mechanism are illustrated in **FIG. 36**.

[**0273**] The proximal end of the implant **710** is illustrated in **FIG. 35**. The implant includes a proximal tissue anchor **712**, which inclines radially outwardly away from the implant in the distal direction, on the mitral valve side of the device, for engaging the wall of the coronary sinus. Any of a variety of deployment mechanisms may be utilized for the proximal tissue anchor **712**.

[**0274**] One or more of the proximal and distal anchors may be provided with a lateral alignment or biasing element for advancing the device laterally within the vessel so that the mitral valve side of the device is positioned against the coronary sinus wall. This will allow deployment of the proximal and distal anchors to fully engage the adjacent tissue. The lateral alignment structure illustrated in **FIG. 35** is in the form of a flexible wire, strip, or loop **714** which, when released from the deployment catheter and/or advanced out of the implant, will reside within the coronary sinus and provide a lateral spring bias against the implant. In the illustrated embodiment, the loop **714** is in the form of a biased wire, such as nitinol. Any of a variety of structures may be utilized for maintaining the implant off center within the vessel, to optimize engagement of the tissue anchors with the vessel wall. For example, an inflatable side balloon on either the distal end of the deployment catheter or on the implant may be inflated during the tissue engaging step. Any of a variety of expandable wire cages may be mounted off center on either the implant or the distal end of the deployment catheter, for laterally moving the implant off center within the vessel.

[**0275**] Referring to **FIG. 36**, there is illustrated a side elevational schematic view of the implant illustrated in **FIGS. 33 through 35**. As seen therein, the distal anchor **120** may be activated by axial proximal tension on the pull wire **720**. The pull wire **720** is pivotally connected to the distal anchor **120**, at a position which is offset laterally from an axis of rotation. The axis of rotation is concentric with one or more pins **706** which pivotally retain the distal anchor **120** in position at the distal end **722** of the implant. In the illustrated embodiment, proximal axial advancement of the pull wire **720** will cause the distal anchor **120** to incline radially outwardly with respect to the longitudinal axis of the implant.

[**0276**] A spine support **722** is illustrated at the central segment of the implant. Spine support **722** may comprise any of a variety of elements, such as a flexible ribbon of stainless steel, nitinol or other material, for enhancing the column strength of the implant in this region.

[**0277**] The proximal end **710** of the implant is illustrated in greater detail in **FIG. 37**. As seen therein, the anchor hoop **714** is schematically illustrated. Anchor hoop **714** may comprise any of a variety of structures, such as a loop as illustrated in **FIG. 35** or other resilient element which may be biased radially outwardly from the longitudinal axis of the implant to contact the opposing side of the vessel wall and bias the proximal anchor hook **712** in the direction of the mitral valve side of the vessel wall.

[**0278**] In any of the embodiments disclosed herein, in which a tubular body is provided, the space within the tubular body may be utilized to carry any of a wide variety of drug delivery vehicles. For example, microporous beads, filaments or other structures may be carried within the tubular body. Any of a variety of dissolvable or absorbable gels or other carriers may be utilized, for carrying one or more active agents, for delivery from the implant into the vessel or vessel wall. The active agent may be released from the carrier using any of a variety of known drug delivery techniques, such as by erosion of the carrier, migration of the active agent through a microporous structure, or other as is known in the drug delivery arts.

[**0279**] The active agent carrier carried within the implant may be provided with any of a variety of active agents. These agents include anticoagulants, anti-inflammatory agents, drugs to inhibit smooth muscle cell proliferation or other responses to injury, antibiotics, drugs to enhance endothelial growth, or others known in the art.

[**0280**] Although the preceding discussion has been primarily in the context of devices for encircling or positioning adjacent the mitral valve annulus, the valve leaflet orientation locator described below may be used in a wider variety of anatomies. In human pathology, the proper functioning of both cardiac and venous valves is of paramount importance. Disorders of cardiac valves causes significant morbidity and mortality. These disorders effect persons of all ages and can result from congenital or degenerative conditions, as well as from sequelae of infections. Stenosis and insufficiency of the aortic or mitral valves have a greater incidence than stenosis and insufficiency of the tricuspid and pulmonary valves. However, various interventional therapies, including surgical procedures and implants may desirably be utilized in connection with each of these valves. In addition, venous insufficiency is believed to contribute to various maladies, including edema, varicose veins, aching leg pain while standing, lipodermatosclerosis, and ulcerations. Venous insufficiency is essentially caused by venous hypertension and chronic venous stasis due to valvular incompetence both

of an idiopathic nature and of a secondary nature following past illnesses of the venous systems. For many transluminal therapies and potential therapies for any of these valves, the orientation of the valvular leaflets during both the "open" and "closed" configurations may be important information for the clinician. Thus, although the discussion below will be primarily in the context of the mitral valve, it is to be understood that the leaflet orientation locator of the present invention may be more broadly applicable to any valve, sphincter, or other dynamic portion of a lumen or hollow organ in the body.

[0281] Referring to **FIG. 38**, there is provided a partial cross sectional view of a heart **750**, illustrating an aortic approach to the mitral valve in accordance with one embodiment of the present invention. The heart **750** includes four chambers, known as the right atrium **752**, right ventricle **754**, left atrium **756**, and left ventricle **758**. The heart **750** also includes four valves, known as the mitral valve **760**, tricuspid valve **762**, aortic valve **764**, and pulmonary valve **765**. A septum **766** extends along a longitudinal axis of the heart **750**, and separates the right atrium **752** and right ventricle **754** from the left atrium **756** and left ventricle **758**.

[0282] Deoxygenated blood enters the right atrium **752** of the heart **750** from the upper extremities via the superior vena cava **768** and from the lower extremities via the inferior vena cava **770**. As the heart **750** beats, deoxygenated blood is pumped from the right atrium **752** through the tricuspid valve **762** and into the right ventricle **754**. From the right ventricle **754** the deoxygenated blood is pumped through the pulmonary valve **765** to the lungs. After the lungs oxygenate the blood, it returns to the left atrium **756** of the heart **750** via the pulmonary veins **773**. As the heart **750** beats, the oxygenated blood is pumped from the left atrium **756** through the mitral valve **760** and into the left ventricle **758**. From the left ventricle **758**, the oxygenated blood is pumped through the aortic valve **764** to the aorta **774**, where it is distributed throughout the rest of the body.

[0283] As illustrated in FIGS. **38**A-C, the mitral valve **760**, tricuspid valve **762**, aortic valve **764**, and pulmonary valve **765** (not shown) include two or more opposing coaptive leaflets **776**, which function to control the flow of blood through the valves. Proper coaptation of the leaflets **776** allows the mitral valve **760**, tricuspid valve **762**, aortic valve **764**, and pulmonary valve **765** to limit the flow of blood to only one direction.

[0284] For example, during the portion of the heart beat known as diastole, blood accumulating in the left atrium **756** is passed through the mitral valve **760**, and into the left ventricle **758**. The mitral valve **760** in diastole is illustrated in **FIG. 38E**. During diastole, the mitral valve **760** leaflets **776** open, as shown in greater detail in **FIG. 38F**, so that blood may flow through. During systole, the heart **750** contracts, pressurizing the blood accumulated in the left ventricle **758**. The pressurized blood causes the leaflets **776** of the mitral valve **760** to come together, as illustrated in **FIGS. 38A and 38D**, thereby preventing blood flow back into the left atrium **756**. The pressurized blood is instead pumped through the aortic valve **764** to the aorta **774**.

[0285] As is discussed further in connection with **FIG. 42**, coaptive edges of adjacent valve leaflets lie generally along a plane which is parallel to blood flow through the valve and which lies between the two leaflets. A transverse coaptation axis **788** (see **FIG. 38A**) lies on the plane of coaptation.

[0286] In accordance with the leaflet orientation aspect of the present invention, a conformable device is positioned across the valve under evaluation. The device is sufficiently conformable that it will reconfigure in response to pressure exerted by the closing valve leaflets, such that it can provide an indication of the spacial orientation of the coaptation axis **788**. In certain embodiments, in addition to allowing determination of the orientation of the coaptation axis, the orientation device of the present invention will also allow evaluation of the axial length of the coaptive edges, lying in the plane of the coaptation axis. This will allow, for example, orientation of other catheters or devices at a position which is both spaced apart from the coaptive axis and centered on or otherwise positioned with respect to a transverse axis which crosses through the center of the valve as will be discussed below.

[0287] In one embodiment, as illustrated in **FIG. 38**, a delivery catheter **778** is inserted into the aorta **774**, and advanced through the aortic valve **764** into the left ventricle **758** of the heart **750**. The distal end of the delivery catheter **778** is oriented so that it faces the mitral valve **760**.

[0288] Referring to **FIG. 39**, a conformable target or leaflet locator **780** for conforming to the closed leaflets is deployed from the delivery catheter **778** such that the leaflet locator **780** spans or at least partially enters the mitral valve **760**. The leaflet locator **780** may also be used to image aortic, tricuspid, and pulmonary valve coaptation. A conformable target **780** can be used in a variety of anatomical environments in which it may be desireable to determine the orientation and shape of the surrounding tissue structure. In embodiments of the present invention described herein, the conformable target **780** may be used primarily as a leaflet locator **780**.

[0289] The leaflet locator may comprise any of a variety of structures, such as wires, baskets, or membranes which are sufficiently conformable that they will be compressed by the surrounding tissue, including closing leaflets to conform to the surrounding tissue's coaptive edges. The leaflet locator is preferably also radiopaque, or carries a radiopaque coating or markers, to allow visualization of the primary coaptation axis.

[0290] As shown in greater detail in **FIG. 41A**, one leaflet locator **780** includes at least one, two or three or more locating elements or fingers **782** that are at least partially positioned between the leaflets **776** of the mitral valve **760**. The locating fingers **782** may be made from a radiopaque material, such as nickel-titanium, tantalum, or gold wires. Although other dimensions may also be used, the locating fingers may each comprise a wire having a diameter within the range of from about 0.001" to about 0.015", and a length within the range of from about 5 mm to about 80 mm.

[0291] In one embodiment, the locating fingers **782** each include a radiopaque marker **784** that may be located on the distal end of the locating finger **782**, or positioned elsewhere thereon. The marker **784** may include plating, such as gold plating, or a mechanically attached marker, such as a crimped gold or tantalum band. Many other materials and methods of attachment as known to those of skill in the art may be used instead, or in addition to those described above.

[0292] A device for determining valve leaflet orientation, which can be readily adapted to carry any of a variety of

leaflet locator structures, is illustrated schematically in **FIGS. 40A through 40E**. Referring to **FIG. 40A**, there is illustrated a side elevational schematic view of a catheter **778** having an elongate flexible tubular body **600** extending between a proximal end **602** and a distal end **604**. The tubular body **600** may be manufactured in accordance with any of a variety of techniques well understood in the intravascular catheter arts, such as extrusion from any of a variety of materials including PEEK, PEBAX, various densities of polyethylene, nylon, and others known in the art. The dimensions of the tubular body will be selected based upon the desired percutaneous access site as well as the target valve. For example, in an embodiment of the catheter **778** intended for a femoral access, for placement within the mitral valve, the tubular body **600** may have a length within the range of from about 110 cm to about 140 cm. The outside diameter of the tubular body will generally be no greater than about 0.131" (10 French).

[**0293**] In one embodiment, the catheter distal end **604** is pre-shaped or pre-curved, so that it is properly oriented when approaching the valve. For example, the cathether distal end **604** may be pre-shaped such that the longitudinal axis of the catheter's distal end **604** is substantially directed towards the center of the mitral valve annulus as the catheter **778** is placed into the left atrium or left ventricle of the heart. Techniques for pre-shaping and pre-curving catheters are well known in the art. For example, such techniques are well known for shaping guide cathethers.

[**0294**] The proximal end **602** of the tubular body **600** is provided with a manifold **606** as is known in the art. Manifold **606** may be injection molded or otherwise formed in accordance with known techniques. In the illustrated embodiment, manifold **606** is provided with a guidewire access port **608**. Guidewire access port **608** is provided in an embodiment of the catheter **778** intended for advancement over the wire. For this purpose, guidewire access port **608** is in communication with a guidewire lumen **610**, and a distal guidewire port **612** as is understood in the art. Alternatively, the catheter **778** may be configured for rapid exchange, in which case the proximal guidewire access port **608** will be positioned along the side wall of the tubular body **600** within about 5 or 50 cm from the distal end **604**.

[**0295**] As a further alternative, the guidewire lumen **610** and associated access ports may be omitted. This may be desirable, for example, in an embodiment in which the catheter **778** is intended to be advanced transluminally through a tubular guide catheter.

[**0296**] The manifold **606** may additionally be provided with a control **614**. The illustrated control **614** is in the form of a slider switch **616**. However, any of a variety of controls **614** may be utilized, such as rotatable knobs, compressible grips, triggers, buttons, slider rings, or others depending upon the desired performance characteristics.

[**0297**] Control **614** is mechanically coupled to a control wire **789**, which extends axially throughout the length of the tubular body **600** to a point of connection with the conformable target **780**. For this purpose, the tubular body **600** is provided with a control wire lumen **618**, as illustrated in **FIG. 40B**.

[**0298**] The control wire **789** has sufficient pushability that, upon distal advance of the slider **616**, the conformable target **780** is deployed from the distal end **604** (as shown in **FIG. 40A**) of the catheter **778**. See **FIG. 40D**. Proximal retraction of the slider **616** will draw the conformable target **780** proximally within the tubular body **600**, such as following observation of the coaptation axis.

[**0299**] As illustrated in **FIG. 40C**, the distal end **604** of the tubular body **600** may be provided with a cavity **620** which may be in communication with or an enlargement of the control wire lumen **618**. Cavity **620** provides a housing for the proximally retracted conformable target **780**.

[**0300**] In the foregoing construction of catheter **778**, distally advancing the control **614** causes the conformable target **780** to advance distally from the distal end **604** of the catheter **778**. In an alternative configuration, the conformable target **780** is deployed without axial advance, such as by proximal retraction of an outer restraint. One implementation of this construction is illustrated schematically in **FIG. 40E**.

[**0301**] Referring to **FIG. 40E**, the catheter **778** comprises a proximal tubular body segment **624** which may extend from the manifold **606** distally to within about 5 or 10 cm from the distal end **604**. The proximal tubular segment **624** terminates at a distal end **626**. A distal tubular segment **628** extends concentrically within the proximal tubular segment **624**, and beyond the distal end **626**. Distal tubular segment **628** is axially moveably carried with respect to proximal tubular segment **624**.

[**0302**] A control wire **630** is attached such as by adhesive bonding or other known technique to the distal tubular segment **628**. Control wire **630** extends proximally to a control **614** on the manifold **606** as has been discussed. Proximal retraction of the control wire **630** will cause the distal tubular segment **628** to retract proximally concentrically within the proximal tubular segment **624**.

[**0303**] An inner tube **632** extends throughout the length of the catheter **778**. Inner tube **632** may be provided with a central lumen **610** such as a guidewire lumen, as has been discussed. Otherwise, the inner tube **632** may be utilized to inject radiopaque dye and/or medications during the procedure.

[**0304**] A conformable target **780** is attached to the inner tube **632**. In this configuration, the distal tubular segment **628** is moveable between a first, distal orientation in which the conformable target **780** is contained within the distal tubular segment **628**, and a second, proximal orientation in which the conformable target **780** is exposed beyond the distal end of the distal tubular segment **628**. Manipulation of the control **614** will allow the distal tubular segment **628** to be extended or retracted, without axial movement of the conformable target **780**, for positioning advantages that will be understood by those of skill in the art. In one embodiment, conformable target **780** does not substantially advance during deployment. This allows conformable target **780** to be positioned at the desired axial location and coaptation to be determined without repositioning the catheter **778**. Coaptation may be determined simply by sliding distal tubular segment **628** to expose the conformable target **780**.

[**0305**] The conformable target **780** may be attached to the inner tube **632** in any of a variety of ways, depending upon the nature of the conformable target. In the illustrated embodiment, the conformable target **780** comprises a plu-

rality of distally extending radiopaque elements **782**. Elements **782** may be bonded to the inner tube **632** using any of a variety of known techniques, such as adhesives. In addition or as an alternative, an attachment band **781** may be heat shrunk, crimped, or otherwise attached to the distal end of the inner tube **632** to entrap the proximal ends of the flexible element **782**. In an embodiment not intended to preserve the use of the central lumen **610**, the proximal end of the conformable target can be potted within the distal opening of lumen **610**.

[**0306**] The locating fingers **782** may be unbound at their distal ends, as illustrated in **FIGS. 40E and 41A**, or may be bound at one or more ends. **FIG. 41B** illustrates another embodiment where the locating fingers **782** are bound at both their proximal and distal ends to form a basket **786**. The basket **786** includes axially extending locating fingers **782** as well as optional circumferentially spanning supports **787**. The basket **786** may include one or more markers **784**, such as described in greater detail above.

[**0307**] In different implementations of the invention, the leaflet locator **780** includes at least about three, four, eight, sixteen, or **24** locating fingers **782**. In another construction, the leaflet locator **780** includes at least three locating fingers **782**. In general, the leaflet locator **780** includes between about one and about 24 locating fingers **782**, often between about three and about twenty locating fingers **782**.

[**0308**] The locating fingers **782** extend an extension distance measured from the distal end of the delivery catheter **778** to the distal end of at least one locating finger **782**. In different constructions, the extension distance is at least about 10, 20, 40, or 80 mm depending upon the valve under evaluation. In general, the extension distance is in the range between about 5 and 60 mm, often between about 10 and about 40 mm.

[**0309**] The basket **786** may be axially movable with respect to the delivery catheter **778** by use of an axially movable control wire **789**. Control wire **789** may comprise wire having sufficient pushability that force applied to the basket **786** with the wire **789** does not cause the wire **789** to bend or kink under compression. Once delivered, the basket **786** assumes an expanded shape, such as, for example, a lemon-like shape as illustrated in **FIG. 41B**. The basket **786** assumes the expanded shape under its own bias, such as for example, when the locating fingers **782** are made from shape memory metals, or spring wire. Alternatively, the basket **786** assumes the expanded shape under force of an expander, such as axial compression structures or a balloon (not shown), by using balloon expansion techniques well known to those of skill in the art.

[**0310**] Referring to **FIG. 42**, as the heart **750** pumps and the leaflets **776** of the mitral valve **760** close, the locating fingers **782** of the leaflet locator **780** are brought into alignment with respect to a coaptation axis **788** of the mitral valve **760**. As described in greater detail above, the leaflets **776** of the mitral valve **760** of a patient suffering from mitral valve regurgitation do not properly coapt during systole, and a gap **790** remains between them. When there is a gap **790** between the mitral valve **760** leaflets **776**, the locating fingers **782** of the leaflet locator **780** may become oriented as illustrated in **FIG. 42**. Thus, as used herein, the term "coaptation axis" shall refer to a primary axis such as the major diameter on an ellipse, since the radiopaque elements within the closed valve may not line up in a perfectly linear fashion.

[**0311**] Using imaging techniques well known to those of skill in the art, such as fluoroscopy or transesophageal echocardiography (TEE), the practitioner is able to observe the orientation of the locating fingers **782** within the mitral valve **760**. By observing the orientation of the locating fingers **782**, the medical practitioner may assess the functionality of the mitral valve **760**, and determine the orientation of the coaptation axis **788** extending therethrough. In addition, the practitioner may also determine the orientation of other axes with respect to the coaptation axis **788**, such as an axis transverse to the coaptation axis, including a transverse pressure axis **791**. In one embodiment, a transverse pressure axis **791** is an axis which substantially bisects a leaflet **776** of the mitral valve **760**, and is perpendicular to the coaptation axis **788**. In another embodiment, the transverse pressure axis **791** is an axis laterally offset from and parallel to an axis which substantially bisects a leaflet **776** of the mitral valve **760**, and which is perpendicular to the coaptation axis **788**. In yet another embodiment, the transverse pressure axis **791** extends at an angle with respect to an axis which substantially bisects a leaflet **776** of the mitral valve **760** and which is perpendicular to the coaptation axis **788**, and the transverse pressure axis **791** is within the plane defined by the coaptation axis **788** and an axis which substantially bisects a leaflet **776** of the mitral valve **760**.

[**0312**] In one embodiment, the practitioner positions an implant or prosthesis within the coronary sinus, such as described in any of the embodiments described with respect to **FIGS. 1-37** above. The practitioner positions the implant or prosthesis with respect to the coaptation axis **788**, or other axis as described above, such as the transverse pressure axis **791**. In one embodiment, as illustrated in **FIG. 42A** an implant is designed to assume a "W" shape when deployed, such as implant **710** described in greater detail above with respect to **FIGS. 33-37**. The peak **822** at the center of the "W" shaped implant **710** is oriented with respect to the transverse pressure axis **791** in one embodiment, so as to control placement of pressure upon a portion of the inside wall of the coronary sinus **824**. The peak **822** is positioned in contact with a portion of the inside wall of the coronary sinus **824** that is substantially intersected by the transverse pressure axis **791** of the mitral valve **760**. In another embodiment, the peak **822** is positioned in contact with a portion of the inside wall of the coronary sinus **824** that is an offset distance (not shown) from the portion of the inside wall of the coronary sinus **824** that is substantially intersected by the transverse pressure axis **791** of the mitral valve **760**. In addition, the proximal and distal anchors **712**, **120** may be positioned within the coronary sinus **824** with respect to the coaptation axis **788** or transverse pressure axis **791** so as to control the placement of pressure applied to the mitral valve **760**.

[**0313**] In another embodiment, as illustrated in **FIG. 42B** an implant is designed to assume a "C" shape when deployed, such as implant **711**, or any "C" shaped implant described in **FIGS. 1-37** above. A peak **822** at one end of the "C" shaped implant **711** is oriented with respect to the transverse pressure axis **791** in one embodiment, so as to control placement of pressure upon a portion of the inside wall of the coronary sinus **824**. The peak **822** is positioned

in contact with a portion of the inside wall of the coronary sinus **824** that is substantially intersected by the transverse pressure axis **791** of the mitral valve **760**. In another embodiment, the peak **822** is positioned in contact with a portion of the inside wall of the coronary sinus **824** that is an offset distance (not shown) from the portion of the inside wall of the coronary sinus **824** that is substantially intersected by the transverse pressure axis **791** of the mitral valve **760**. In addition, the proximal and distal anchors **712**, **120** may be positioned within the coronary sinus **824** with respect to the coaptation axis **788** or transverse pressure axis **791** so as to control the placement of pressure applied to the mitral valve **760**.

[**0314**] For example, as illustrated in **FIG. 42C**, an implant **900**, such as that described above with respect to FIGS. **31**A-F, is placed within the coronary sinus to apply pressure to the mitral valve **760**. In one embodiment, the distal anchor **120** is positioned with respect to the coaptation axis **788** or transverse pressure axis **791** so as to control the placement of pressure upon a portion of the inside wall of the coronary sinus **824**. The distal anchor **120** is positioned in contact with a portion of the inside wall of the coronary sinus **824** that is an offset distance **826** from the portion of the inside wall of the coronary sinus **824** that is substantially intersected by the coaptation axis **788** or transverse pressure axis **791** of the mitral valve **760**. In another embodiment, the proximal anchor **118** of the implant **900** is positioned in contact with a portion of the inside wall of the coronary sinus **824** that is an offset distance **826** from the portion of the inside wall of the coronary sinus **824** that is substantially intersected by the coaptation axis **788** or transverse pressure axis **791** of the mitral valve **760**.

[**0315**] It is well understood by those of skill in the art that any implant or prosthesis able to apply pressure to the heart **750**, including any of the implants or prostheses described above with respect to **FIGS. 1-37**, may be utilized. Remotely activated implants, such as those disclosed in Provisional Application Ser. No. 60/488,334, filed Jul. 18, 2003, titled "REMOTELY ACTUATED MITRAL ANNULOPLASTY SYSTEM AND METHODS," hereby incorporated by reference in its entirety, may be utilized as well. In addition, although the embodiments described position a portion of an implant with respect to the coaptation axis **788** or transverse pressure axis **791** of the mitral valve **760**, the implant portions may be positioned with respect to other axes visualized or determined upon visualization of the leaflet locator **780** locating fingers **782**.

[**0316**] In another embodiment, the peaks **822** or anchors **118**, **120**, **712** of FIGS. **42**A-C or any other suitable implant or prosthesis as described above, are positioned in contact with a portion of the inside wall of the coronary sinus **824** located within a contact zone (not shown). The contact zone may be defined by the transverse pressure axis **791** and an offset distance. In another embodiment, the contact zone is defined by first and second axes extending at first and second angles with respect to the transverse pressure axis **791**, and intersecting the coronary sinus **824**. In one embodiment, the first and second axes intersect the point defined by the intersection of the transverse pressure axis **791** and coaptation axis **788**.

[**0317**] Referring to **FIG. 43**, there is provided a partial cross sectional view of a heart **750** illustrating a transeptal approach embodiment of a method of the present invention. A delivery catheter **778** is inserted into the right atrium **752** via the inferior vena cava **770**, where it is pushed through the septum **766** of the heart **750**, and into the left atrium **756**. The distal end of the delivery catheter **778** is oriented so that it faces the mitral valve **760**, as shown. The leaflet locator **780** is deployed from the delivery catheter **778** such that the locating fingers **782** extend in the direction from the left atrium **756** to the left ventricle **758**, and at least one of the locating fingers **782** is at least partially between the leaflets **776** (not shown) of the mitral valve **760**. It will be understood by those of skill in the art that other approaches to the mitral valve **760** may be utilized, including a transeptal approach where the delivery catheter **778** enters the heart **750** via the superior vena cava **768**.

[**0318**] Referring to **FIG. 44**, there is illustrated another embodiment of a leaflet locator **780**, including a pigtail catheter **792** and markers **784**. The pigtail catheter **792** includes a curved portion **793** and a substantially straight portion **795**. Markers **784** are disposed along the curved portion **793**, as shown in the embodiment of **FIG. 44**. Markers **784** may be any material able to be visualized under visualization techniques well known to those of skill in the art, including fluoroscopy and TEE, as described in greater detail above.

[**0319**] In one embodiment, pigtail catheter **792** includes four markers **784**. In another embodiment, pigtail catheter **792** includes at least three markers **784**. In another embodiment, the pigtail catheter **792** includes only one marker **784**. At least a substantial portion of the curved portion **793** of the pigtail catheter **792** may be plated, loaded, or coextruded with a visualizable marker **784** such that it may be identified using any of the visualization techniques described in greater detail above.

[**0320**] The pigtail catheter **792** is inserted between the leaflets **776** of the mitral valve **760** such that the leaflets **776** are in at least partial contact with the curved portion **793** of the pigtail catheter **792**. As the leaflets **776** come together, the curved portion **793** of the pigtail catheter **792** is rotated by the closing leaflets at least partially about an axis defined by the substantially straight portion **795** of the pigtail catheter **792**. Once rotated, the curved portion **793** of the pigtail catheter **792** is aligned with respect to the coaptation axis **788** of the mitral valve **760**, as illustrated in **FIG. 44A**.

[**0321**] Referring to **FIG. 45**, there is provided a leaflet locator **780** in accordance with another embodiment of the present invention. The leaflet locator **780** includes a pigtail catheter **792**, wire **789**, and basket **786**. The pigtail catheter **792** and basket **786** are similar to those described in greater detail above. However, the pigtail catheter **792** includes a skive **794** located adjacent the portion of the pigtail catheter **792** where the curved portion **793** of the pigtail catheter **792** meets the substantially straight portion **795** of the pigtail catheter **792**. A wire **789** is coupled to the basket **786**, and both are initially disposed within a central lumen (not shown) of the pigtail catheter **792**. As the pigtail catheter **792** is positioned at the delivery site, for example within the left ventricle **758**, the wire **789** is slid longitudinally with respect to the substantially straight portion **795** of the pigtail catheter **792**. As the wire **789** is so slid, the basket **786** and wire **789** exit the pigtail catheter **792** at the skive **794**, moving in the direction of the mitral valve **760**. The wire **789** is moved

until at least a portion of the basket **786** is positioned at least partially between the leaflets **776** of the mitral valve **760**. Furthermore, locating fingers **782** may be thermally fused to inner tube **800**.

[**0322**] **FIG. 46** illustrates another leaflet locator **780** in accordance with yet another embodiment of the present invention. A leaflet locator **780** includes an outer tube **798**, an inner tube **800**, and locating fingers **782** spanning therebetween. An atraumatic tip **802** is disposed on one end of the inner tube **800**. The locating fingers **782** are attached to the outer tube **798** at attachment windows **804**. Locating fingers **782** may be bonded to the outer tube **798** using adhesives well known to those of skill in the art, such as polymer materials, or cyanoacrylate. Alternatively, a mechanical attachment, such as a pin, plug, band, ring, knot, anchor, or other structure suitable for such attachment, as is well know to those of skill in the art, may be used to attach locating fingers **782** to outer tube **798**.

[**0323**] The outer tube **798** includes a central lumen extending at least partially therethrough, inside of which is placed at least a portion of inner tube **800**. Inner tube **800** includes a central lumen extending at least partially therethrough, so that the leaflet locator **780** may be delivered to the deployment site (such as, for example, the left ventricle **758**) via a guidewire (not shown), in either an over-the-wire or rapid exchange mode.

[**0324**] The inner tube **800** includes an atraumatic tip **802** so that as the leaflet locator **780** is advanced over the guidewire, the tissues surrounding the guidewire are not traumatized by the distal end of the inner tube **800**. In addition, the atraumatic tip **802** may serve as an anchor to secure the distal ends of the locating fingers **782**. Alternatively, any of the attachments described above may be used to attach locating fingers **782** directly to the inner tube **800**, such as at the distal end of the inner tube **800**, or to the atraumatic tip **802**.

[**0325**] As the inner tube **800** is moved longitudinally with respect to the outer tube **798**, the locating fingers **782** bend to form locating wings **808**, such as illustrated in **FIG. 47**. The angle of bend **809** as well as the wing span **812** may be controlled by controlling the distance the inner tube **800** is moved with respect to the outer tube **798**. The angle of bend **809** will generally decrease and the wing span **812** will generally increase as the atraumatic tip **802** is moved closer to the distal end of the outer tube **798**, as illustrated in **FIGS. 48-48A**.

[**0326**] The locating fingers **782** may comprise a radiopaque material to enable visualization. Visualization may be enhanced by including coiled radiopaque wires **783** wound around the locating fingers **782**, as illustrated in **FIG. 48C**. As the inner tube **800** is moved longitudinally with respect to the outer tube **798**, the locating fingers **782** bend to form locating wings **808** of locating fingers **782** carrying multiple loops **810** of radiopaque wires **783**, such as illustrated in **FIGS. 48B** and C.

[**0327**] Radiopaque wires **783** allow visualization of the locating wings **808** according to the methods described in greater detail above. By adjusting or selecting various properties of the radiopaque wires **783**, quality of visualization and flexibility of the locating wings **808** may be controlled. For example, quality of visualization and flexibility of the locating wings **808** can be affected by the diameter, cross sectional shape, and winding density (typically specified in windings per unit length) of the radiopaque wires **783**. In one embodiment, the diameter of the radiopaque wires **783** is in the range of about 0.001" to about 0.015", in the range of about 0.002" to about 0.010", or about 0.005". In one embodiment, the cross sectional shape of the radiopaque wires **783** is circular, elliptical, square, rectangular, pentagonal, hexagonal, or octagonal. Other cross sectional shapes, or combinations thereof, may be selected, as is known to those of skill in the art. Different portions of a radiopaque wire **783** may have different cross sectional shapes, or different radiopaque wires **783** may have different cross sectional shapes. In one embodiment, the radiopaque wires **783** have a winding density in the range of about 1000 windings/in to about 67 windings/in, about 500 windings/in to about 100 windings/in, or about about 300 windings/in to about 200 windings/in. In one embodiment, the radiopaque wires **783** have a winding density of about 200 windings/in.

[**0328**] Quality of visualization and flexibility of the locating wings **808** may additionally be controlled by controlling the diameter of the loop **810** formed from the radiopaque wires **783**. In one embodiment, the inside diameter of the loop **810** is approximately equal to the outside diameter of the locating finger **782**. Alternatively, the inside diameter of the loop **810** formed from the radiopaque wires **783** is in the range of about 0.001" to about 0.015", in the range of about 0.002" to about 0.010", or about 0.005". In another embodiment, the diameter of the loop **810** formed from the radiopaque wires **783** is in the range of about 0.015" to about 0.025", or in the range of about 0.025" to about 0.035".

[**0329**] Referring to FIGS. **49**A-E, there is provided another leaflet locator **780** in accordance with yet another embodiment of the present invention. Leaflet locator **780** includes an outer tube **798**, an inner tube **800**, and locating fingers **782** in the form of loops **810** extending from the distal end of the outer tube **798** to the distal end of the inner tube **800**. As the inner tube **800** is moved longitudinally with respect to the outer tube **798**, the locating finger **782** loops **810** are pushed out of the central lumen of the outer tube **798** to form a whisk-like shape. When fully deployed, the leaflet locator **780** of the present embodiment assumes the form illustrated in **FIG. 49E**, with locating wings **808** extending radially with respect to the inner tube **800**.

[**0330**] The leaflet locator **780** of any of **FIGS. 46-49F** is inserted between the leaflets **776** of the mitral valve **760** such that the leaflets **776** are in at least partial contact with the locating wings **808** or loops **810** of the leaflet locator **780**, as illustrated in **FIG. 50**. As the leaflets **776** come together, the locating wings **808** or loops **810** of the leaflet locator **780** are rotated at least partially about the inner tube **800**. Once rotated, the locating wings **808** or loops **810** will become substantially aligned with respect to the coaptation axis **788** of the mitral valve **760**, such that they may be visualized as illustrated in **FIG. 50**.

[**0331**] Although the present invention has been described in terms of certain preferred embodiments, it may be incorporated into other embodiments or performed through other steps by persons of skill in the art in view of the disclosure herein. In addition, features from any one of the embodiments disclosed herein may be incorporated into other embodiments as will be apparent to those of skill in the art.

The scope of the invention is therefore not intended to be limited by the specific embodiments disclosed herein, but is intended to be defined by the full scope of the following claims.

What is claimed is:

1. A leaflet orientation device for determining the coaptive axis of a valve, comprising:

an elongate tubular body having a proximal end and a distal end; and

a conformable radiopaque target carried by the distal end of the tubular body;

wherein the radiopaque target is sized for advancement into the valve and is sufficiently conformable to reconfigure in response to opening and closing of the valve.

2. The leaflet orientation device of claim 1, wherein the radiopaque target is configured to align with coaptive edges of the valve leaflets.

3. The leaflet orientation device of claim 1, wherein the radiopaque target comprises a plurality of wires.

4. The leaflet orientation device of claim 1, wherein the radiopaque target comprises a collapsible basket.

5. The leaflet orientation device of claim 1, wherein the radiopaque target comprises a balloon.

6. The leaflet orientation device of claim 1, wherein the radiopaque target is axially movable with respect to the tubular body.

7. The leaflet orientation device of claim 6, wherein the radiopaque target is movable between a retracted position within the tubular body for transluminal advancement toward the valve and an extended position for determining the coaptive axis of the valve.

8. A device for assessing the functionality of a heart valve, comrprising:

an elongate tubular body having a proximal end and a distal end; and

a radiopaque target extending from the distal end of the tubular body, the target being conformable for conforming to the coaption axis of the valve and moveable in response to opening and closing of the valve;

wherein the radiopaque target is observable when the heart valve is closed for evaluating valve function.

9. The device of claim 8, wherein the radiopaque target is axially movable relative to the tubular body and is collapsible for containment within the tubular body for transluminal delivery to the heart valve.

10. The device of claim 8, wherein the radiopaque target is sized for use with a mitral valve.

11. The device of claim 8, wherein the radiopaque target comprises a plurality of wires.

12. The device of claim 8, further comprising a guidewire and wherein the tubular body includes a guidewire lumen for slidably receiving the guidewire.

13. The device of claim 8, further comprising a manifold coupled to the proximal end of the tubular body.

14. The device of claim 13, further comprising a control member disposed on the manifold and a control wire connecting the control member and the radiopaque target.

15. The device of claim 14, wherein the control member is moveable for advancing the radiopaque target relative to the tubular body.

* * * * *