Sept. 29, 1936. F. HARSCH 2,055,864

ATOMIZING NOZZLE

Filed Sept. 19, 1935

Fig. 1.

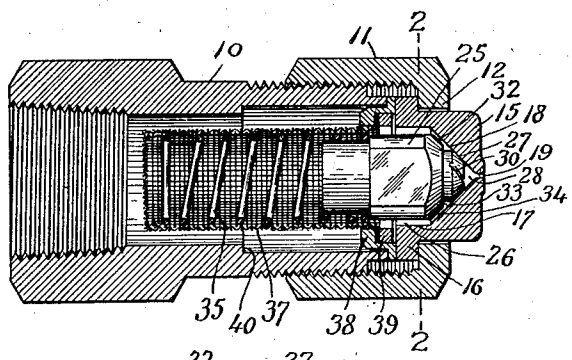

Fig. 2.

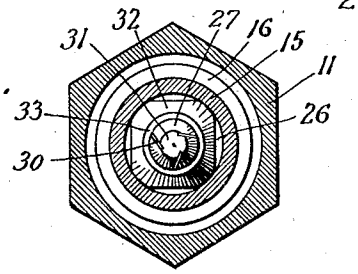

Fig. 3.

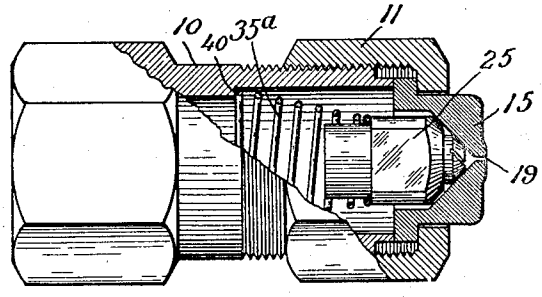

INVENTOR.
Frank Harsch
BY
Arthur L. Hunt
his ATTORNEY

Patented Sept. 29, 1936 2,055,864

UNITED STATES PATENT OFFICE

2,055,864

ATOMIZING NOZZLE

Frank Harsch, Maplewood, N. J.

Application September 19, 1935, Serial No. 41,216

6 Claims. (Cl. 299—120)

This invention relates to atomizing nozzles of the type in which liquid under pressure is caused to enter tangentially into a space from which the whirling liquid is discharged through an axial orifice. The invention has been made especially with the idea of providing an improved atomizer for oil burners, but atomizing nozzles according to the invention are adapted for atomizing water and other liquids.

The object of the invention is to provide an improved atomizing nozzle of the type referred to which shall be of relatively simple construction and relatively inexpensive to make, easy to clean, having improved means for straining the liquid to avoid clogging of the whirl-producing passages, and without screw threads on the two parts which cooperate to produce the spray, thus reducing the cost of the parts of the device which after long service may need to be renewed and avoiding mis-alignment due to mis-alignment in threading. To these ends, the invention consists in the features of construction and combination of parts hereinafter fully described and specifically pointed out in the claims.

A nozzle embodying the various features of the invention in the form now considered best and a modification thereof are shown by the accompanying drawing, in which:—

Fig. 1 is a longitudinal axial sectional view of a nozzle according to the invention with one of the parts shown in elevation;

Fig. 2 is a cross-sectional view taken on line 2—2 of Fig. 1; and

Fig. 3 is a view similar to Fig. 1 showing a nozzle like that of Fig. 1 except for the omission of the gauze strainer of Fig. 1 and the substitution of a different spring.

Referring to the drawings, and first to Figs. 1 and 2, the liquid straining and spray-producing parts of the nozzle are mounted within a housing formed by a hollow body 10 and a cap nut 11 which has a clamping flange 12 and a central opening at its outer end, the front end of the body 10 being exteriorly threaded to receive the cap nut 11 and the rear end being interiorly threaded to screw on to the end of the pipe or other part through which the oil or other liquid under pressure is supplied to the nozzle, this part being desirably formed with wrench faces as shown. A cup-shaped tip member 15 extends through the opening in the outer end of the cap nut 11 and has at its inner end a flange 16 which is engaged by the flange 12 of the cap nut, so that when the cap nut is screwed on the body 10 the tip 15 is drawn inward toward the end of the body 10 to be seated at the end of the body either directly thereon or, as shown in Fig. 1, on an intervening part hereinafter referred to. The bore or recess of the tip is cylindrical for a distance in from the open inner end or side of the tip as shown at 17 and is then tapered to provide a conical surface 18 extending to an axial discharge orifice 19 in the front wall of the tip.

Extending into the recess of the tip is a plug member 25 the body portion of which is formed to have a sliding fit in the cylindrical part 17 of the tip recess, being partly cylindrical and partly squared as best shown in Fig. 2 or otherwise cut away to provide flow passages 26 for the liquid. The forward end of the plug is of frusto-conical form, its conical surface 27 extending at the same angle as the conical face 18 of the tip recess so that when the plug is pressed into the recess its surface 27 will seat liquid-tight against the tip face 18, leaving a small chamber 28 between the end of the plug and the discharge orifice 19. A plurality of small grooves 30 are cut in the conical surface 27 all inclined in the same direction to extend tangentially of the end face 31 of the plug and therefore of the chamber 28.

The plug 25 has between its slidably fitting part and its conical surface 27 an annular surface 32 separated from the conical surface 27 by a channel-forming groove 33. This outer surface is coaxial with the surface 27 and is most desirably and as shown of substantial width and conically inclined at the same or approximately the same angle as the surface 27. It is slightly offset inwardly with respect to a continuation of the conical surface 27, so that when the plug is positioned in the recess with its surface 27 seated against the tip face 18 the conical surface 32 of the plug will be spaced slightly from that part of the tip face 27 which is opposite it to provide a restricted annular straining passage 34 narrow enough to prevent the passing of any particles of matter in the liquid which are too large to pass freely through the grooves 30 but which passage, because of its circumferential length, has a total cross-area so much greater than the aggregate cross-area of the grooves 30 that it does not appreciably reduce the pressure under which the liquid reaches the grooves 33.

The plug 25 is held in position pressed into the recess of the tip with its tangentially grooved conical surface 27 seated against the conical face 18 of the recess by a helical spring 35. The rear end of the plug is reduced to leave a shoulder 36 between it and the main body portion of the

plug, and the forward end of the spring extends about this reduced rear end and abuts against the shoulder. In the nozzle shown by Fig. 1, the spring has its rear end seated in the rear end of a cylindrical strainer 37 and serves the double purpose of pressing the plug into the tip cavity and of supporting the wall of the strainer against collapse.

The strainer 37 is conveniently formed of suitably fine mesh woven wire fabric as indicated by the drawing, the drawing, however, indicating for the sake of clearness a much coarser mesh fabric than is used. The strainer is of cylindrical form open at its forward end, and closed at its rear end, as by a piece of mesh having a flange which fits within the end of the cylinder and is soldered or otherwise secured in place. The forward end of the screen is connected to an inwardly and outwardly flanged ring 38 by which the strainer is secured in position within the body 10. As shown, the strainer has an outturned flange at its forward end which is clamped between the inwardly extending flange of the holding ring 38 and a frictionally held clamping ring 39. The outwardly extending flange of the holding ring 38 seats on the forward end of the body 10 and is clamped between the end of the body and the flange 16 of the tip 15 when the cap nut is screwed on the body to clamp these parts together. The cylindrical strainer and the spring 35 are of such relative size that the spring fits fairly closely within the strainer so as to hold the strainer against collapse under the pressure of the inflowing liquid even when the strainer has become very much clogged after long use.

When the device is in use, the oil or other liquid supplied under pressure to the interior of the body 10 passes through the strainer 37, thence through the passages 26 and through the straining passage 34 to the channel formed by the groove 33 from which the liquid, still under substantially its original pressure, flows through the tangential grooves 30 to the whirl chamber 28 from which it is discharged through the orifice 19. The liquid in the whirl chamber 28 because of its entering the chamber tangentially, has a whirling motion in the chamber, and because of this whirling motion and the pressure in the chamber, as the liquid leaves the discharge orifice 19 it is immediately atomized and advances from the orifice in the form of a cone.

As is customary with spray nozzles of the type referred to, the cross-area of the discharge orifice 19 is substantially less than the aggregate cross-area of the tangential grooves 30, so that while the flow capacity of the grooves is small enough to obtain a flow velocity of the streams of liquid issuing tangentially therefrom into the chamber 28 sufficient to cause a rapid whirling of the liquid in the chamber, their aggregate cross-area is enough greater than the cross-area of the discharge orifice so that the pressure of the liquid in the chamber will be sufficient to cause the desired forcible discharge of the liquid through the orifice. For example, for a discharge orifice of about .013 inch diameter the tangential grooves 30 may be about .008 inch wide by about .008 inch deep, and the width between the tip face 18 and the plug surface 32 of the annular straining passage may be about .003 inch.

It is sometimes desirable to dispense with the cylindrical strainer 37. In order that the nozzle may be used without this strainer, the bore of the body 10 is formed with a shoulder 40 and a conical spring 35a, the rear end of which seats on this shoulder, is provided, as shown in Fig. 3, to serve in place of the spring 35 of Fig. 1 for holding the plug 25 within the recess of the tip. The straining passage 34 will then serve to prevent the passing of particles which might obstruct the tangential grooves 30, and although this straining passage will then require to be cleaned more often than when the nozzle is provided with a strainer such as 37, it will still operate for long periods without cleaning unless the oil or other liquid passing through it is unusually dirty, or, in the case of an oil burner nozzle, there is a more rapid formation of carbon than usual.

The tip and plug should be made of a suitable hard heat-resistant and corrosion-resistant material, such as a suitable stainless steel, but the housing body and cap nut need not be of such special material. I have made these parts of brass, as is customary for the housings of nozzles of the kind referred to.

It will be seen that the only threaded parts of the new nozzle are the two housing members, and that the two parts, the tip and the plug, which are the only parts which may need to be renewed within the ordinary useful life of a nozzle of this kind, require no threading and are of such form as to be comparatively inexpensive to make. It will also be seen that the construction of the nozzle is such that it is very easy to turn the tangentially grooved surface of the plug against the seating face of the tip for the purpose of grinding off carbon formed on the seating face opposite the tangential flow-directing grooves.

What is claimed is:

1. A spray nozzle, comprising a housing including a body part having an externally threaded end and a cap nut on said end having a clamping flange and a central opening, a strainer within the housing having a cylindrical wall of fine wire mesh carried by a holding ring seated against the end of the housing body, a tip member seated against said holding ring, the holding ring and the tip member being clamped against the end of the housing body by the cap nut, the tip member having a central recess the walls of which extend first axially and then conically to an axial discharge orifice, a plug slidably fitting within the recess and having its forward end of frusto-conical shape to seat surface to surface against the conical surface of the tip recess and to provide a whirl chamber adjacent the discharge orifice and having a plurality of grooves in its conical seating surface for directing liquid tangentially into the whirl chamber, and a helical spring seated within the strainer and bearing against the plug to hold the plug seated within the tip recess.

2. A spray nozzle, comprising a housing, a tip member at the end of the housing having an axial discharge orifice and an interior conical surface extending from the orifice, and a plug member having a frusto-conical end seated surface to surface against the conical surface of the tip member and providing a whirl chamber adjacent the discharge orifice and having a plurality of grooves in its conical seating surface for directing liquid tangentially into the whirl chamber and having an annular surface separated from its conical seating surface by an annular channel-forming groove, said annular surface being spaced from the surface of the tip member to provide an annular straining passage the width of which is substantially less than any cross-dimension of said grooves.

3. A spray nozzle, comprising a housing, a tip member at the end of the housing having an axial discharge orifice and an interior conical surface extending from the orifice and an interior cylindrical surface rearward of the conical surface, and a plug member having a cylindrical body part to fit the cylindrical surface of the tip member and cut away to provide flow passages and having a frusto-conical end seated surface to surface against the conical surface of the tip member and providing a whirl chamber adjacent the discharge orifice and having a plurality of grooves in its conical seating surface for directing liquid tangentially into the whirl chamber and having between its cylindrical body part and its conical seating surface an annular surface separated from its conical seating surface by an annular channel-forming groove, said annular surface being spaced from the surface of the tip member to provide an annular straining passage the width of which is substantially less than any cross-dimension of said grooves.

4. A spray nozzle, comprising a housing including a body part having an externally threaded end and a cap nut on said end having a clamping flange and a central opening, a tip member held at the end of the housing body by the cap nut, said tip member having an axial discharge orifice and an annular surface about the orifice, a plug member having an annular surface to seat against said annular surface of the tip member and shaped to provide within said annular surfaces a circular chamber concentric with the discharge orifice, one of said annular surfaces having a plurality of grooves for directing liquid tangentially into said circular chamber, a strainer having a cylindrical wall of fine wire mesh within the housing carried by a holding ring clamped between the tip member and the end of the housing body, and a helical spring within the strainer fitting therein to support the cylindrical wall thereof and reacting between the strainer and the plug member to hold the plug member seated against said annular surface of the tip member.

5. A spray nozzle, comprising a housing, a tip member at the end of the housing having an axial discharge orifice, a slidably mounted plug member having its forward end shaped to form with the wall of the tip member a whirl chamber adjacent the discharge orifice and having an annular surface to seat against an annular surface of the tip member about the whirl chamber, one of said annular surfaces being grooved to provide passages for directing liquid tangenetially into the whirl chamber, a strainer having a cylindrical wall of fine wire mesh within the housing held against movement relatively to the tip member, and a helical spring within the strainer fitting therein to support the cylindrical wall thereof and serving to hold the plug member seated against the conical surface of the tip member.

6. A spray nozzle, comprising a housing, a tip member detachably mounted at the end of the housing having a central recess and an axial discharge orifice opening from the recess, a plug slidably fitting within the tip recess and having its forward end shaped to form with the wall of the tip recess a whirl chamber adjacent the discharge orifice and having an annular surface to seat against an annular surface of the tip recess about the whirl chamber, one of said annular surfaces being grooved to provide passages for directing liquid tangentially into the whirl chamber, the plug having also a part spaced outwardly from its said annular surface providing a surface in liquid straining relation with a part of the surface of the tip recess, said last mentioned surfaces being separated from the annular surfaces adjacent the whirl chamber by a channel-forming groove from which the liquid enters the grooves which direct the liquid tangentially and a spring mounted within the housing and serving to hold the plug seated in the tip recess.

FRANK HARSCH.