T. W. TRAVIS.

COMPOUND RAILROAD-RAILS.

No. 194,193. Patented Aug. 14, 1877.

Fig 1

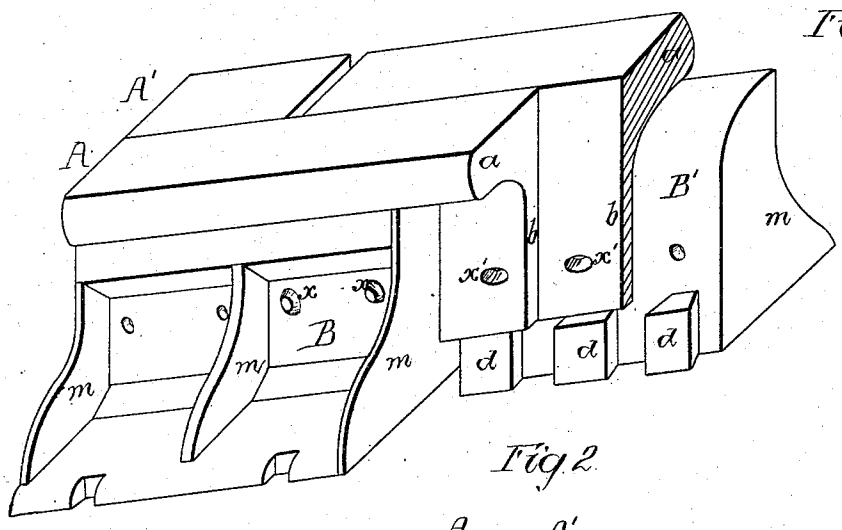

Fig 2

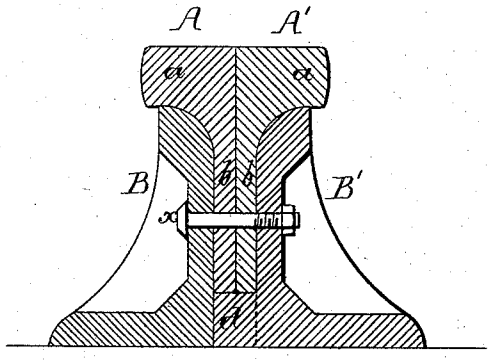

Fig 3

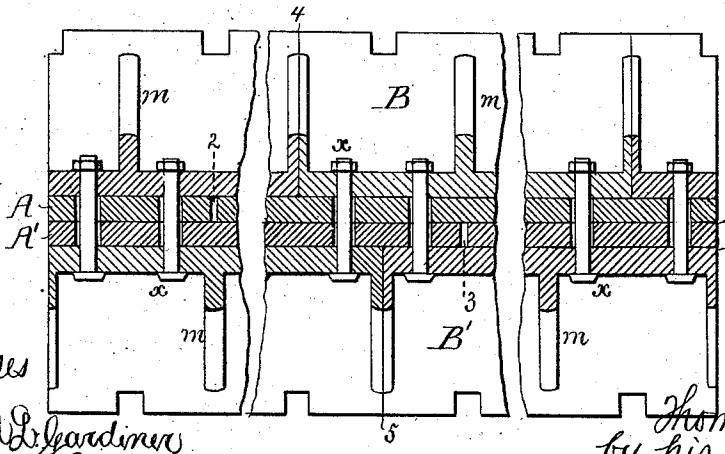

Witnesses
Richard L. Gardiner
Harry Smith

Inventor
Thomas W. Travis
by his Attorneys
Howson & Sons

N. PETERS, PHOTO-LITHOGRAPHER, WASHINGTON, D. C.

UNITED STATES PATENT OFFICE.

THOMAS W. TRAVIS, OF PHILADELPHIA, PENNSYLVANIA, ASSIGNOR OF ONE-HALF HIS RIGHT TO JOHN A. POLLOCK, OF SAME PLACE.

IMPROVEMENT IN COMPOUND RAILROAD-RAILS.

Specification forming part of Letters Patent No. **194,193**, dated August 14, 1877; application filed June 28, 1877.

To all whom it may concern:

Be it known that I, THOMAS W. TRAVIS, of Philadelphia, Pennsylvania, have invented a new and useful Improvement in Compound Rails, of which the following is a specification:

The object of my invention is to make a substantial compound railroad-rail with a continuous tread, by combining comparatively light and inexpensive steel bars with clamping-girders of cast-iron, in the manner described hereinafter.

In the accompanying drawing, Figure 1 is a perspective view of my improved compound rail; Fig. 2, a transverse section of the same, and Fig. 3 a sectional plan.

The rail is composed of four main parts—namely, the two angle-bars A A′, of steel or of a superior grade of wrought-iron, and the two clamping-girders B B′, of cast-iron. The horizontal flanges *a a* of the angle-bars constitute the tread, and the vertical flanges *b b* are confined by and between the girders.

I prefer to dovetail together the lower portions of the cast-iron girders, one girder having dovetailed projections *d d*, adapted to similarly-shaped recesses in the other girder, and on the projections bear the lower ends of the vertical webs *b b* of the angle-bars, the upper curved edges of the girders forming bearings for the under side of the flanges *a a*, where they join the said vertical flanges.

Each of the clamping-girders is, by preference, strengthened by ribs *m m*, and the girders and angle-bars are firmly secured together by suitable bolts *x x*.

The angle-bars and girders should be made of equal lengths; but, in putting them together, care should be taken that the ends of one angle-bar should occur at a point between the ends of an adjoining bar; thus the joint 2, Fig. 3, of the angle-bars A occurs at a distance from the joint 3 of the angle-bars A′; and the same rule should be observed as regards the girders, the joint 4 of girders B B occurring at a distance from the joint 5 of the girders B′, and the joints of the girders should occur at a distance from those of the angle-bars. In other words, there should be a general breaking or staggering of joints, both of the angle-bars as regards each other, and of the girders in respect to each other and to the joints of the angle-bars.

By this arrangement a continuous tread, uninterrupted by the objectionable gaps which extend entirely across ordinary rails at their joints, is produced, and the joints of the angle-bars are protected by the girders at points where the latter are the least liable to yield.

The openings *x′* in the stems *b* of the angle-bars A A′ are but slightly, if any, wider than the bolts which confine the various parts together; but these openings are considerably longer than they are wide, so that while independent vertical movement of the rails tending to produce uneven joints is prevented, longitudinal movement of the bars, demanded by expansion and contraction, is not interfered with.

While my improved rail has the advantage of a continuous tread, it is more substantial than an ordinary rail, owing to the rigidity imparted by the cast-iron girders. At the same time it is as cheap as, or cheaper than, a rail made entirely of steel, owing to the small amount of this metal which enters into the composition of the compound rail.

I claim as my invention—

1. A continuous compound rail composed of two sets of angle-bars, A A′, with staggered joints, and two sets of girders, B B′, all being combined substantially as set forth.

2. The combination of the angle bars with girders dovetailed together, as described.

In testimony whereof I have signed my name to this specification in the presence of two subscribing witnesses.

THOMAS W. TRAVIS.

Witnesses:

HERMANN MOESSNER,

HARRY SMITH.