C. E. REGO.

DEVICE FOR PREVENTING BLOWING OFF OF MANHOLE COVERS.

APPLICATION FILED MAR. 19, 1913.

1,071,577. Patented Aug. 26, 1913.

Fig. 1.

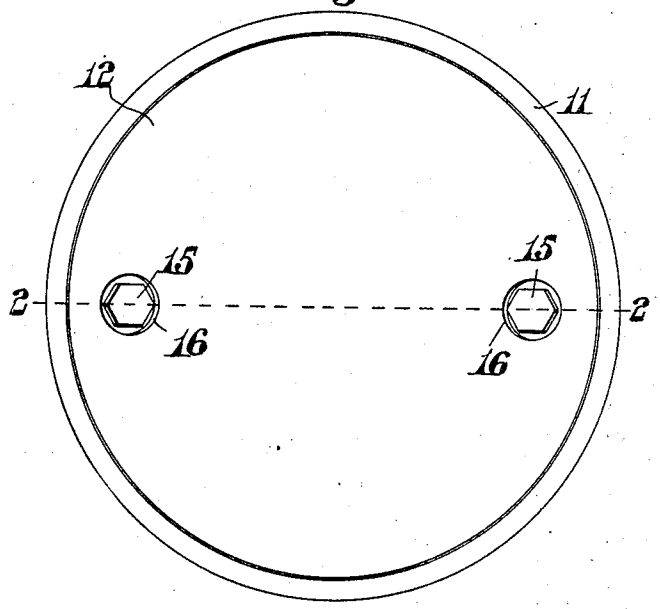


Fig. 2.

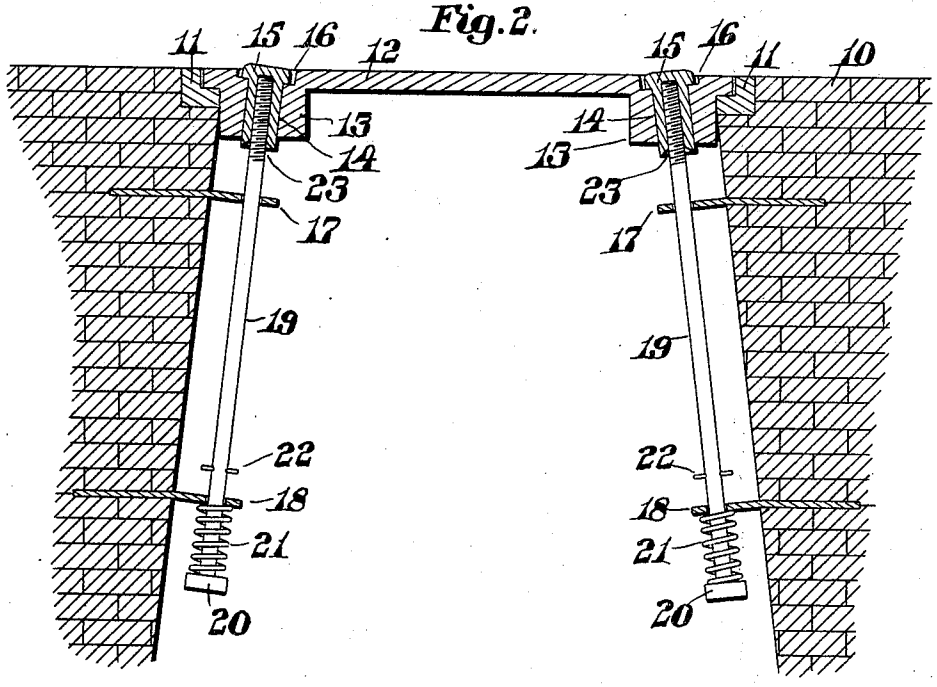


Witnesses:

A. C. Lombard

Mary C. Smith.

Inventor:

Charles E. Rego,

by Walter E. Lombard,

Atty.

# UNITED STATES PATENT OFFICE.

CHARLES E. REGO, OF BOSTON, MASSACHUSETTS.

## DEVICE FOR PREVENTING BLOWING OFF OF MANHOLE-COVERS.

1,071,577. Specification of Letters Patent. Patented Aug. 26, 1913.

Application filed March 19, 1913. Serial No. 755,543.

*To all whom it may concern:*

Be it known that I, CHARLES E. REGO, a citizen of the United States of America, and a resident of East Boston, in the county of Suffolk and State of Massachusetts, have invented certain new and useful Improvements in Devices for Preventing Blowing Off of Manhole-Covers, of which the following is a specification.

This invention relates to covers for manholes and particularly to manholes which are used in connection with underground electric lighting systems, the object of the invention being to prevent accident when gases accumulate within the manhole and the electric current becomes short-circuited and causes an explosion.

Ordinarily in a manhole as now constructed the cover is simply placed upon its seat and when an explosion occurs the cover is hurled high in the air and is liable to cause great damage and sometimes loss of life. To prevent this, provision is made whereby when such an explosion occurs the manhole cover is limited in its upward movement, means being employed to prevent it from being hurled into the air.

The invention consists in providing each manhole with a plurality of extensions projecting into the manhole through suitable guide members, and interposing between said guide members and the headed ends of these extensions yielding members such as springs so that when an explosion of the gases occurs in the manhole the cover may be lifted sufficiently to permit of the escape of the gases, said yielding members then returning the cover to its seat.

The invention further consists in certain novel features of construction and arrangement of parts which will be fully understood by reference to the description of the drawings and to the claims hereinafter given.

Of the drawings: Figure 1 represents a plan view of a manhole seat and its cover, and Fig. 2 represents a transverse section of the same, the cutting plane being on line 2—2 on Fig. 1.

Similar characters designate like parts throughout the drawings.

In the drawings, 10 represents the wall of a manhole of any wellknown construction having at its upper end the annular seat 11 on which is normally positioned a cover 12. This cover 12 is provided with a plurality of downward extensions or lugs 13 having openings 14 therethrough in each of which is positioned a nut 15. These nuts 15 are provided with heads which are positioned in depressions 16 in the upper face of the cover 12. Secured to the wall of the manhole in any wellknown manner are the guide members 17 and 18 through which extend the reciprocating rods 19, the upper end of each of which is threaded to a nut 15. The lower end of each rod 19 is provided with a head 20 between which and the guide member 18 is interposed a helical spring 21 surrounding said rod. Each rod 19 is provided with a pin or shoulder 22 limiting the downward movement of said rod in the guide members 17 and 18 when said rods are disengaged from their nuts 15. Each of the nuts 15 is provided with a flaring mouth 23 the object of which is to assist in directing the upper ends of the rods 19 into the center of the nuts 15 when the manhole cover is replaced after removal.

When it is desired to secure access to the manhole the nut 15 may be removed from the outside permitting the rods 19 to drop in their guides 17 and 18 until the pin or shoulder 22 comes into contact with the upper face of the guide member 18. When it is desired to replace the cover said cover is positioned with the nuts 15 substantially in alinement with the rods 19. As the cover is returned to its seat 11 the upper ends of the rods 19 will enter the flaring mouth 23 of the nuts and be brought into alinement therewith. The nuts are then turned upon the threads of the rods, thereby slightly compressing the springs 21. While the parts are in this position, should gases accumulate in the manhole and be exploded by the short-circuiting of the electric current, the cover 12 would be raised sufficiently against the tension of the springs 21 to permit of the escape of the gases, after which said springs 21 would return said cover to its normal closed position.

It is believed that the operation and many advantages of the invention will be fully understood from the foregoing description.

Having thus described my invention, I claim:

1. In a device of the class described, the combination of a manhole cover; yielding means within the manhole normally secured to said cover permitting limited movement to said cover from the manhole open-

ing when an explosion of gas occurs, and means whereby said yielding means may be disconnected from said cover when the removal of the cover is desired.

2. In a device of the class described, the combination of a manhole cover having a plurality of openings therethrough; a nut extending through each opening; a rod threaded to each nut and provided with a head at its lower end; a guide for said rod; and a spring surrounding each rod between said guide and said head.

3. In a device of the class described, the combination of a manhole cover having a plurality of openings therethrough; a nut extending through each opening provided with a flaring mouth; a rod threaded to each nut and provided with a head at its lower end; a guide for said rod; and a spring surrounding each rod between said guide and said head.

4. In a device of the class described, the combination of a manhole cover having a plurality of openings therethrough and a depression in its upper face in alinement with each opening; a headed nut positioned in each opening and its corresponding depression; a rod threaded to each nut and having a shoulder thereon; a guide for each rod; and a spring interposed between said shoulder and guide normally retaining said cover to its seat but permitting limited upward movement thereof.

5. In a device of the class described, the combination of a cover having a plurality of openings therethrough and a depression in its upper face in alinement with each opening; a headed nut positioned in each opening and its corresponding depression; a rod threaded to each nut and having a shoulder thereon; a guide for each rod; a spring interposed between said shoulder and guide normally retaining said cover to its seat but permitting limited upward movement thereof; and means for limiting the downward movement of said rods when disengaged from said nuts.

Signed by me at 4 Post Office Sq., Boston, Mass., this 14th day of March, 1913.

CHARLES E. REGO.

Witnesses:
WALTER E. LOMBARD,
NATHAN C. LOMBARD.

Copies of this patent may be obtained for five cents each, by addressing the "Commissioner of Patents, Washington, D. C."