AUSTRALIA
Patents Act 1990

63295/86

PATENT REQUEST: STANDARD PATENT AND NOTICE OF ENTITLEMENT

I/We, being the person(s) identified below as the Applicant, request the grant of a patent to the person(s) identified below as the Nominated Person, for an invention described in the accompanying standard complete specification.

Full application details follow.

Applicant and Nominated Person:

ROCKWELL INTERNATIONAL CORPORATION
625 LIBERTY AVENUE
PITTSBURGH
PENNSYLVANIA 15222-3123
U.S.A.

Invention Title:

KEYLESS PRINTING SYSTEM FOR KEYLESS LITHOGRAPHIC PRINTING.

Name(s) of actual inventor(s):
Lawrence J. BAIN; Thomas A. FADNER

Address for service in Australia: GRIFFITH HACK & CO.
601 St. Kilda Road, Melbourne, Vic. Australia 3004.
Attorney Code: HA

BASIC CONVENTION APPLICATION(S) DETAILS

Application Number	Country	Country Code	Date of Application
576549	US		31st August 1990

Drawing number recommended to accompany the abstract: 1

M 028 [illegible] 0791

....2

I,

ROCKWELL INTERNATIONAL CORPORATION

of

625 LIBERTY AVENUE
PITTSBURGH
PENNSYLVANIA 15222-3123
U.S.A.

being the applicant in respect of this Application state the following:-

The person(s) nominated for the grant of the patent:

The nominated person is the assignee of the said inventors.

The person(s) nominated for the grant of the patent:

The nominated person is the assignee of the basic applicants.

The basic application(s) listed above is/are the first application(s) made in a Convention country in respect of the invention.

ROCKWELL INTERNATIONAL CORPORATION

30th July 1991

GRIFFITH HACK & CO

Patent Attorneys for and
on behalf of the applicant.

AU9181455

(12) PATENT ABRIDGMENT (11) Document No. AU-B-81455/91
(19) AUSTRALIAN PATENT OFFICE (10) Acceptance No. 632956

(54) Title
KEYLESS PRINTING SYSTEM FOR KEYLESS LITHOGRAPHIC PRINTING

International Patent Classification(s)
(51)[5] B41F 031/14

(21) Application No. : 81455/91 (22) Application Date : 30.07.91

(30) Priority Data

(31) Number	(32) Date	(33) Country
576549	31.08.90	US UNITED STATES OF AMERICA

(43) Publication Date : 05.03.92

(44) Publication Date of Accepted Application : 14.01.93

(71) Applicant(s)
ROCKWELL INTERNATIONAL CORPORATION

(72) Inventor(s)
LAWRENCE J. BAIN; THOMAS A. FADNER

(74) Attorney or Agent
GRIFFITH HACK & CO , GPO Box 1285K, MELBOURNE VIC 3001

(56) Prior Art Documents
US 4864925
US 4690055
US 2447872

(57) Claim

1. In a keyless lithographic printing press having blanket cylinder and plate cylinder with printing plate mounted thereon, an improved keyless printing system, comprising:

means for supplying dampening water to the plate cylinder;

at least one form roller in rotational contact with the plate cylinder;

inking drum in rotational contact with said form roller;

at least first and second transfer rollers in rotational contact with said inking drum;

metering roller having at least an oleophilic and hydrophobic surface which is capable of retaining a quantity of printing fluid, said metering roller in

.../2

rotational contact with said first and second transfer rollers; and

means for supplying printing fluid to said metering roller.

AUSTRALIA

Patents Act 1990

632956

ORIGINAL

COMPLETE SPECIFICATION

STANDARD PATENT

Invention Title:

KEYLESS PRINTING SYSTEM FOR KEYLESS LITHOGRAPHIC PRINTING.

The following statement is a full description of this invention, including the best method of performing it known to me:-

BACKGROUND OF THE INVENTION

The present invention relates to printing systems for use in keyless lithographic printing processes.

In the field of high speed lithographic printing, ink is continuously conveyed from an ink source by means of a series of rollers to a planographic printing plate on a plate cylinder in a lithographic printing press. Image portions of the printing plate accept ink from one or more of the last of a series of inking rollers and transfer a portion of that ink to a blanket cylinder as a reverse image from which a portion of the ink is transferred to form a correct-reading image on paper or other materials. It is also essential in conventional lithographic printing processes that a dampening solution containing water and proprietary additives be conveyed continuously to the printing plate whereby transferring in part to the non-image areas of the printing plate the water functions to keep those non-image areas free of ink. Hereinafter, the terms "water" and "dampening solution" refer to water plus additives or to other aqueous solutions used in the operation of lithographic printing presses.

In conventional printing press systems, the ink is continuously made available in varying amounts determined by cross-press column input control adjustments to all parts of the printing plate, including both image and

non-image areas. In the absence of the dampening solution, the printing plate will accept ink in both the image and non-image areas of its surface.

Lithographic printing plate surfaces in the absence of imaging materials have minute interstices and a hydrophilic or water-loving property to enhance retention of water, that is the dampening solution, rather than ink on the surface of the plate. Imaging the plate creates oleophilic or ink-loving areas according to the image that is to be printed. Consequently, when both ink and dampening solution are presented to an imaged plate in appropriate amounts, only the ink tending to reside in non-image areas becomes disbonded from the plate. In general, this action accounts for the continuous ink and dampening solution differentiation on the printing plate surface, which is essential and integral to the lithographic printing process.

Controlling the correct amount of dampening solution supplied during lithographic printing has been an industry-wide problem ever since the advent of lithography. It requires continual operator attention since each column adjustment of ink input may require a change in dampener input. Balancing the ink input that varies for each column across the width of the press with a uniform dampening solution input across the width of the press is at best a compromise. Consequently,

depending upon which portion of the image the operator has adopted as his standard of print quality at any given time during the printing run, the operator may need to adjust the ink input at correspondingly-located cross-press positions. As a result, the dampening solution to ink ratio at that position may become changed from a desired value. Conversely, the operator may adjust a dampener input for best ink and dampening solution balance at one inking column, which may adversely affect the ink and dampening solution balance at one or more other cross-press locations. Adjustments such as these tend to occur repeatedly throughout the whole press run, resulting in slight to significant differences in the quality of the printed image throughout the run. In carrying out these adjustment operations, the resulting images may or may not be commercially acceptable, leading to waste in manpower, materials, and printing machine time.

Certain commercially successful newspaper printing configurations rely on the inking train rollers to carry dampening solution directly to the printing plate. Notable among these are the Goss Metro, Goss Metroliner, and the Goss Headliner Offset printing presses which are manufactured by the Graphic Systems Division of Rockwell International Corporation. In these alternative configurations, the dampening solution is combined with

the ink on an inking oscillator drum such that both ink and water are subsequently and continuously transferred to the inking form rollers for deposition onto the printing plate. In another variation, the dampening solution is applied in a conventional manner directly to the printing plate by means of separate dampening rollers and a dampening solution supply system. In systems of either type, regardless of the method whereby the dampening solution is introduced, it is well known that some of the dampening solution becomes mixed with the ink and returns to the inking train of rollers and may ultimately be introduced into the ink supply system itself. In any case, these conventional lithographic systems require considerable operator attention to maintain ink and dampening solution balance and tend to produce more product waste than desired.

Prior art devices and methods for correcting this inherent fault in conventional lithography utilize keyless inkers. Certain of these methods also involve eliminating the dampening system or eliminating operator control of the dampening system.

Keyless inking systems have been disclosed that purport to eliminate operator attention to column control of inking by elimination of adjustable inking keys, thereby avoiding much of the aforementioned disadvantages of conventional lithography. For keyless inking systems

an ink metering method is required that continues to function despite the presence of up to about 40% dampening solution in the ink without allowing any temporarily-free dampening solution to interfere with the ink-metering function. Also, the unused or non-uniform portion of the ink film that is being continuously presented to the printing plate must be continuously scraped-off the return side of the inking system to enable continuous presentation of a uniform ink film to the plate by the supply side of the inking system. This scraped-off film is not uniform across the width of the press in ink and dampening solution composition. Since it would not be economically feasible to continuously discard the ink in the unused portion of the ink and dampening solution mixture, this mixture must either be renewed by selectively removing dampening solution from the mixture and returning the ink portion to the inking system or by thoroughly intermixing the unused ink and dampening solution mixture with fresh replenishment ink and returning such mixture to the inking system. U.S. Patent 4,690,055 discloses a keyless inking system in which dampening solution removal is unnecessary and which accommodates the dampening solution that is naturally acquired in the unused ink during the practice of lithography and for which, therefore, removal of dampening solution is not required.

In the keyless inking system disclosed in U.S. Patent No. 4,690,055 (hereby incorporated by reference), the location of the dampening system is not critical and can be positioned either to supply dampening solution directly to the plate cylinder or at some other location such as at an oscillator drum to which ink is also being supplied. An ink circulating and mixing system receives new or replenishment ink, as well as the ink and dampening solution combination that is continuously returned from a doctor blade which scrapes excess printing fluid from a rotating metering roller. Such ink and dampening combinations are generally herein referred to as printing fluids. The printing fluid circulating and mixing system functions to assure an inherently uniform cross-press input of printing fluid that remains consistent throughout and consists of a printing fluid pan roller, pump and appropriate conduits, a printing fluid pan level controlling system, and a printing fluid reservoir of such volume and design that it assures the printing fluid being fed to the metering roller is uniform in composition at any given instant of time despite the existence of the continual cross-press dampening solution to ink ratio differences of the unused or scraped return printing fluid previously referred to. The printing fluid circulation system is designed to continuously collect and distribute the printing fluid

from a reservoir through a plenum or series of orifices to uniformly redistribute the printing fluid across the press width to provide uniform composition of the printing fluid that is being introduced to the metering roller. The metering roller can be one of the types shown and described in U.S. Patent Numbers 4,882,990, 4,537,127, 4,862,799, 4,567,827, or 4,601,242, (all of which are hereby incorporated by reference) or any wear resistant oleophilic and hydrophobic metering roller as substantially therein defined.

Although the system disclosed in U.S. Patent 4,690,055 provides great improvements in lithographic printing presses, the technology requires a rather large and cumbersome ink pan arrangement that is more-or-less open to the press room environment. It requires that the pan be disposed beneath the metering roller/doctor blade confluence so that scraped off excess and return printing fluid film will fall readily into the pan arrangement. Pan roller or metering roller replacement is inconvenient and time consuming because of the large pan size and its peripheral attachments. Additionally, the pan roller requires a separate motor to drive it nominally at a speed slower than the press speed metering roller. Due to the more-or-less open nature of the pan system, the pan roller which dips into the pool of printing fluid cannot be driven at press speeds because printing fluid

would be propelled from its surface in many directions, including outside of the pan regions into the pressroom. Also, the slow rotational movement of the pan roller causes undue and severe wear on the metering roller surface when the two are in indented relationship. Consequently, the pan roller/metering roller confluence must be a gap. Control of that gap to avoid metering roller wear and yet simultaneously assure complete filling of the metering roller cells is difficult to engineer and to control over long periods of running time. For instance, depending upon flow properties of the ink being used, the cells may or may not become completely filled when non-forcing conditions such as a gap between the pan roller and the celled roller are used or when ink input systems not using pan rollers are employed.

Depending upon the particular metering roller technology being employed, the slow-moving pan roller running in contact with the rapidly turning metering roller that is rotating at press speed, may rapidly wear away the hard but abradable oleophilic and hydrophobic metering roller surface, thereby negating that element's necessary contribution to successful keyless lithographic inking operation. Under severely worn conditions, the metering roller may become hydrophilic which allows the

dampening water to interfere with uniform and efficient metering of ink into the system or it may lose its capacity to retain ink by loss of the celled surface morphology. Accordingly, there exists a need for a lithographic keyless inking or printing fluid system that embraces all the required operational features disclosed by U.S. Patent 4,690,055 but which overcomes the perceived negative features, namely large pan reservoir size with the attendant large ink volume requirement associated with use of the pan roller and reservoir, and those associated with potentially rapid wear of metering rollers or inefficient filling of metering roller cells because of the gap with the pan roller. Obviously, these may restrict the range of metering roller technologies which can be advantageously employed.

The present invention overcomes the aforementioned problems, difficulties and inconveniences, yet retains all of the principles essential to keyless lithographic systems as disclosed in U.S. Patent 4,690,055. Accordingly, in this improvement the pan and pan roller are eliminated and at least two transfer rollers are employed between the metering roller and an inking drum in the inking train of rollers.

SUMMARY OF THE INVENTION

An object of the present invention is to provide an improved keyless lithographic printing system having more transfer rollers in the inking train than are required in prior art keyless lithographic printing systems.

It is another object to increase the useful lifetime of the metering roller by providing press speed ink transfer rollers in place of prior art slow moving pan rollers.

It is a further object of the present invention to provide a pair of transfer rollers operating on the metering roller for effecting printing having greater uniformity of optical density than is achieved in prior art keyless lithographic printing systems.

It is another object of the present invention to provide an improved keyless lithographic printing system which eliminates the pan roller of the inker disclosed in U. S. Patent 4,690,055, yet closely approximates the advantageous attributes of this prior art pan roller inker system.

It is another object of the present invention to provide simplified and structurally smaller ink input and circulation system components which function to assure that the process-generated, natural water content of the ink is maintained in a homogenized condition, thereby avoiding buildup of free water anywhere in the inking

system.

Another principle object of the present invention is to provide an improved keyless lithographic system having greater latitude in the selection of useful metering roller technologies.

The objects are achieved by an improved keyless printing system for use in a keyless lithographic printing press of the type having a blanket cylinder and a plate cylinder with printing plate mounted thereon. The improved keyless printing system comprises: a means for supplying dampening water to the plate cylinder; at least one form roller in rotational contact with the plate cylinder; inking drum in rotational contact with the form roller; at least first and second transfer rollers in rotational contact with the inking drum; metering roller having at least an oleophilic and hydrophobic surface which together with a coacting ink doctoring blade retains a quantity of printing fluid for transfer by means of rotational contact with the first and second transfer rollers; and means for supplying printing fluid to the metering roller. In a preferred embodiment the first and second transfer rollers are frictionally driven by at least the metering roller and have a surface velocity substantially the same as the surface velocity of the metering roller.

BRIEF DESCRIPTION OF THE DRAWINGS

The features of the present invention which are believed to be novel, are set forth with particularity in the appended claims. The invention, together with further objects and advantages, may best be understood by reference to the following description taken in conjunction with the accompanying drawings, in the several Figures in which like reference numerals identify like elements, and in which:

FIG. 1 is a schematic side view of a keyless lithographic printing press system in accordance with the present invention;

FIGS. 2 and 3 are plan and elevation views, respectively, of the printing fluid input apparatus of the present invention and of a metering roller;

FIG. 4 is an end view of the printing fluid input apparatus and the metering roller;

FIG. 5 is a partial plan view of the printing fluid input apparatus;

FIG. 6 is an end view of the metering roller and the printing fluid input apparatus in an open servicing position;

FIGS. 7, 8 and 9 are a plan view, an elevation view and a side view of a gage assembly used in the present invention;

FIGS. 10 and 11 are a plan view and an elevation view of a seal cap assembly used in the present invention;

FIGS. 12 and 13 are schematic representations of pressurized printing fluid circulation systems used with the present invention;

FIGS. 14-17 are schematic side views of embodiments of the present invention having a doctor blade and return ink catch pan (FIG. 14), an injector or extruder ink input element (FIG. 15), an ink input shoe or rail element (FIG. 16) and a doctor blade and return ink catch pan with single form roller (FIG. 17);

FIG. 18a is a schematic side view of a prior art system according to U.S. Patent 4,690,055;

FIG. 18b illustrates an experimental configuration similar to the previously cited '055 patent but with the pan roller moved just out of indented relation with the metering roller.

FIGS. 18c and 18d are schematic side views of experimental confirgurations having added rider rollers;

FIG. 18e is a schematic side view of the preferred embodiment of the present invention having two transfer rollers;

FIG. 19 is a table of experimental results of printability comparing the configurations of FIGS. 18a through 18e and

FIG. 20 is target plate format used in testing the configuration of FIGS. 18a through 18e.

DESCRIPTION OF THE PREFERRED EMBODIMENT

A keyless inking system incorporating the present invention is depicted in FIG. 1 in which a blanket cylinder 10 prints on a web traveling as indicated by the directional arrow 12. Referring first to the dampening and inking systems associated with blanket cylinder 10, a plate cylinder 15 is contacted by two ink form rollers 16 which are in turn contacted by a metering roller 20 via drum 11, such as a copper drum, and two transfer rollers 13. The ink metering roller 20 is preferably of the type disclosed in U.S. Patent Numbers 4,862,799, 4,882,990, 4,537,127, 4,567,827 or 4,601,242 which were cited previously. In the dampening arrangement associated with plate cylinder 15 there typically is provided a rubber dampener form roller 19 and an oscillating transfer roller 22, which may be copper covered or chrome covered. The water is contained in a pan tray 23 and a pan roller 24 is used to pick up water from the pan 23 to bring it into contact with, for instance, a spiral brush roller 25 that is rotating at a speed which is different relative to the speed of rotation of pan roller 24. It should be recognized that virtually any known dampening system can be used with the present invention.

With this or other arrangements dampening solution is transferred onto the transfer roller 22 and from there

to the dampener form roller 19. The form roller 19 is typically positioned in a water-first sequence so that, during each revolution of the press subsequent to transferring ink to the blanket cylinder 10, plates are first subjected to dampening solution from the dampener form roller 19 before renewed printing fluid is applied to the imaged surface of the plates by means of the rubber covered ink form rollers 16.

A significant part of the present invention is the inking system that is used to supply printing fluid to the plate and blanket cylinders 15, 10. This system, makes it possible to supply a uniform mixture of ink and naturally occurring dampening solution to the plate cylinder 15 and thereby maintain the high print quality characteristic of conventional lithography. In this arrangement the printing fluid input and circulation system is identified generally by the numeral 30 and is used to deliver ink containing dampening solution, also referred to as the printing fluid, to the metering roller 20. Dampening solution in this system is not deliberately added to the ink but rather results naturally from ink coming in contact with dampening solution on the printing plate cylinder 15 and which, by means of the unused or return portion of printing fluid that passes or transfers back down through the various rollers, in part eventually enters the printing fluid input system 30.

The printing fluid input apparatus of the system 30 of the present invention is depicted in an open servicing position relative to the metering roller 20 in FIGS. 2 and 3. An end view of the apparatus engaged with the metering roller 20 in a closed operating position is depicted in FIG. 4. The metering roller 20 has first and second ends 32 and 34 which rotate in frames 36 and 38, respectively. The metering roller 20 has a surface 40 intermediate the first and second ends 32 and 34, the surface 40 capable of retaining a quantity of printing fluid. A housing 42 has an open first side 46 which mates with at least a portion of the surface 40 of the metering roller 20. When the housing 42 is in the closed operating position a chamber 44 is formed which contains the printing fluid under a predetermined pressure.

At least first and second end seal assemblies 48 and 50 are mounted on first and second opposed ends 52 and 54, respectively, of the housing 42. Each of the first and second end seal assemblies 48 and 50 have at least a first surface 56 for mating with first and second end sections 58 and 60, respectively, of the metering roller 20.

Referring now also to FIGS. 4 and 5 a reverse angle doctor blade 62 is attached to a second side 64 of the housing 42 and has an edge 66 for contacting the surface 40 of the metering roller 20 and for removing excess

printing fluid adhering to the surface 40 as the metering roller 20 rotates past the printing fluid filled chamber 44. A sealing member 68 is attached to a third side 70 of the housing 42 and has a surface area 72 for substantially sealing the chamber 44, at least the surface area 72 of the sealing member 68 being adjacent the surface 40 of the metering roller 20 such that an edge 74 of the sealing member 68 extends into the chamber 44. In a preferred embodiment the sealing member 68 is substantially longer and more flexible than the reverse angle doctor blade 62.

Since the printing fluid in the chamber 44 is under pressure it is a feature of the present invention that the reverse angle doctor blade 62 is held against the surface 40 of the metering roller 20 at least in part by this pressurized printing fluid in the chamber 44.

It is well known in the art of printing presses to provide devices which cause selected rollers or cylinders to oscillate (for example the roller oscillation drive disclosed in Goss Metroliner Parts Catalog No. 280-PC, Figure 280-56). Referring again to Figure 1, in the present invention such a means for oscillating 76 can be attached to the metering roller 20, thus providing oscillation to the metering roller 20, while the housing 42 of the printing fluid input apparatus 30 remains stationary. The metering roller 20 is of the type having an oleophilic and hydrophobic

surface.

Depending upon the applicacion it may or may not be necessary to provide oscillation to the metering roller 20. However, it is a novel feature of the present invention that in those applications where it is desirable to provide oscillation to the metering roller 20 it is feasible to accomplish this with the printing fluid input apparatus of the present invention.

The sealing member 68 may, for instance, be formed of steel or plastic and have a width in the range of approximately 1 to 2 inches and a thickness in the range of approximately 0.004 to 0.01 inch selected as a function of the open first side dimension of the housing 42 and of the diameter of the metering roller 20 which mates with the open first side, such that the sealing member 68 properly seals the chamber 44. The reverse angle doctor blade 62 may be formed of steel or plastic and in general have a width of approximately 1 inch and a thickness in the range of approximately 0.004 to 0.01 inch, if steel, and 0.04 to 0.06 inch, if plastic.

As shown in FIG. 6 the housing 42 is attached to a support 80 which is pivotable about axis 82 and thus provides an open servicing position and a closed operating position. The housing 42, as well as metering roller 20, are shown in the open servicing position in FIGS. 2 and 3, FIG. 2 being a plan view and FIG. 3 being

an elevation view.

The printing fluid input apparatus further includes at least one inlet means 102 in the housing 42 for inputting printing fluid into the chamber 44 and at least one outlet means 104 in the housing 42 for outputting printing fluid from the chamber 44. Since the chamber 44 is sealed by the metering roller 20, the first and second end assemblies 48 and 50, the reverse angle doctor blade 62 and the sealing member 68, it is thus possible to keep the printing fluid under a predetermined pressure. In the preferred embodiment, as will be discussed below, a circulating system is used to pump the printing fluid through the housing 42. It is an important feature of the present invention that, since the printing fluid is under pressure, the printing fluid circulation system is totally independent of the force of gravity as opposed to prior art systems that rely on the printing fluid falling into a reservoir or catch pan. Therefore, the housing 42 can be located anywhere around the circumference the metering roller 20. This has significant and important advantages in the art of keyless lithographic printing press design. It allows for printing couples of a press to be inverted thereby shorting the length of the paper path between the couples, as well as, providing savings in space and materials of construction. This freedom to locate the

housing 42 anywhere around the circumference of the metering roller 20 provides a degree of freedom in design of the printing press not found in prior art keyless printing presses.

Furthermore, the housing 42 can be designed to extend the full axial length of the surface 40 of the metering roller 20 or to extend only over a portion of the surface 40. For example, a number of housings, each less than full press width, can be located on one metering roller. Also, the housing 42 can be structured to wrap around the circumference of the metering roller 20 to greater or lesser extents depending upon the criteria of the press being design.

Referring now to FIGS. 10 and 11, each of the end seal assemblies 48 and 50 shown in FIGS. 2 and 3 has a seal 90 which is supported by a seal cap 92. As can be seen in FIG. 5 the seal cap 92 is attached to an end of the housing 42, more specifically a seal cap assembly is attached to each end of the housing 42.

Furthermore, the present invention can include a gage assembly 94, as shown in FIGS. 7, 8 and 9, which engages the housing 42 with a locating pin 96 when the housing 42 is pivoted into the closed operating position for accurate positioning of the housing 42 relative to the metering roller 20, see FIG. 6. The gage assemblies 94 are located adjacent the first and second end sections

32 and 34 of the metering roller 20. The gage assembly 94 has first and second sections 81, 83 which surround the ends 32, 34 of the metering roller 20.

In general a means 100 for pressurizing with the printing fluid the chamber 44 in the housing 42 is connected to the housing 42 via the inlet means 102 and the outlet means 104 on the housing 42.

As shown in FIG. 12, the means 100 for pressurizing is a circulating system having a pump 106 with an output 108 and an input 110. The output 108 of the pump 106 is connected to a pressure regulating check valve 111 and to the inlet means 102 of the housing 42. The input 110 of the pump 106 is connected to an printing fluid reservoir 112 which is also connected to the outlet means 104 of the housing 42. As shown in FIG. 12 the pressure regulating check valve 111 is also connected to the printing fluid reservoir 112. In the preferred embodiment the pump 106 is driven by a constant speed drive motor 114 which is connected to press/unit controls 116 of the printing press. The press/unit controls 116 may also receive signals from a sensor 118 mounted in the housing 42 for sensing the pressure of the printing fluid in the chamber 44 of the housing 42. In one embodiment a pressure of 4-6 psi is maintained in the chamber 44 to enable smooth consistent printing fluid input to metering roller 20. The pressure regulating check valve 111

functions to set the pressure of 4-6 psi in the chamber 44 and allows a portion of the printing fluid to flow back into the printing fluid reservoir 112, as necessary.

FIG. 13 depicts an alternative means 100 for pressurizing the chamber 44 wherein the pump 106 is driven by a motor 120 which is operated at a speed proportional to the speed of the printing press via variable speed drive 122. In this embodiment the output 108 of the pump 106 is connected to the inlet means 102 of the housing 42 and the outlet means 104 of the housing 42 is connected to the printing fluid reservoir 112. The input 106 of the pump is also connected to the printing fluid reservoir 112. Various means can be used to add fresh replacement ink to the printing fluid reservoir 112 in either the FIG. 12 or FIG. 13 embodiments as needed. For example, the means can include solenoid valve 124 which is connected to a press/unit controller 126, the press/unit controller 126 receiving a signal from a printing fluid level sensor 128 connected to the printing fluid reservoir 112. It is a novel feature of the present invention that the printing fluid reservoir 112 can be located at any position relative to the chamber 44, higher or lower than the chamber 44, since the printing fluid flow is regulated by internal pressure rather than by the force of gravity.

In addition the present invention can include a means for controlling the temperature of the printing fluid in the chamber 44 of the housing 42. For example, the means for controlling the temperature can be connected directly to the housing 42 or can be connected to the printing fluid reservoir 112. The means for controlling the temperature can utilize resistance element strip heaters affixed to the housing 42 (for example, a Chromalox No. SL0515 flexible resistive element heater). For the printing fluid reservoir 112 an immersion heater such as Chromalox No. ARMTO-2155T2 can be used.

The present invention overcomes a number of problems, difficulties and restrictions in prior art keyless lithographic printing systems. For instance, the pan and pan roller of the cited prior art (U. S. Patent No. 4,690,055) are replaced by a smaller and less complicated housing that together with the metering roller surface form a completely enclosed housing.

The inks selected for use in the present invention preferably have low values of viscosity at low rates of shear so that the printing fluid flows readily as compared to conventional lithographic inks. An ink having this property readily flows into and, subsequent to doctor blade metering as herein practiced, out of the cells or interslices in the surface of the rapidly

rotating metering roller 20 as it moves past the pressurized slowly circulating printing fluid in chamber 44.

An important feature when using a low viscosity printing fluid with the present invention is that the ink can be formulated to have good printing fluid transfer properties in the inking train of rollers and yet have any of a wide range of viscosity values at low shear rates, the formulation being dependent upon the configuration of the various rollers and cylinders used in a particular printing press. This capability is not possible with prior art pan roller printing fluid input systems as the amount of fluid input to the metering roller is dependent upon the pan roller force and not on the printing fluid's mobility. This capability is also not possible without the use of oleophilic and hydrophobic metering rollers since water is more readily forced out of low viscosity printing fluids and in the absence of the hydrophobic property will debond the fluid from the metering roller, thereby negating control of ink input.

In FIGS. 14 through 16, the paper web 12, blanket cylinder 10, plate cylinder 15, form rollers 16, dampening system 14 and oleophilic inking drum 11 are all configured substantially parallel axially and are more-or-less standard elements in the practice of lithographic

printing. Normally, and as conventionally practiced, only one transfer roller 13 is required to convey the ink metered by the coacting metering roller 20 and blade 18 to the oleophilic inking drum 11 thence by means of form rollers 16, printing plate 15, and printing blanket 10 to the paper 12. The present invention provides and requires, in addition to the first transfer roller 13 a second transfer roller 17 for reasons hereinafter explained. FIGS. 14 through 16 represent alternative embodiments of the present invention and are similarly configured except that different ink or printing fluid input means 30 and locations of different dampening systems 14 are depicted to illustrate the versatility of the present invention. Preferably, the capacities of the input and circulation means 30 are manufactured to be less than about five gallons of ink or printing fluid. Other combinations of ink input systems and dampening systems can be visualized by those skilled in the art based on the teachings of this disclosure, without departing from its general intent.

As also shown in FIG. 14 an auxiliary transfer roller 213 can be utilized in rotational contact with the inking drum 11. The auxiliary transfer roller 213 transfers printing fluid to an auxiliary inking drum 211. A further auxiliary form roller 216 is in rotational contact with the auxiliary inking drum 211 and the plate

cylinder 15. Other variations of auxiliary rollers, drums and cylinders are possible for use with the present invention.

During practice of the keyless inking technology disclosed in U.S. Patent 4,690,055, it became apparent that should the need arise to install page-wide instead of press-wide keyless inking sytems, this separately-driven pan roller prior art would be particularly difficult to engineer. The central pages of a four wide newspaper press would require mounting and coupling the central two pan rollers to a separate drive system within the restriction of about only 3/4" margin between side-by-side page locations of a typical newspaper web.

In practicing the teachings of U.S. Patent 4,690,055 with newspaper presses four pages wide, one is compelled to manufacture a heavy, relatively large-diametered pan roller to avoid deflection or deformation in the unsupported central region. Doing so requires, in turn, a large size ink pan and reservoir assembly, which together with assorted pumps and hoses occupies considerable space just under the printing couple. Further, a minimum practical ink fluid level in the pan reservoir results in a relatively large working ink volume of 5 to 10 gal. This is an inconveniently large volume of ink to handle whenever an ink change is required.

It was also determined, in practicing the technology of U.S. Patent 4,690,055, that normal amounts of pan roller to metering roller contact pressure, corresponding to, for instance from 1/8" to 3/16" flat portion at the nip formed by the two rollers, can result in foreshortened metering roller lifetimes due to premature wear of the metering roller surface coatings. Depending upon the severity of the general printing conditions, the metering roller technologies of U.S. Patent Numbers 4,537,127; 4,567,827, and 4,601,242 may meter ink effectively for only 5 to 20 million printed copies instead of the expected 40 million copies or more, based upon doctor blade wear testing in the absence of a slow-moving pan roller in contact with the metering roller.

These and other reasons motivated the present invention leading to the present improved keyless inking system, which system retains all of the functional features necessary to practice trouble free lithographic keyless inking previously taught by U.S. Patent 4,690,055.

FIG. 18a represents in general the prior art roller configuration technology of U.S. Patent 4,690,055. FIG. 18b is similar but with pan roller 21 placed out of contact with the metering roller 20. FIGS. 18c, 18d and 18e represent similar keyless press roller configurations without a pan roller but with an added rider roller 29

in contact with metering roller 20. FIG. 18e, however, represents a press system having a second transfer roller 17 according to the present invention. All elements 10, 12, 15, 16 and 11 remained identical in the FIGS. 18a-18e configurations while these systems were evaluated for runnability and printability. All of them conveyed ink reasonably well to the paper substrate being printed. However, configurations using only one transfer roller 13 and no pan roller 21, namely the configurations of FIGS. 18c and 18d, resulted in measurably inferior uniformity of cross-press optical density values when running a critical format such as that shown in FIG. 20. This similarly-poor result was obtained using the configuration of FIG. 18b corresponding to the technology disclosed in U.S. Patent 4,690,055 excepting with a purposeful gap between the pan roller 21 and the metering roller 20. U.S. Patent 4,690,055 teaches that interference between the pan and metering rollers is preferred. The above disclosed result seems to verify this teaching. The instant result also verifies that a frictionally-driven press-speed rider roller 29 in place of the prior art slow-speed pan roller, when riding against the metering roller, Figures 18c and 18d, does not emulate the prior art performance quality. Certain of these results are included for reference in the Table depicted in FIG. 19.

When a frictionally driven roller 17 as in FIG. 18e was installed in contact with both the main inking drum 11 and the metering roller 20 and when using the same non-uniform format of FIG. 20, the printing system closely approximated the advantageous attributes of the prior art pan roller inker as taught by U.S. Patent 4,690,055. The corresponding results are also listed in the Table of FIG. 19.

The frictionally driven, press speed, second transfer roller of the present invention avoids the necessity for pressure indented contact of the metering roller with any inking roller operating at significantly different surface speed than the metering roller itself. We have found the useful lifetimes of the previously-disclosed, advantageous, hard, oleophilic, hydrophobic ink metering rollers may thereby be increased two-fold to ten-fold over that when the separately-driven pan roller technology of U.S. Patent 4,690,055 is employed.

Reasons for the advantageous, more uniform optical density effect are not clearly known. Certainly, if the additional differently-diametered roller 17 merely functioned to exchange and rearrange the ink in the cells of the ink metering roller 20, it should be expected that the FIG. 18c and 18d variations would function similarly to the FIG. 18e configuration. The Table of FIG. 19 verifies this is not the case and the dual-contact, two-

transfer roller configuration depicted in FIG. 18e is clearly superior.

Independent of the exact technical reasons, the present invention shows that a slow-moving ink-input pan-roller riding against the press-speed celled metering roller of the prior art is not the only configuration that provides the process functions necessary to assure minimum format dependence of optical density when printing with a keyless lithographic printing press. The slow-moving pan roller can be replaced by a second, press-speed transfer roller as herein disclosed and thereby obtain fully equivalent printed quality, while providing the new advantages of less circulating volume of printing fluid, smaller overall inker dimensions, less wear of the celled metering roller during printing operations and the opportunity to use any of several printing fluid input devices.

The invention is not limited to the particular details of the apparatus depicted and other modifications and applications are contemplated. Certain other changes may be made in the above described apparatus without departing from the true spirit and scope of the invention herein involved. It is intended, therefore, that the subject matter in the above depiction shall be interpreted as illustrative and not in a limiting sense.

THE CLAIMS DEFINING THE INVENTION ARE AS FOLLOWS:

1. In a keyless lithographic printing press having blanket cylinder and plate cylinder with printing plate mounted thereon, an improved keyless printing system, comprising:

means for supplying dampening water to the plate cylinder;

at least one form roller in rotational contact with the plate cylinder;

inking drum in rotational contact with said form roller;

at least first and second transfer rollers in rotational contact with said inking drum;

metering roller having at least an oleophilic and hydrophobic surface which is capable of retaining a quantity of printing fluid, said metering roller in rotational contact with said first and second transfer rollers; and

means for supplying printing fluid to said metering roller.

2. The improved keyless printing system according to claim 1, wherein said first and second transfer rollers are frictionally driven by at least said metering roller.

3. The improved keyless printing system according to claim 1, wherein, when said metering roller rotates during a printing operation, said first and second transfer rollers rotate and have a surface velocity substantially the same as the surface velocity of said metering roller.

4. The improved keyless printing system according to claim 1, wherein said means for supplying dampening water to the plate cylinder has at least a dampening roller in rotational contact with said plate cylinder.

5. The improved keyless printing system according to claim 1, wherein said means for supplying dampening water to the plate cylinder has at least a dampening roller in rotational contact with said inking drum, said inking drum thereby transferring said dampening water from said dampening roller to said plate cylinder via said form roller.

6. The improved keyless printing system according to claim 1, wherein said means for supplying printing fluid is an undershot fountain system which imparts printing fluid to said metering roller.

7. The improved keyless printing system according to claim 1, wherein said means for supplying printing fluid is an injector system which inputs printing fluid to said metering roller.

8. The improved keyless printing system according to claim 1, wherein said means for supplying printing fluid is a slit-manifold system which inputs printing fluid to said metering roller.

9. The improved keyless printing system according to claim 1, wherein said means for supplying printing fluid is a pressurized printing fluid and circulation system for providing printing fluid to said metering roller.

10. In a keyless lithographic printing press having at least an inking drum and a metering roller having at least an oleophilic and hydrophobic surface capable of retaining a quantity of printing fluid, an improved keyless printing fluid conveying means, comprising:

a plurality of transfer rollers in rotational contact with said inking drum and said metering roller, said transfer rollers conveying at least said printing fluid from said metering roller to said inking drum during operation of the printing press.

11. The improved keyless printing system according to claim 10, wherein said printing fluid conveying means comprises first and second transfer rollers.

12. The improved keyless printing system according to claim 10, wherein said plurality of transfer rollers are frictionally driven by at least said metering roller.

13. The improved keyless printing system according to claim 10, wherein, when said metering roller rotates during a printing operation, said plurality of transfer rollers rotate and have a surface velocity substantially the same as the surface velocity of said metering roller.

14. In a keyless lithographic printing press having blanket cylinder and plate cylinder with printing plate mounted thereon, an improved keyless printing system, comprising:

means for supplying dampening water to the plate cylinder;

at least one form roller in rotational contact with the plate cylinder;

inking drum in rotational contact with said form roller;

at least first and second transfer rollers in rotational contact with said inking drum;

metering roller having at least an oleophilic and hydrophobic surface which is capable of retaining a quantity of printing fluid, said metering roller in rotational contact with said first and second transfer rollers;

means for supplying printing fluid to said metering roller; and

said first and second transfer rollers being driven by at least said metering roller and having a surface velocity substantially the same as the surface velocity of said metering roller.

15. The improved keyless printing system according to claim 14, wherein said means for supplying dampening water to the plate cylinder has at least a dampening roller in rotational contact with said plate cylinder.

16. The improved keyless printing system according to claim 14, wherein said means for supplying dampening water to the plate cylinder has at least a dampening roller in rotational contact with said inking drum, said inking drum thereby transferring said dampening water from said dampening roller to said plate cylinder via said form roller.

17. The improved keyless printing system according to claim 14, wherein said means for supplying printing fluid is an undershot fountain system which imparts printing fluid to said metering roller.

18. The improved keyless printing system according to claim 14, wherein said means for supplying printing fluid is an injector system which inputs printing fluid to said metering roller.

19. The improved keyless printing system according to claim 14, wherein said means for supplying printing fluid is a slit-manifold system which inputs printing fluid to said metering roller.

20. The improved keyless printing system according to claim 14, wherein said means for supplying printing fluid is a pressurized printing fluid and circulation system for providing printing fluid to said metering roller.

DATED THIS 30TH DAY OF JULY 1991

ROCKWELL INTERNATIONAL CORPORATION

By its Patent Attorneys:
GRIFFITH HACK & CO.

Fellows Institute of Patent
Attorneys of Australia

81455/91

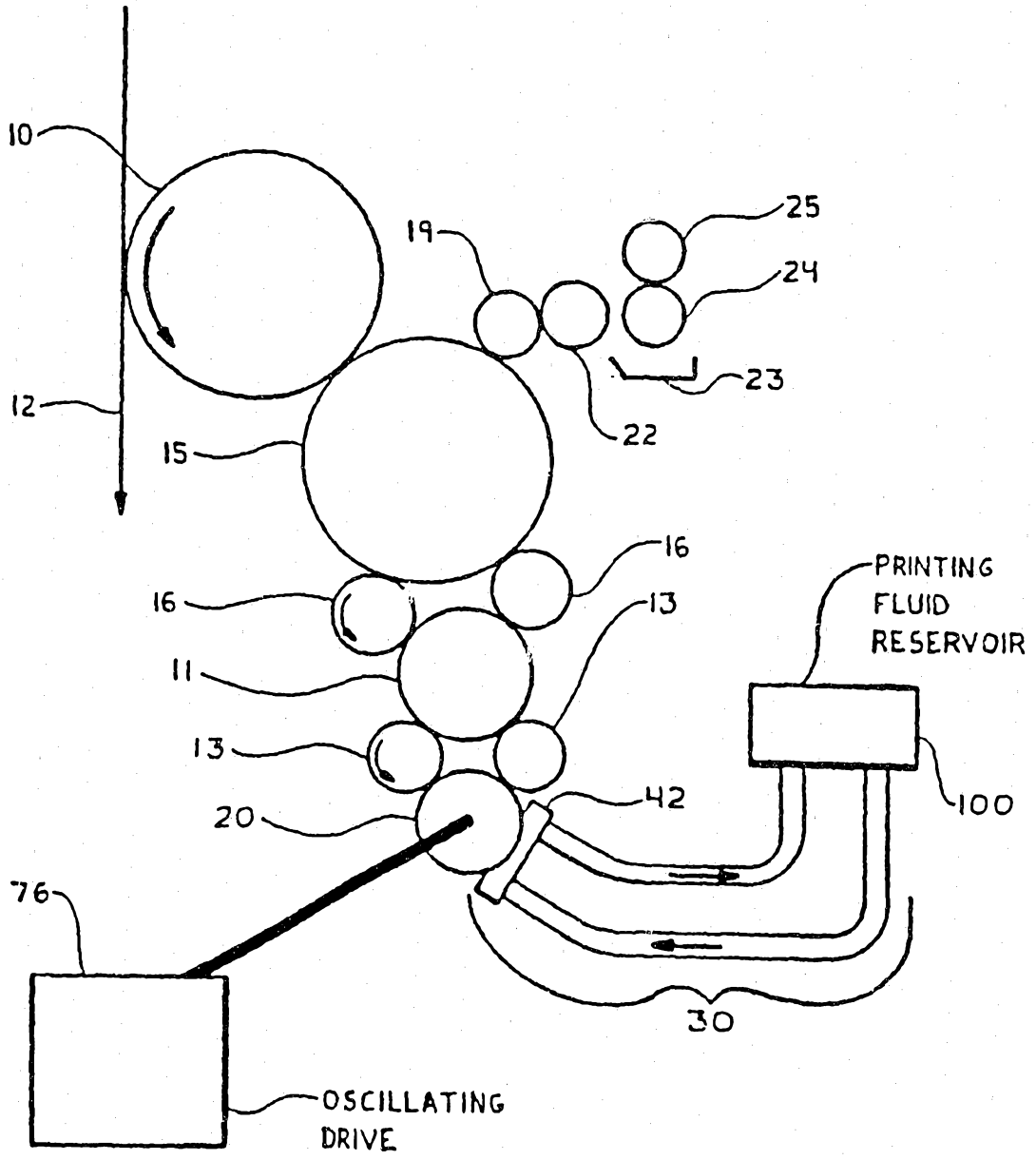

FIG.1

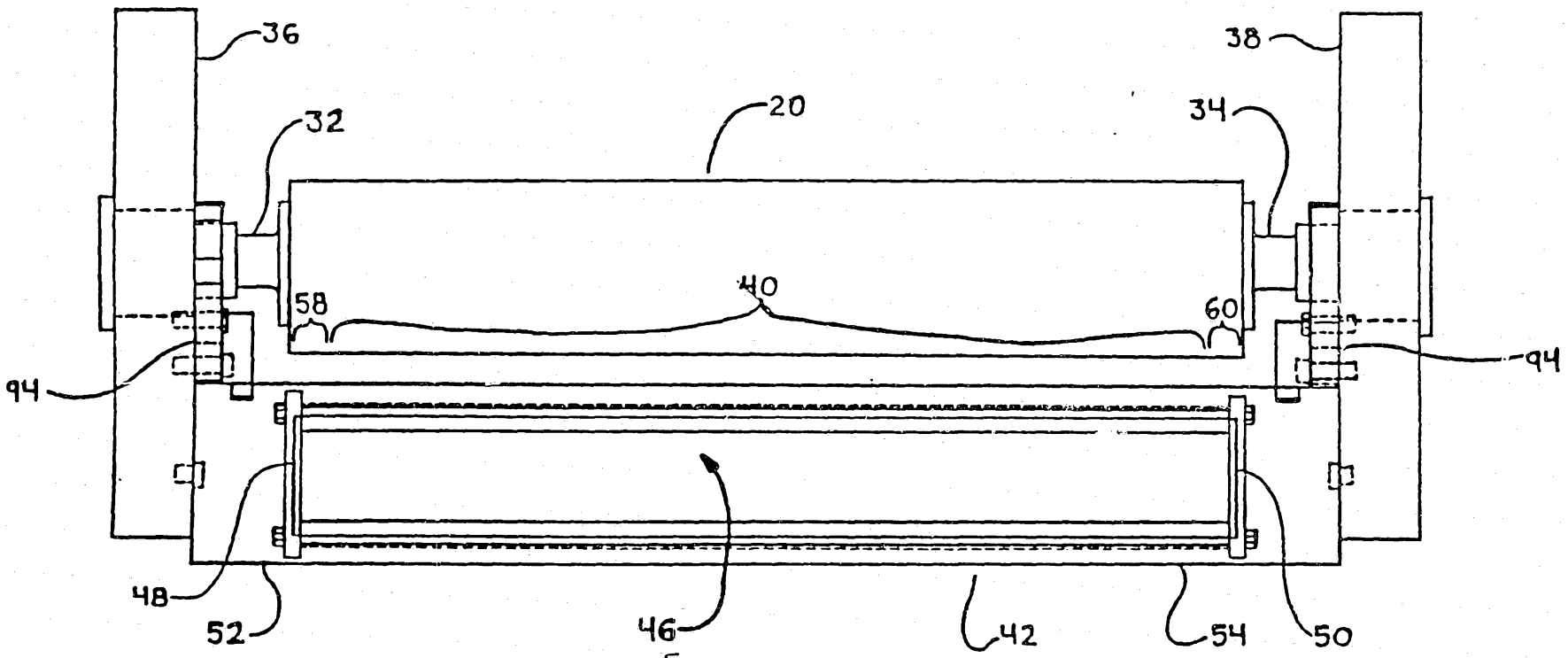

FIG.2

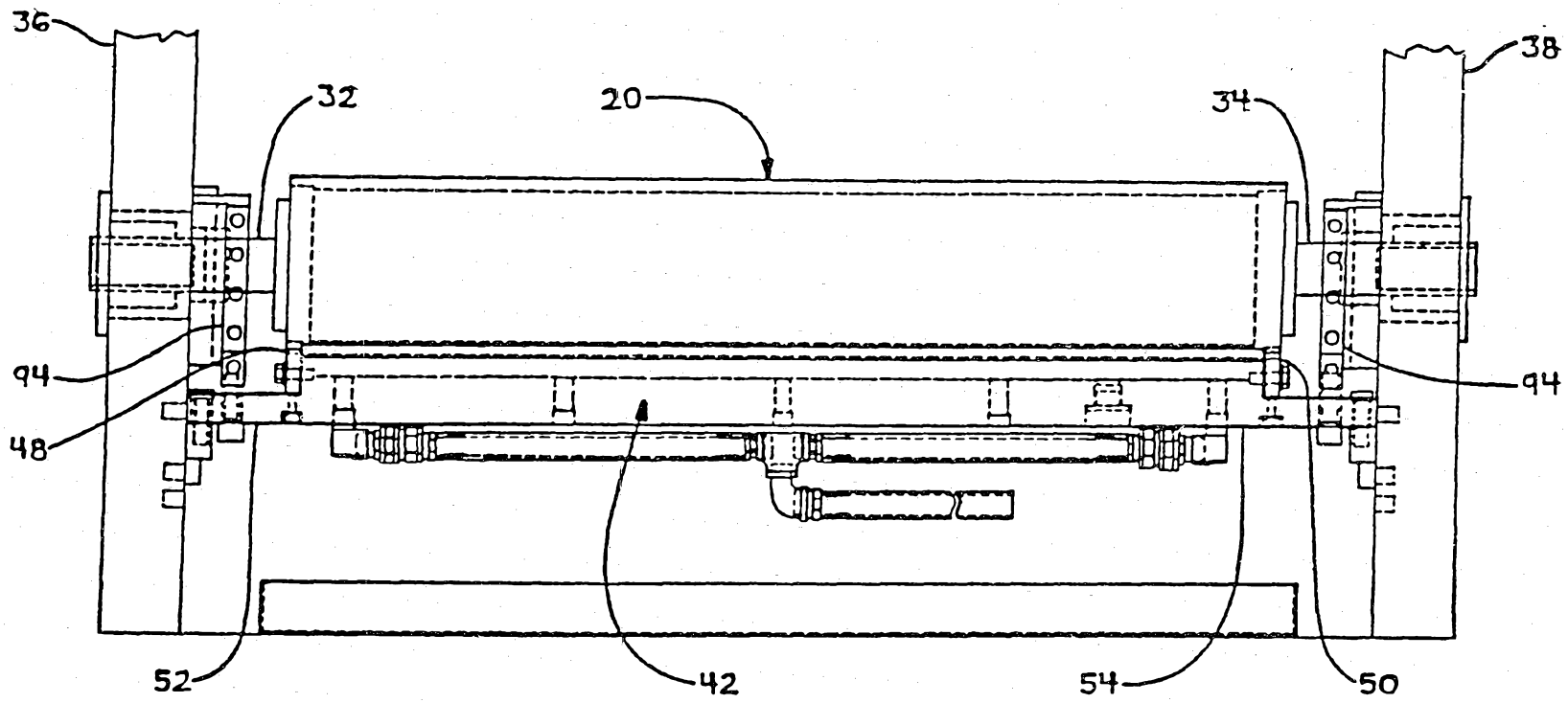

FIG. 3

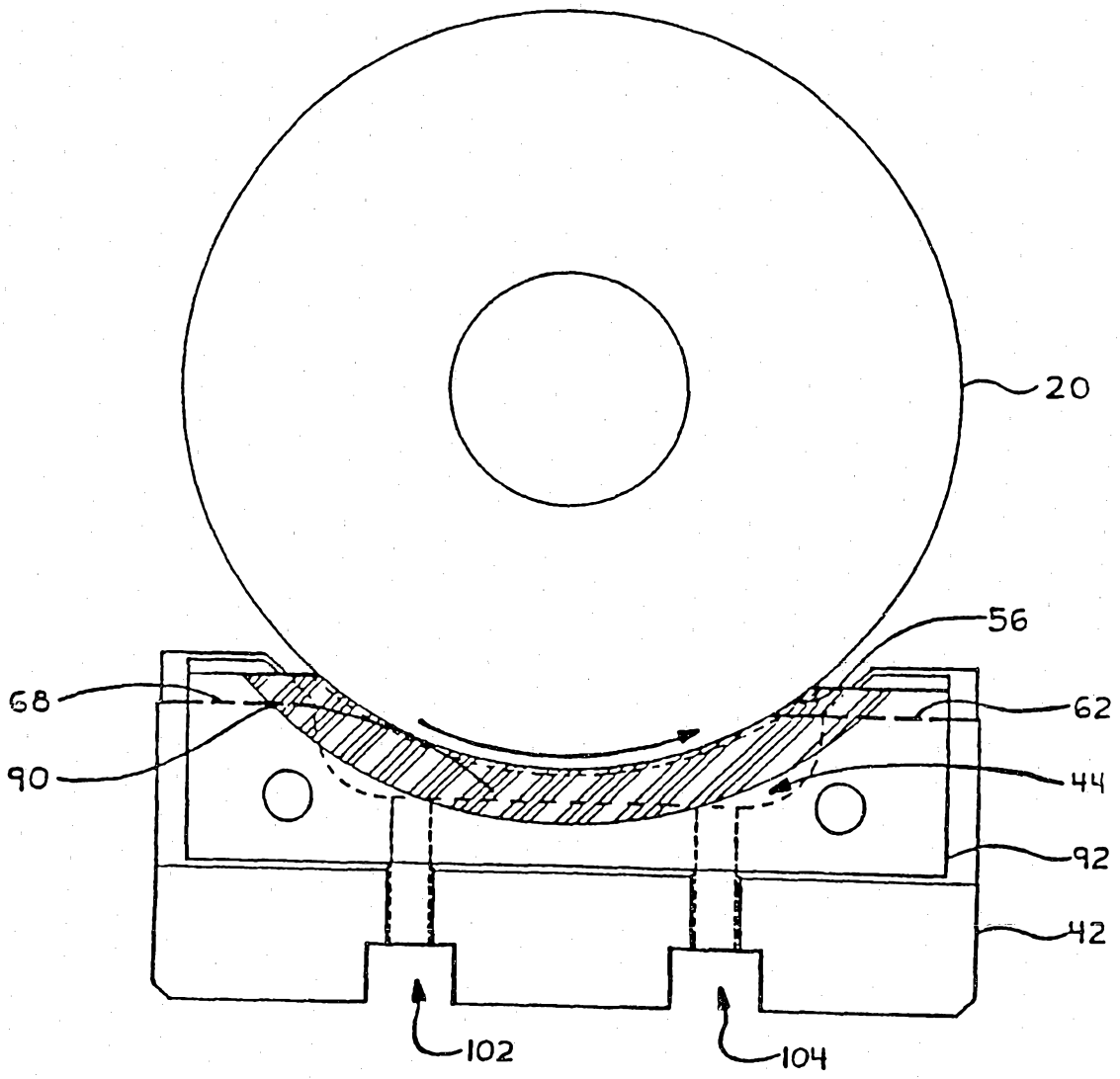

FIG.4

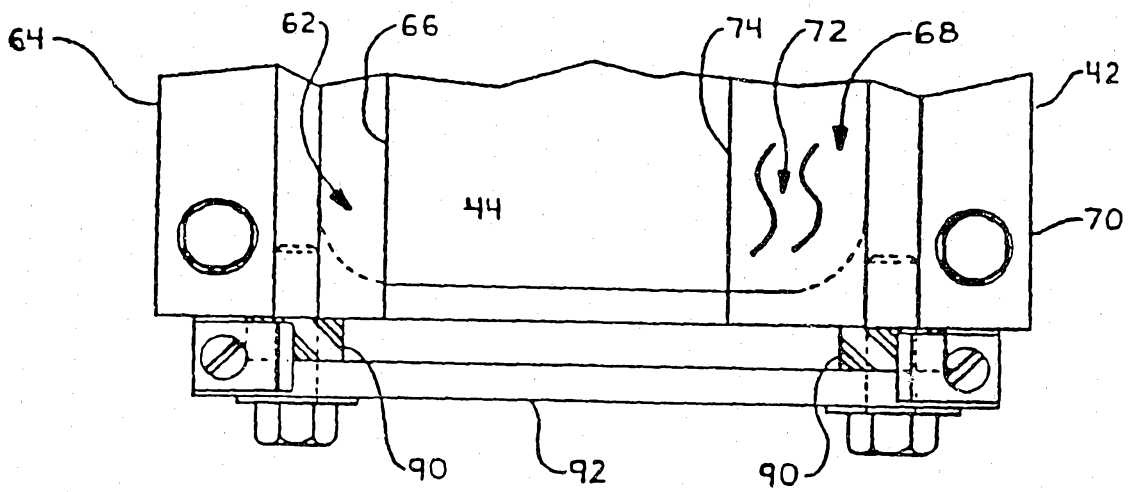

FIG.5

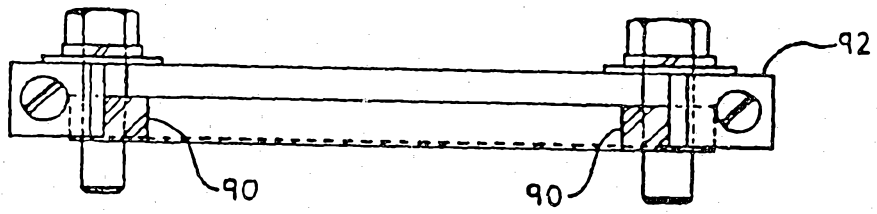

FIG.11

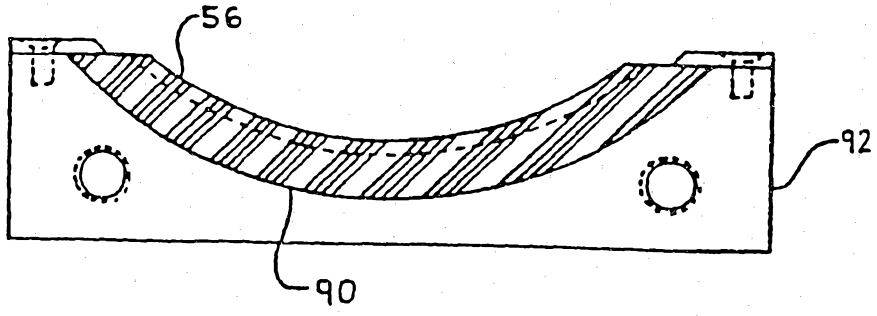

FIG.10

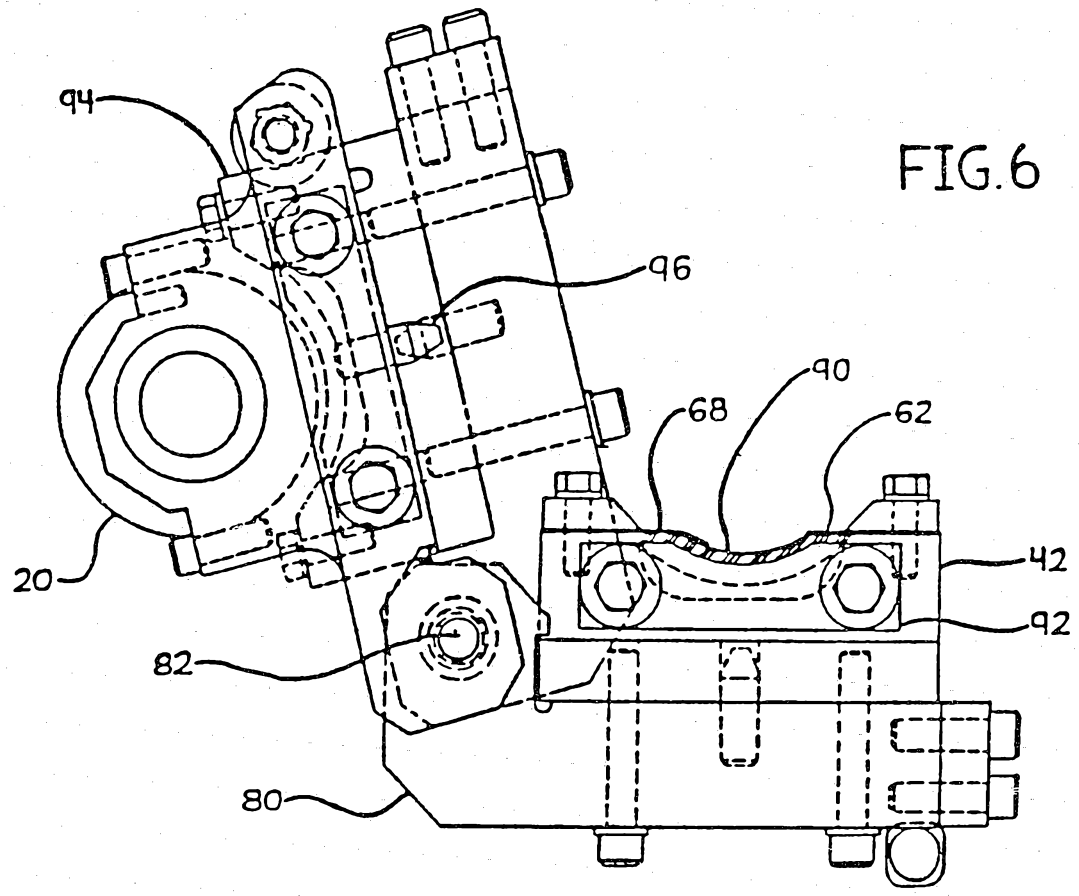

FIG.6

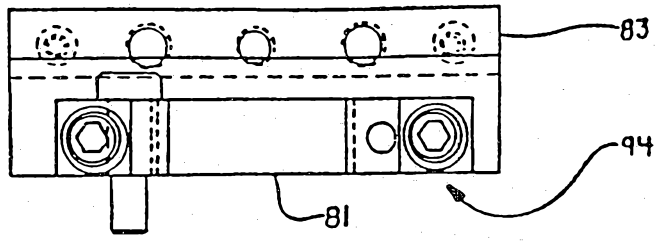

FIG.8

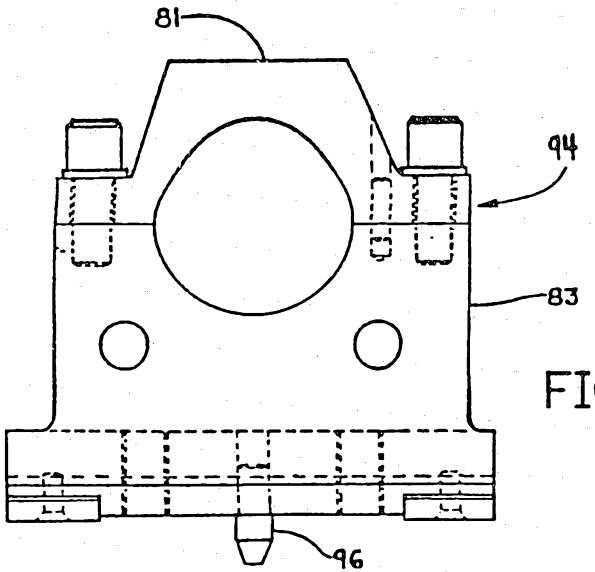

FIG.7

FIG.9

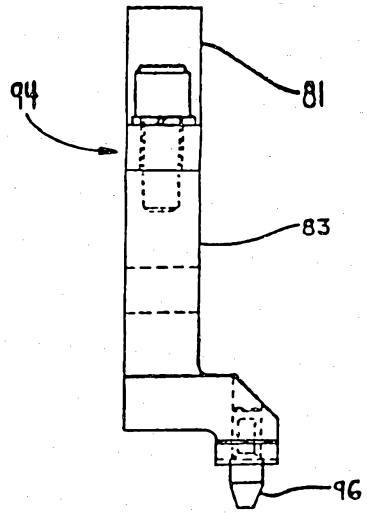

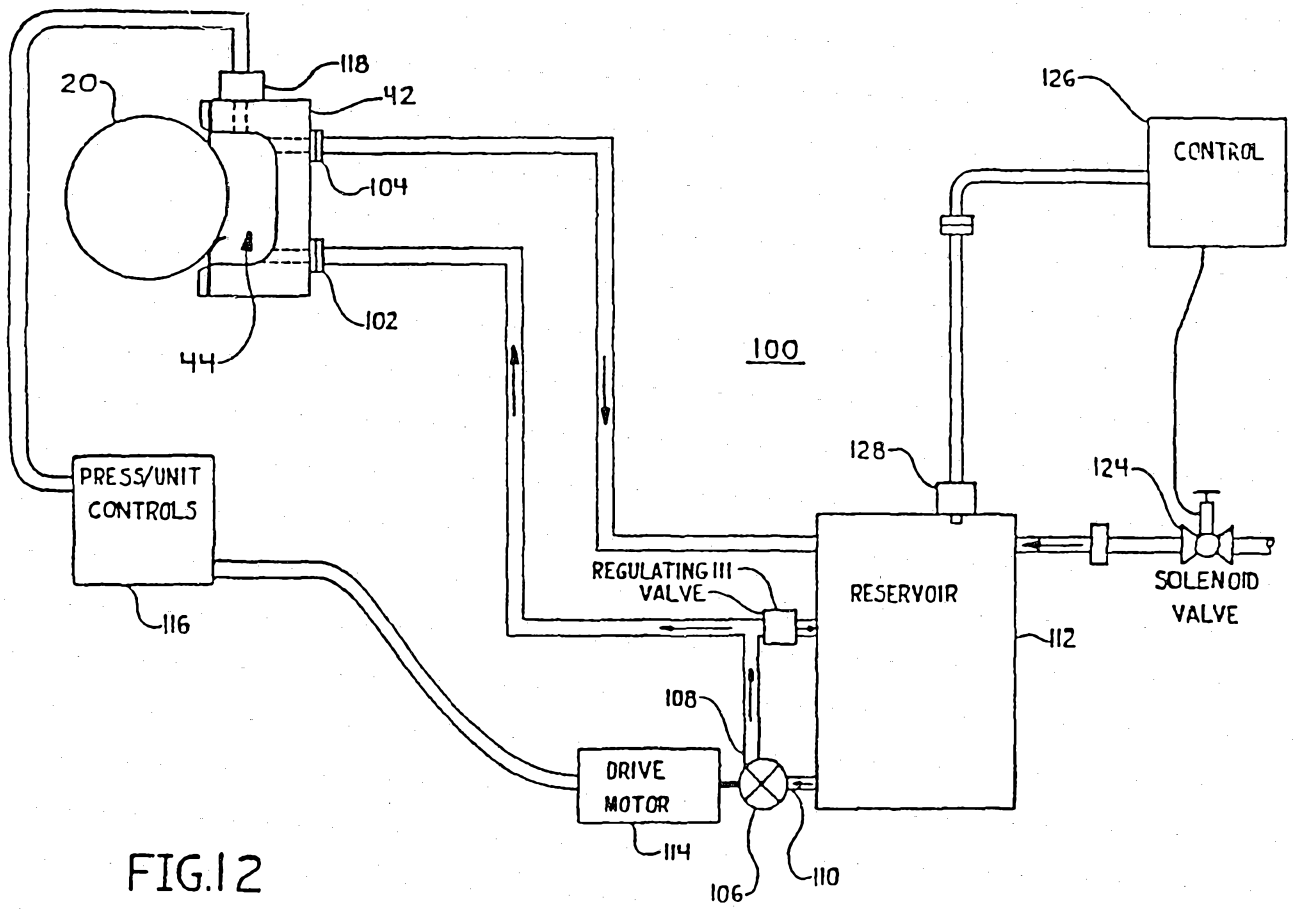
20
118
42
104
102
44
100
126
CONTROL
128
124
SOLENOID
VALVE
PRESS/UNIT
CONTROLS
116
REGULATING
VALVE
111
RESERVOIR
112
108
DRIVE
MOTOR
114
106
110

FIG.12

FIG.13

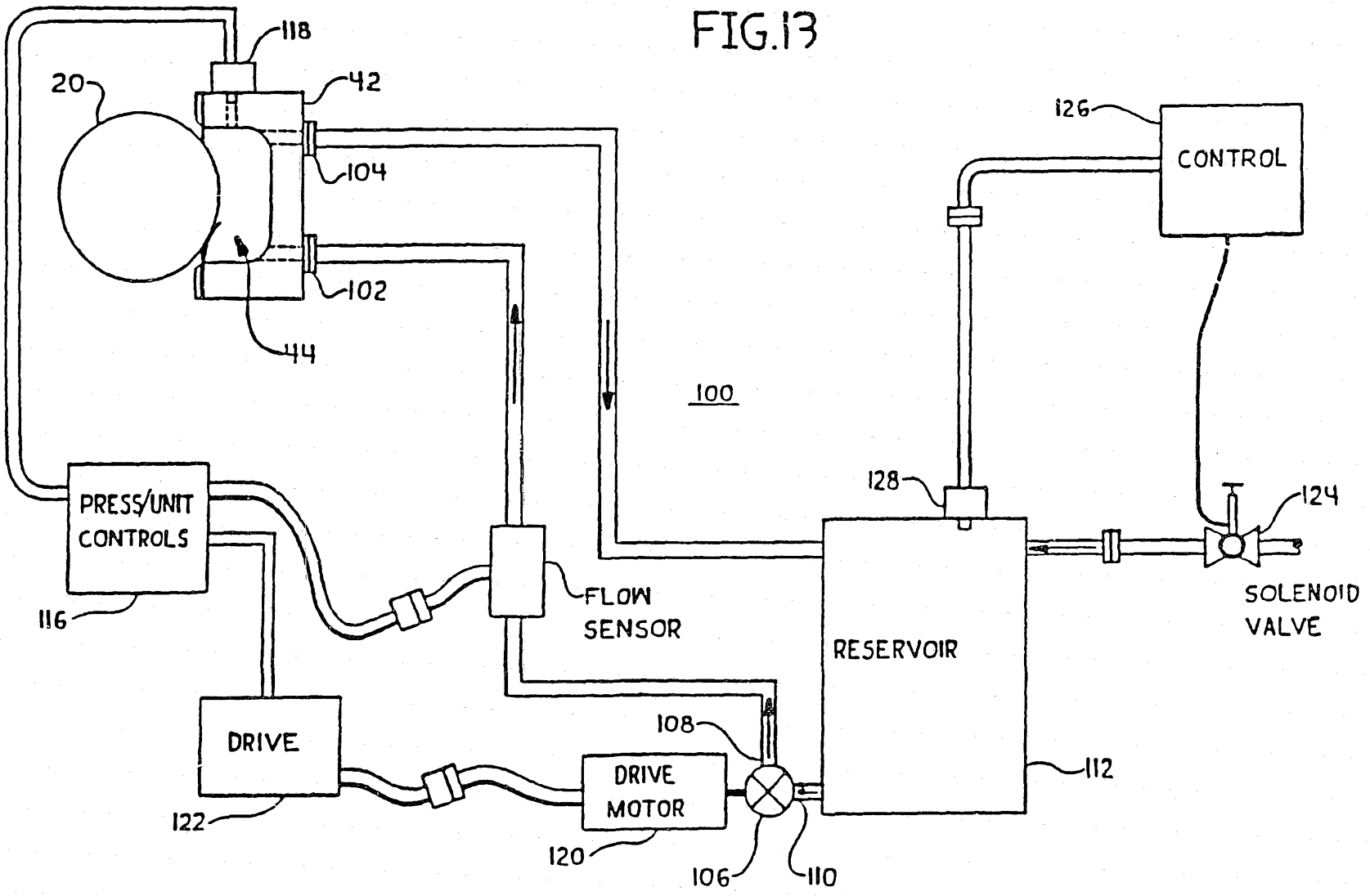
118
20
42
104
102
44
100
126
CONTROL
128
124
SOLENOID
VALVE
PRESS/UNIT
CONTROLS
116
FLOW
SENSOR
RESERVOIR
112
DRIVE
108
DRIVE
MOTOR
122
120
106
110

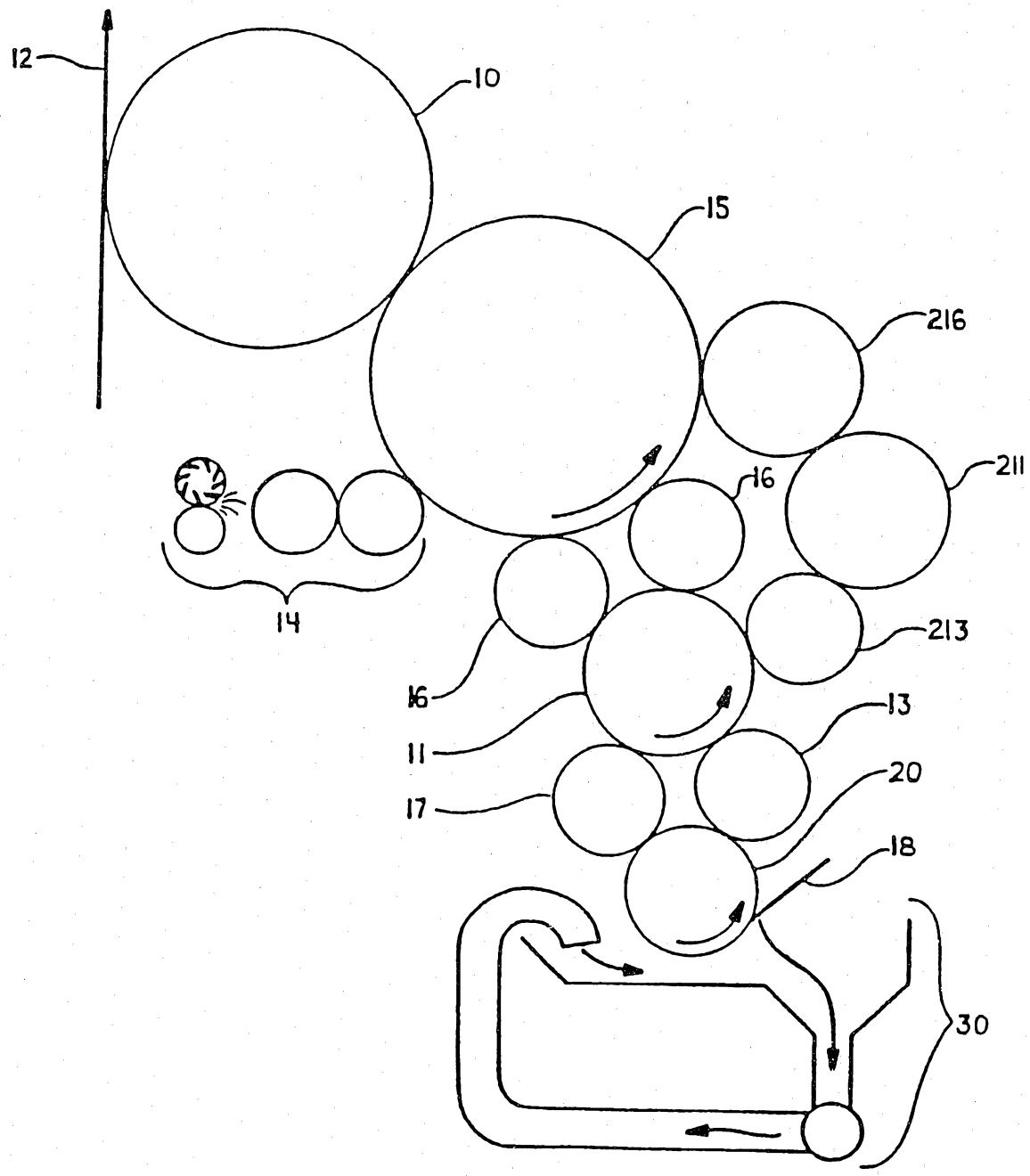

FIG.14

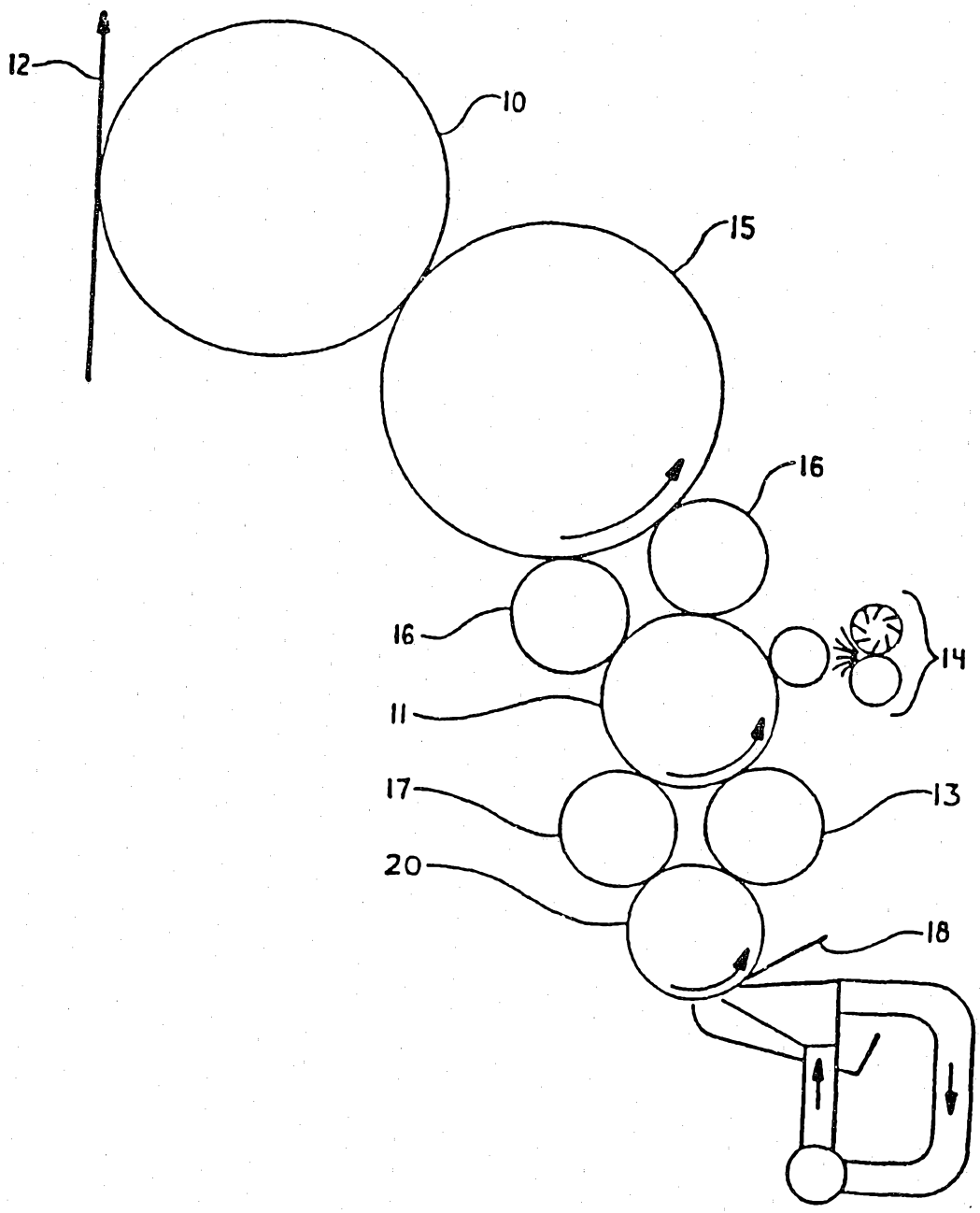

FIG.15

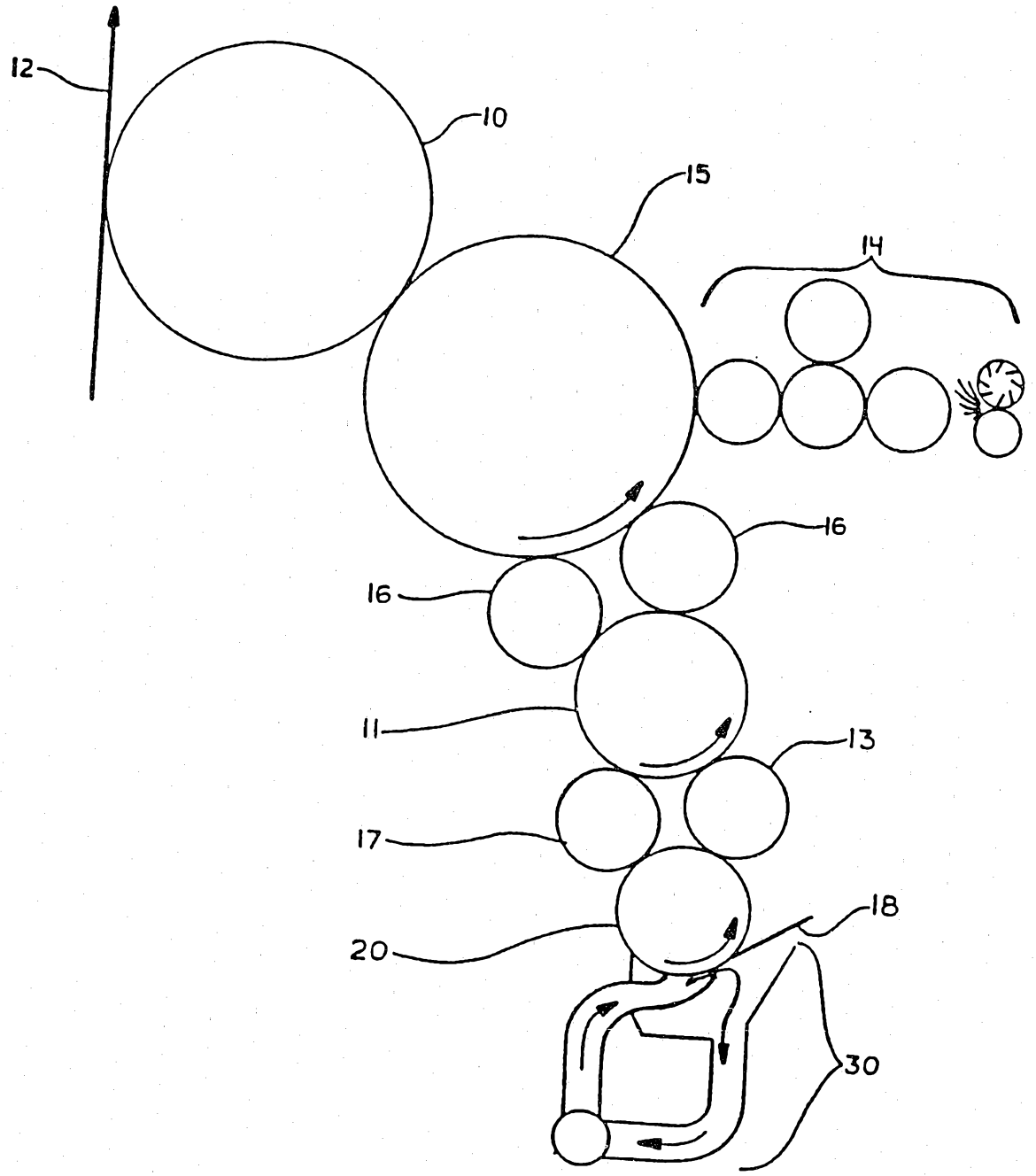

FIG.16

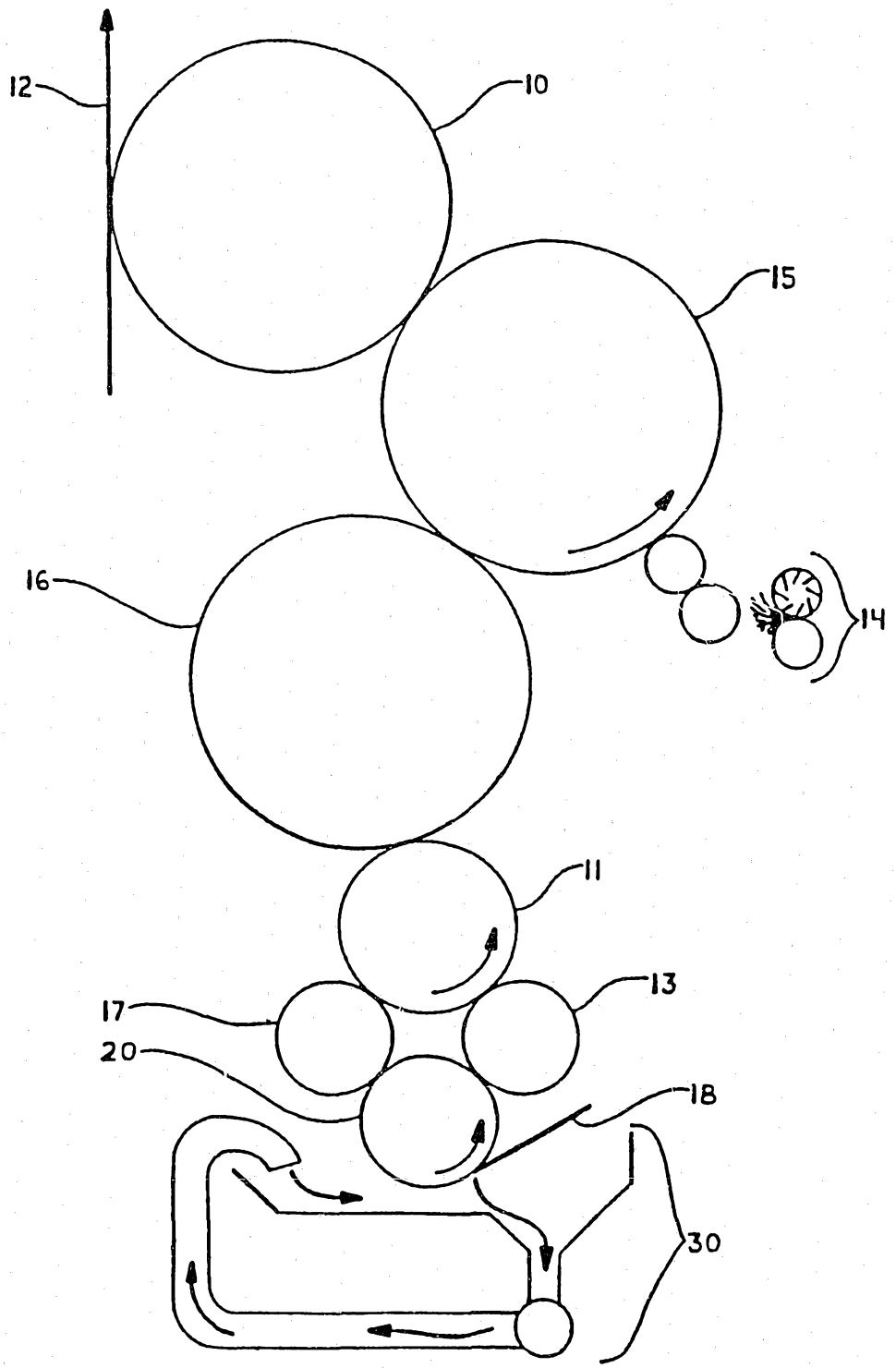

FIG.17

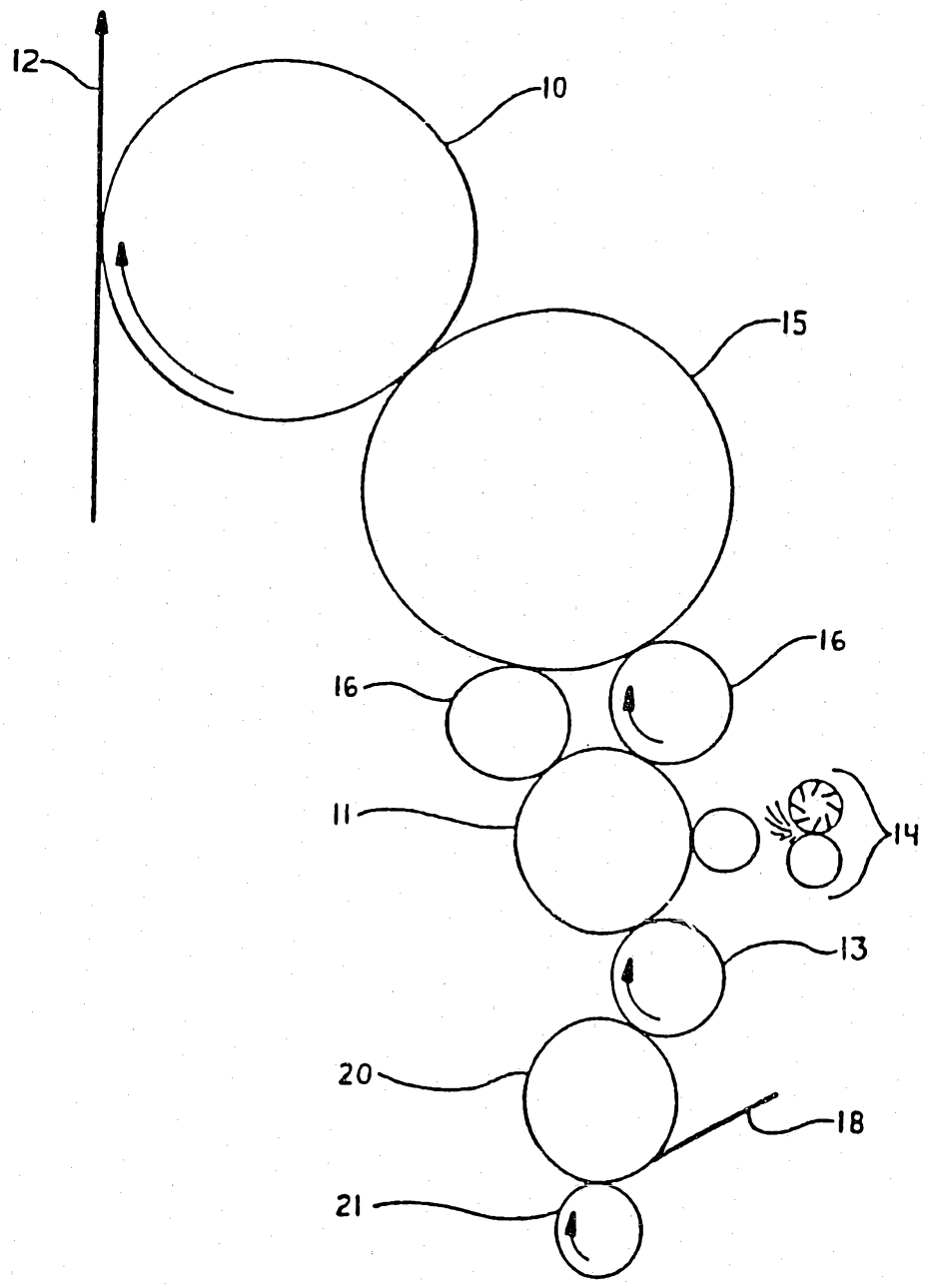

PRIOR ART

FIG.18A

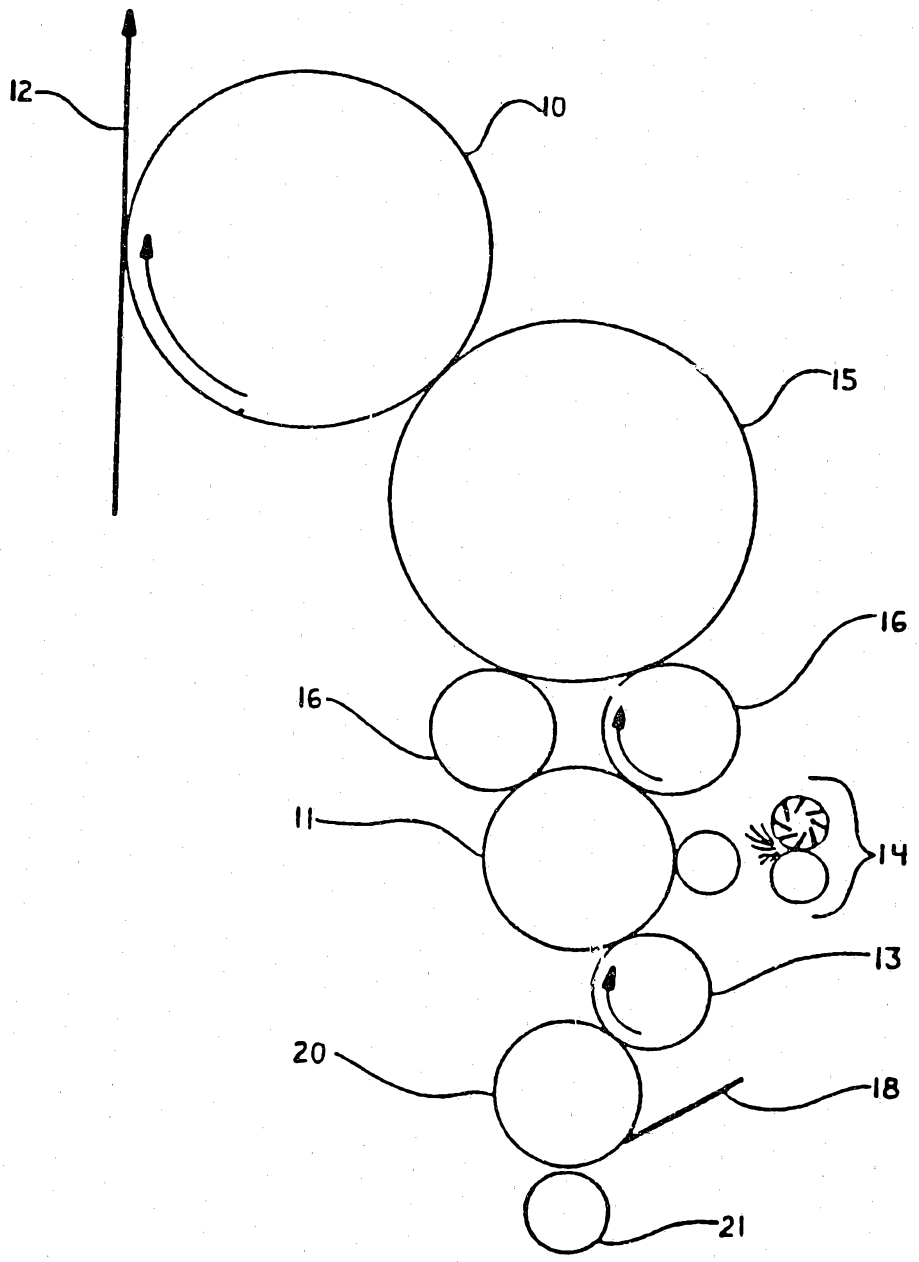

FIG.18B

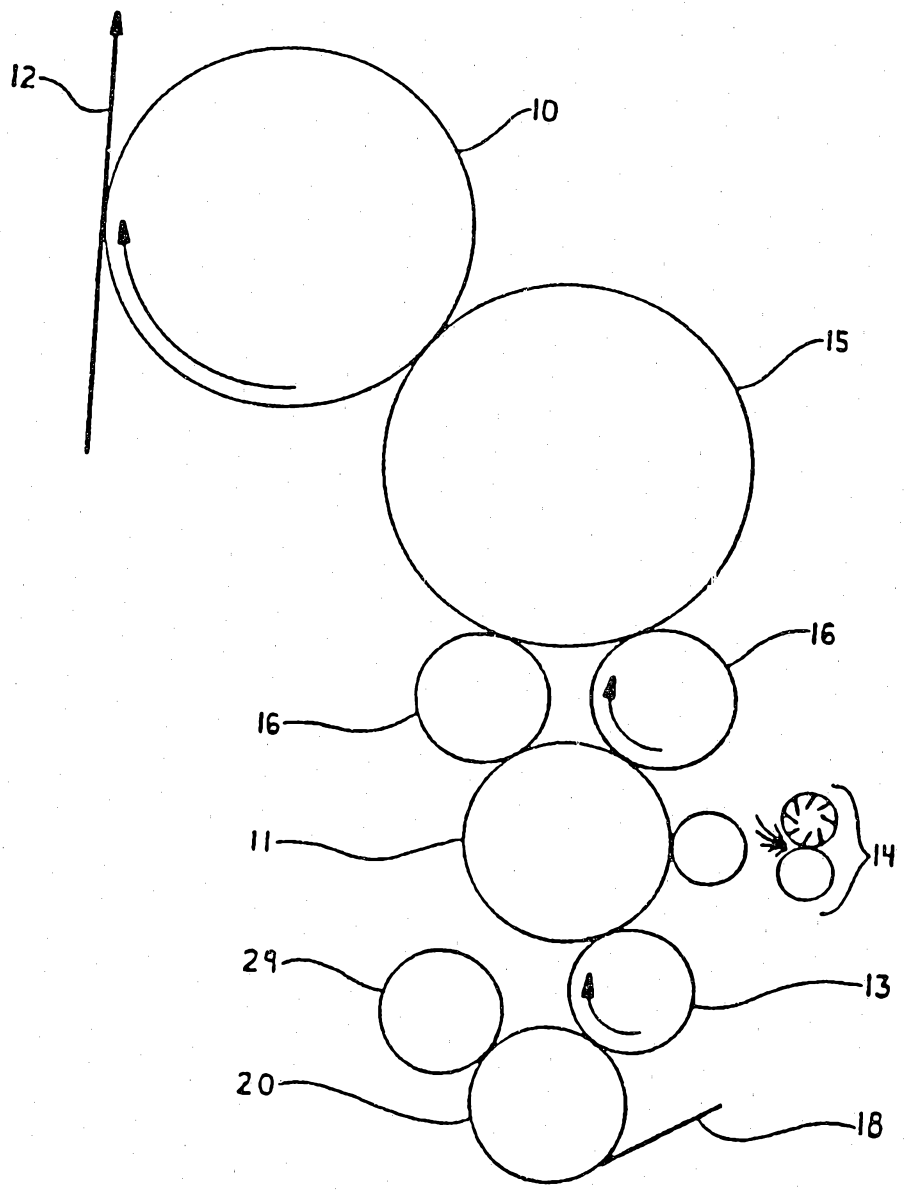

FIG.18c

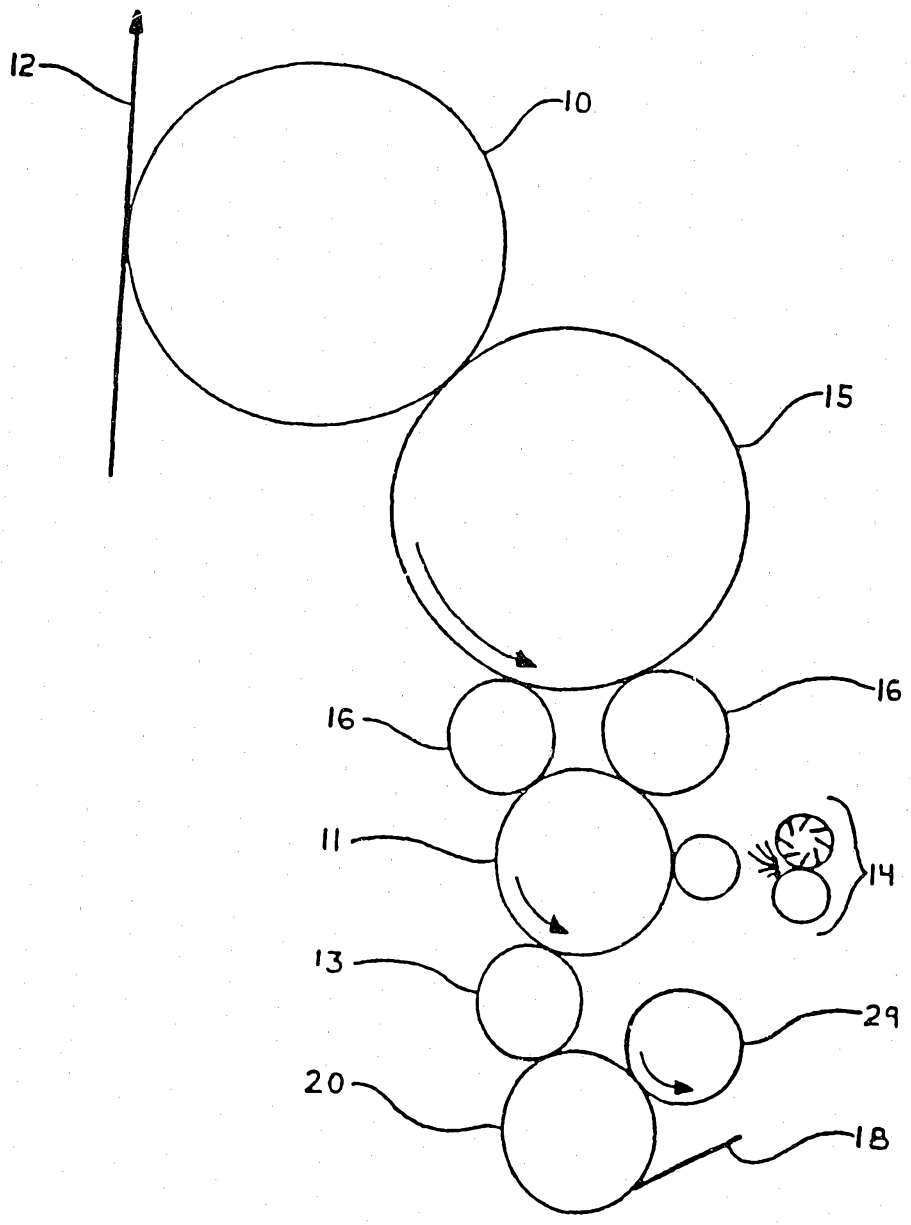

FIG.18D

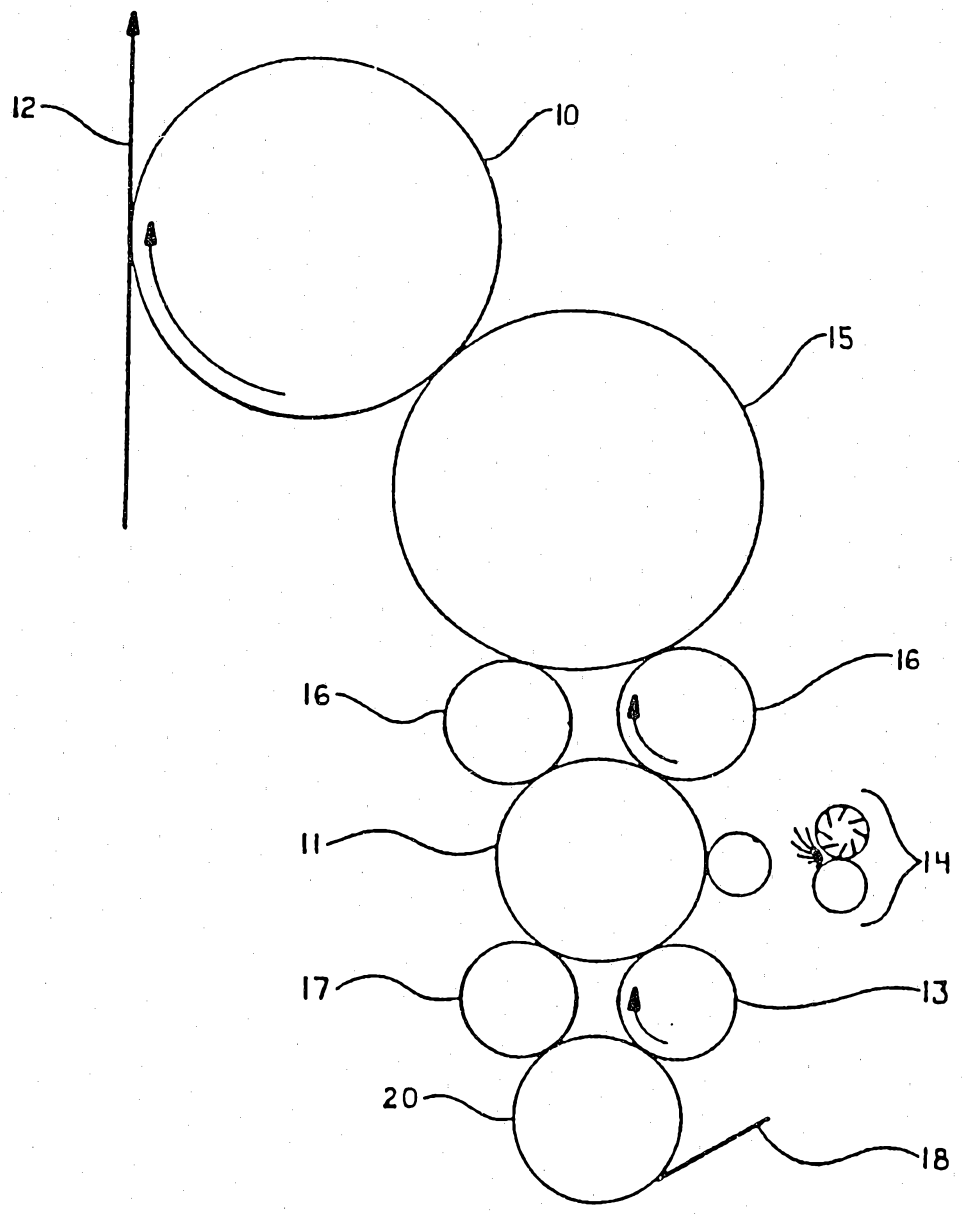

FIG.18E

TABLE 1. OPTICAL DENSITY VALUES AT VARIOUS CIRCUMFERENTIAL IMAGE CONTENTS FOR THE FIGURE 18A–18E CONFIGURATIONS

	OPTICAL DENSITY VALUES				
PERCENT IMAGE	CONFIG 18B	CONFIG 18C	CONFIG 18D	CONFIG 18E	U.S. PATENT 4,690,055 PRIOR ART CONFIG 18A
80	0.93	0.91	0.92	0.97	NA
60	0.98	0.96	0.99	1.02	NA
40	1.07	1.06	1.08	1.10	1.12
20	1.09	1.08	1.11	1.11	1.11
10	1.13	1.12	1.14	1.13	1.15
RATIO 10%80%	1.22	1.23	1.24	1.16	--
RATIO 10%40%	1.06	1.06	1.06	1.03	1.03

NA=NOT AVAILABLE.

FIG.19

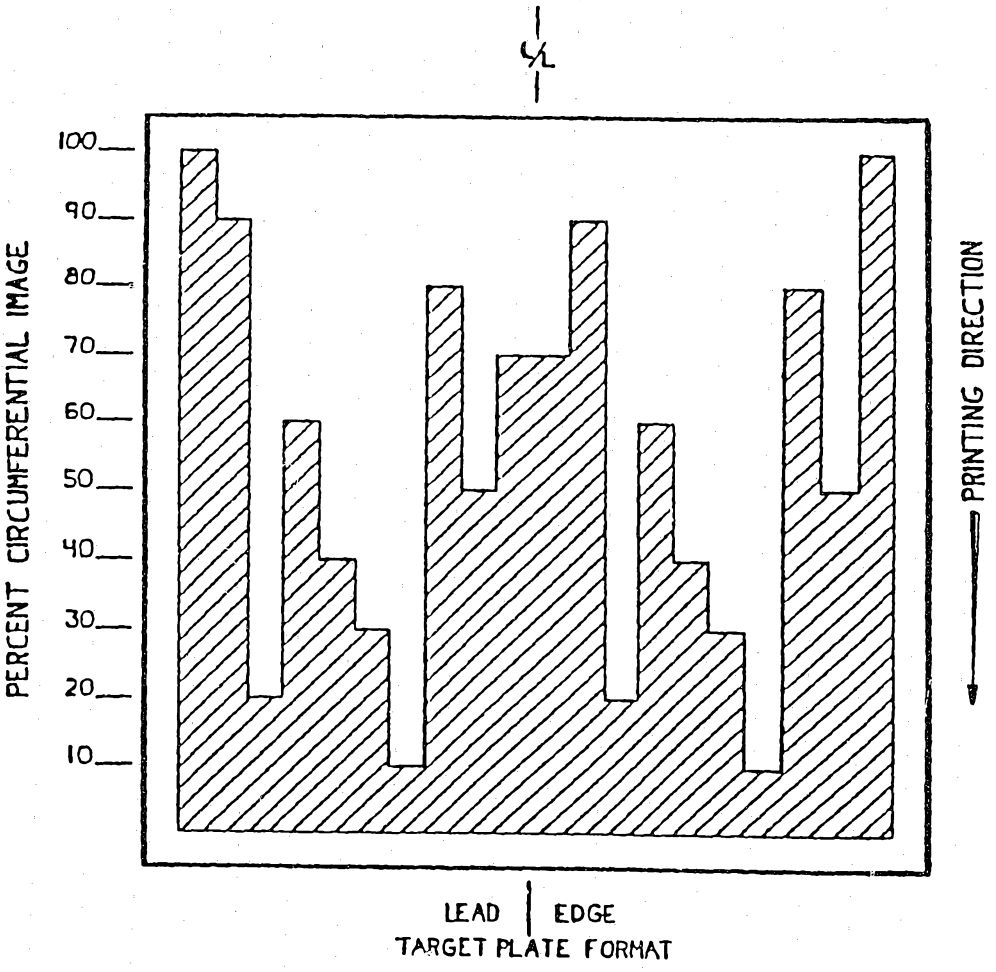
PERCENT CIRCUMFERENTIAL IMAGE
100
90
80
70
60
50
40
30
20
10
PRINTING DIRECTION
LEAD EDGE
TARGET PLATE FORMAT

FIG.20