Sept. 29, 1964 D. E. NOEL 3,150,664

ADJUSTABLE DIAPER

Filed March 13, 1963

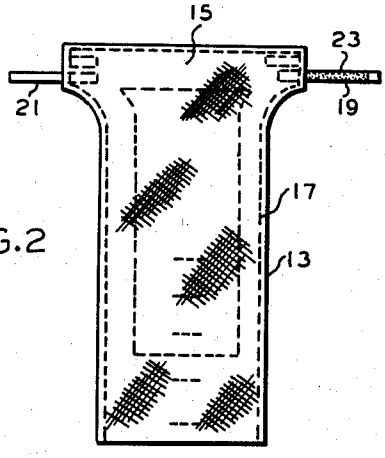

FIG.2

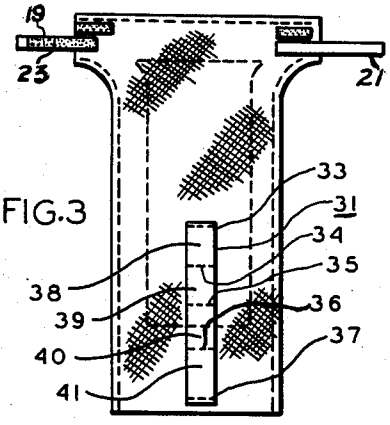

FIG.3

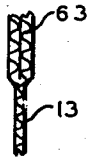

FIG.7

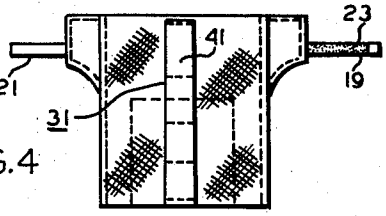

FIG.4

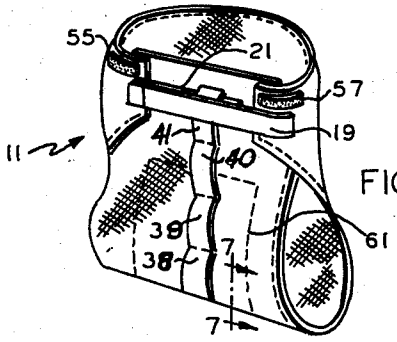

FIG.1

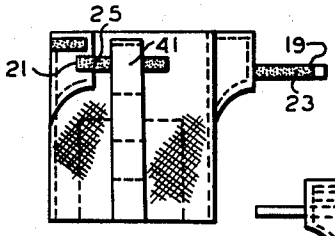

FIG.5

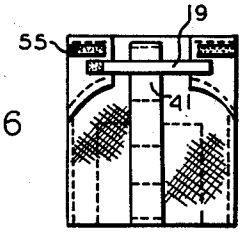

FIG.6

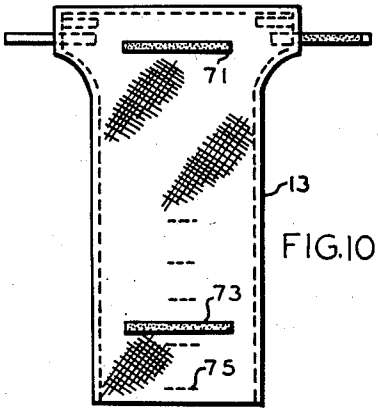

FIG.10

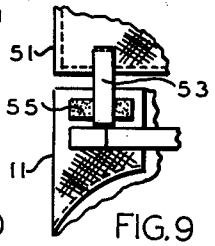

FIG.9

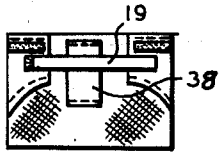

FIG.8

INVENTOR
DONALD E. NOEL

BY Fisher, Christen, Sabol & Caldwell
ATTORNEYS

United States Patent Office 3,150,664 Patented Sept. 29, 1964

3,150,664

ADJUSTABLE DIAPER

Donald E. Noel, 3515 Creighton Road, Pensacola, Fla.

Filed Mar. 13, 1963, Ser. No. 264,881
3 Claims. (Cl. 128—287)

The present invention appertains to new and useful improvements in baby diapers.

The invention provides, among the objectives thereof, a pinless, snapless, hookless diaper, in fact one free of hard or sharp fasteners in general; which is readily adjustable in both length and girth and is expandable and contractable to such an extent that a single size diaper will suffice for the entire diaper span period of an infant. Moreover, the diaper may be readily adjusted to any desired size without resort to bows, draw strings or rope of any type.

In addition to the foregoing, the present invention has as an object the provision of a diaper which does not require prefolding, but can be stored flatly and instantly adapted to proper size. Alternatively, the diaper admits of a single fold for storing in a size adapted to the infant's current measurements which size, of course, is readily adjustable to cope with the infant's growth.

The diaper construction includes contouring for accommodating various size leg openings, the structure being capable of maintaining the contoured fit as the diaper is adjusted for growth.

A further advantage and objective resides in an interlocking structure operative to secure the diaper in all respects regardless of the point of adjustment of either girth or effective length.

Both the effective width and effective length are adjustable without changing the actual width or length of the diaper material.

A still further advantage of the invention is the provision of an adjustable length diaper which makes use of the length not being used for extra padding. This is achieved by shortening the diaper through folding the excessive length inwardly and locking the configuation to maintain the extra padding.

An additional feature of the invention resides in its suitability to the use of non-wovens, such as synthetic films, or even paper films, normally produced in sheets. Obviously, suitable films should possess the qualities of high absorbency and softness, but in any event, the adjustable features of the invention are equally applicable to diapers cut from such films. As a matter of fact, plastic films may serve as an outer shell or protective liner by also employing the principles disclosed herein, such cover being similarly fitted to the baby to overlay the diaper.

A further feature and objective of the invention enables the use of extra padding in the same diaper supporting structure such that the article of the present invention may serve as either a night or day diaper. A padding may be inserted into a pocket or compartment of the diaper itself or may readily be affixed to the central area through extremely useful adherent means.

Briefly, the diaper comprises a sheet of foldable material, preferably cut in a semi-T configuration, wherein the stem of the T is relatively wide and arcuately connects with the bar of the T which is foreshortened. Mutually adherent straps or tabs extend outwardly from the foreshortened bar to comprise a waist band. A series of loops are deployed longitudinally of the exterior surface of the stem portion to facilitate length adjustment. The material forming the loops is preferably adherent with respect to at least one of the strap materials, such that when the diaper is folded over the front of the infant, the straps may interlock the appropriate loop for securing the length and may overlap sufficiently to fix the girth adjustment.

Similar adherent type material may be disposed on the interior surface of the diaper to receive extra padding, particularly for night diapering. Additional patches of such adherent material may also be employed to serve as anchors for adherent material depending from diaper shirts and the like.

With the foregoing in mind, the invention may further be comprehended and its objects and advantages may be more fully appreciated from the detailed description to follow, reference being made to the accompanying drawing, wherein:

FIG. 1 is a view in perspective of the diaper in its folded or operative configuration.

FIG. 2 is a view of the diaper of FIG. 1 in its open or flat condition, as seen from the interior side.

FIG. 3 is a view similar to that of FIG. 2 of the diaper in its open condition, but viewed from the exterior side.

FIG. 4 illustrates the structure following the first step in the folding of the diaper to fit an infant, the body portion simply being folded upon itself.

FIG. 5 shows the diaper of FIG. 4, with the left hand tab inserted through one of the loops provided for length adjustment.

FIG. 6 shows the diaper of FIG. 5 with the right hand tab overlying the loop material and in adherent relation with the left hand tab.

FIG. 7 is a sectional view to show extra padding of the diaper of FIG. 1.

FIG. 8 is a view similar to FIG. 6, but showing the diaper shortened proportionately to fit a smaller infant.

FIG. 9 is a partial view showing one means of connecting the diaper to a shirt, and

FIG. 10 illustrates a suitable means for attaching extra padding for the diaper, or alternatively attaching a plastic shell or liner to overlay the diaper.

Considering first FIGS. 1–3, it will be seen that the diaper **11**, comprises a thick stemmed body portion **13** and a foreshortened transversely disposed bar portion **15** adapted to serve as a waist band. It should also be noted that the thickly stemmed body portion **13** arcuately tapers into the waist band **15**.

Obviously the body and waist band portions of the diaper are adapted to be cut from one or more layers of cloth or non-woven film. When multiple layers are employed, the peripheral hemming, indicated by the stitches **17**, shows one manner of joining the layers to comprise the highly absorbent, suitably soft, foldable sheet-like material.

Secured to opposite ends of the waist band portion **15** are the straps or tabs **19** and **21**. From FIG. 2 it will be noted that the interior surface of the tab **19** is equipped with an adherent material **23**; whereas from FIG. 3 it will be seen that an adherent material **25** appears on the exterior side of the tab **21**. The materials **23** and **25** are preferably of the well known nylon loop and nap variety capable of co-acting to provide a dependable attachment.

Also, as is best seen in FIG. 3, a longitudinally disposed strip **31** is secured at spaced apart positions, represented by the stitching **33–37**, to the extrior surface of the body portion **13**, thereby forming the loops **38–41**. The strip **31** is preferably of nylon or other material which will adhere to at least one of the surfaces **23** and **25**.

From FIG. 4 it will be seen how the body portion **13** is folded upon itself with loop **41** of the strip **31** in alinement with the tabs **19** and **21**. FIGS. 5 and 6 show how the tabs **19** and **21** are utilized for interlocking the loop **41** to determine the effective length of the diaper and also to fix its girth by appropriate overlay. It should be borne in mind that the operations depicted in FIGS.

4–6 can be effected with the use of only one hand and thus diapering is extremely simplified.

In FIG. 5, the tab **21** is shown inserted through the loop **41** with its adherent or nap side **25** exposed, and the tab **19** is depicted in its extended position with its adherent or loop side **23** visible. In FIG. 6, the outer tab **19** is shown overlying both a portion of tab **21** and loop **41** to effectively interlock the adjusting structure thereby fixing both the effective length and girth of the diaper.

While the diapering operation illustrated in FIGS. 4–6 provides for a maximum length diaper, the showing of FIG. 8 depicts a minimum length diaper with a slightly smaller girth. This diminishment is effected by folding the body portion **13** inwardly until the last loop **38** is alined with the tabs **19** and **21**. These elements are then interlocked with further overlay of tab **19** relative to tab **21** to provide the girth decrease. It will be appreciated that the folded over body material **13** augments the padding on the interior of the diaper to serve a useful purpose.

In FIG. 9 there is depicted a shirt or top garment **51** attached to the diaper **11** through means of a tab **53** which overlays a tab **55** on the diaper. Here, also, the material employed on tabs **53** and **55** may conform to that used on the waist band tabs **19** and **21** to provide a convenient attachment of a type which permits detachment upon peeling of the tab **53** from tab **55**. Any number of such cooperating tabs may be employed, but the diaper **11** of FIG. 1 shows two such spaced apart tabs indicated at **55** and **57**.

FIGS. 7 and 10 disclose alternative methods of increasing the padding or providing additional protection. The cross-sectional view of FIG. 7 is taken through the pocket or compartment **61** of FIG. 1 to show one or more extra layers **63** of padding material incorporated into the most desirable central section of the diaper material.

FIG. 10 shows a convenient manner of attaching extra padding to the interior of the diaper. A pair of holding or receiving strips **71** and **73** are deployed in spaced apart relation, for example, on the interior surface of the diaper, to receiving padding material which has affixed thereto co-acting holding strips (not shown) adapted for attachment to the strips **71** and **73** in the manner of the co-acting tabs heretofore described. This facilitates the addition of extra padding particularly for night diapering and its ready removal.

Alternatively, the showing of FIG. 10 may represent a plastic or otherwise water resistant cover provided for overlaying the diaper, following the usual custom of using water tight pants or liners. However, the plastic liner of FIG. 10 may incorporate the adjustable features of the present invention and also may use the attaching strips **71** and **73** to cooperate with mating attaching strips (not shown) on the diaper or in fact they may provide attachment to nylon material, such as the strap **31**, suitably disposed along the exterior surface of the diaper. In any event, such a shell or liner may be equipped with its own securing loops (not shown) but indicated by the stitching **75**, in the manner heretofore explained.

While the invention has been described in relation to certain preferred embodiments thereof, it nevertheless will be apparent to those skilled in the art that certain modifications may readily be made within the scope of the principles disclosed. For example, on the tabs such as **19** and **21**, or on any of the others, the nap and loop material may be reversed, or in fact, both sides of the tabs may include adherent material, such that either tab may overlay the other. It should be mentioned that in any event, in the structure of the present invention, only the soft, absorbent body and waist band material touches the infant, and even the nylon nap and loop material is shielded. Therefore, it is intended that the scope of the invention be defined and limited only by the appended claims, wherein:

What is claimed is:

1. A diaper comprising, in combination a sheet-like element including a wide-stemmed body arcuately tapered to a relatively narrow transversely disposed waistband wherein the width of the waistband is of the order of one-sixth to one-eighth of the length of the sheet-like element and the waistband extends laterally beyond the body in opposite directions and in symmetrical relation thereto; a series of loops disposed on one surface of the body, extending and centered along a line bisecting the sheet-like element longitudinally; said loops extending from substantially the end of the sheet-like element opposite from the waistband in a direction toward the waistband and for a length of approximately one-half that of the sheet-like element; and a pair of elongated adherent tabs secured to the waistband substantially at the ends thereof and extending in opposite directions relative to the body whereby folding of the body upon itself with said one surface on the outside disposes at least one of the loops in alignment with said tabs to permit the tabs to be secured together adjacent said one loop with said one loop interlocked therebetween.

2. A diaper adjustable as to girth and effective length comprising, in combination a sheet of foldable material of semi-T configuration having a widened stem portion arcuately tapering into a foreshortened bar portion, the latter comprising a waistband having a width which is less than 20% of the length of the sheet, said waistband extending laterally beyond the stem portion in opposite directions therefrom; fastening straps secured to the bar substantially at the opposite ends thereof; said straps each having at least one adherent surface, said surfaces being capable of mutally attaching co-action when joined; a plurality of longitudinally disposed loops on the exterior surface of the foldable material extending from the end of the sheet which is oppositely disposed from the stem portion in the direction of the bar portion for at least one-third the length of the sheet, said loops being affixed to the foldable material in longitudinal alignment relative thereto; the stem portion of the sheet being adapted to be folded inwardly to successive positions of alignment of the loops relative to the straps, said straps being adapted for attachment along their adherent surfaces with variable lengths thereof overlaid to provide girth adjustment; and said straps adapted for engagement through a selected one of said loops to provide length adjustment, said selected loop being disposed between the ends of the bar when the diaper is secured about the baby.

3. The product of claim 2 wherein said diaper comprises a cover of water-resistant material and including adherent means affixed to the interior surface of the sheet and absorbent padding material secured adjacent said interior surface by said adherent means.

References Cited in the file of this patent

UNITED STATES PATENTS

2,568,590	Laser	Sept. 18, 1951
2,714,889	Chambers	Aug. 9, 1955
2,834,347	Connally	May 13, 1958
2,838,048	Kowalski	June 10, 1958
2,931,747	Dexter	Apr. 5, 1960
3,044,467	Campau	July 17, 1962
3,049,124	Thompson	Aug. 14, 1962
3,081,772	Brooks et al.	Mar. 19, 1963
3,089,494	Schwartz	May 14, 1963