United States Patent

Bickmore

[15] **3,641,980**

[45] **Feb. 15, 1972**

[54] **DEVELOPMENT APPARATUS**

[72] Inventor: **John T. Bickmore**, Rochester, N.Y.

[73] Assignee: **Xerox Corporation**, Rochester, N.Y.

[22] Filed: **Oct. 20, 1969**

[21] Appl. No.: **867,648**

[52] **U.S. Cl.** **118/637**, 117/17.5, 355/3

[51] **Int. Cl.** **B05b 5/02**, G03g 13/00, G03g 15/00

[58] **Field of Search** .....118/637, 636; 117/17.5; 355/3; 95/1 A; 96/1 A, 1 R, 1 SD, 1 E

[56] **References Cited**

UNITED STATES PATENTS

3,058,405	10/1962	Limberger	118/637 X
3,392,432	7/1968	Naumann	118/637 X
3,402,698	9/1968	Kojima et al.	118/637
3,415,224	12/1968	Hudson	118/637
3,437,074	4/1969	Hagopian et al.	118/637 X
3,455,276	7/1969	Anderson	118/637
3,457,900	7/1969	Drexler	118/637
359,394	3/1887	Jones et al.	85/1 F
491,469	2/1893	Carver	85/8.8
690,335	12/1901	Wesley	85/1 F
1,820,925	9/1931	Toncray	85/8.8
2,203,397	6/1940	Taylor	85/8.8
2,353,933	7/1944	Schneider	85/8.8
2,283,526	5/1942	Albin	24/221 A
2,311,592	2/1943	Hapanowicz	24/221 A
3,009,381	11/1961	Rapata	85/7

FOREIGN PATENTS OR APPLICATIONS

889,202	2/1962	Great Britain	118/637
797,380	7/1958	Great Britain	85/DIG. 2

OTHER PUBLICATIONS

IBM, Technical Disclosure Bulletin, Development of Electrostatic Images, H. C. Medley, Vol. 2 No. 2, Aug. 1959 118/637

Primary Examiner—James Kee Chi

Attorney—James J. Ralabate, Donald F. Daley and Robert W. Mulcahy

[57] **ABSTRACT**

Apparatus for developing an electrostatic image including a train of rotatable transport rollers adjacent the development zone, each roller having fixed magnets located therein to attract magnetic developer material to the periphery of the roller, which transports the developer from a developer sump to an elevated position and releases the material so that it cascades across the electrostatic image.

13 Claims, 5 Drawing Figures

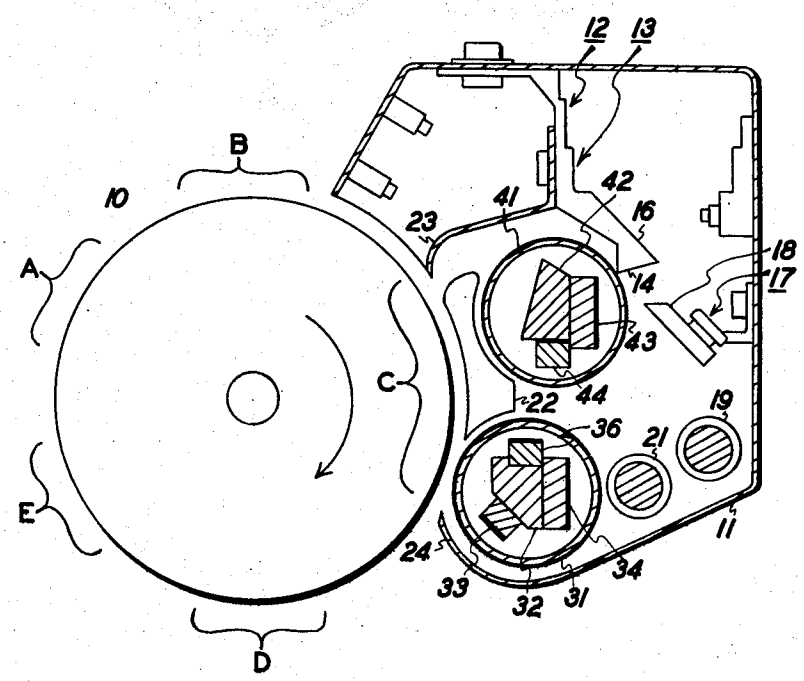

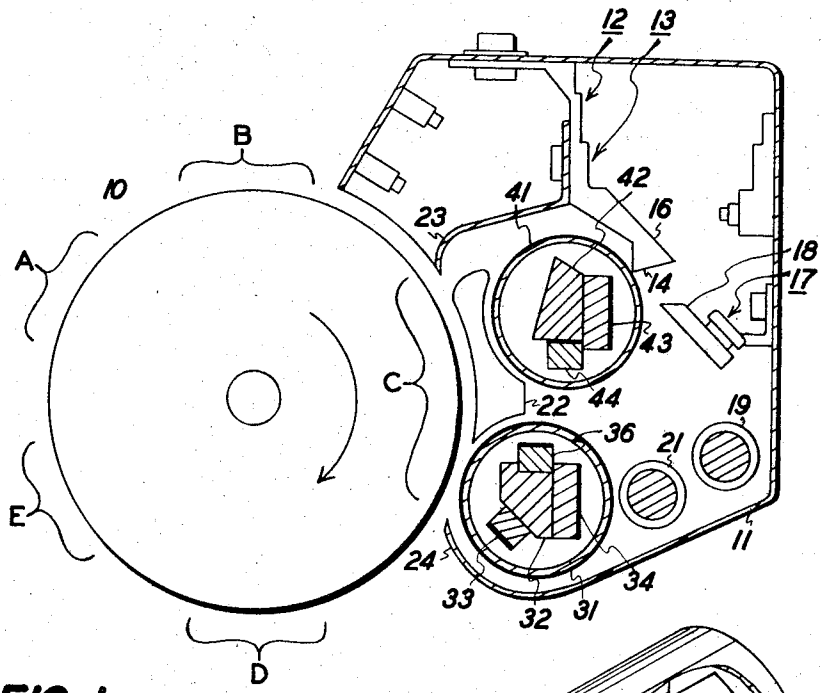

FIG. 1

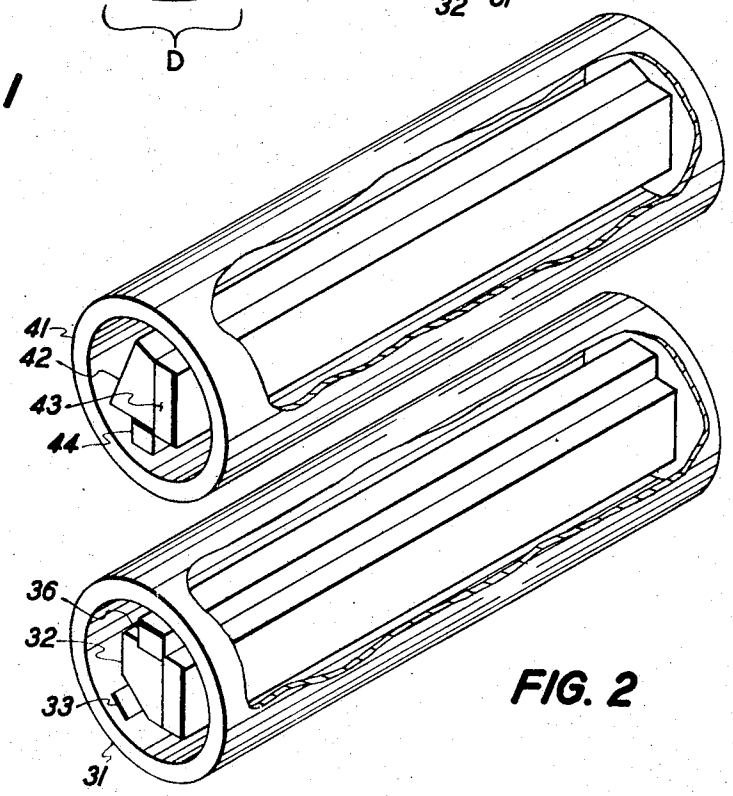

FIG. 2

INVENTOR.
JOHN T. BICKMORE

BY Laurence A. Green

ATTORNEY

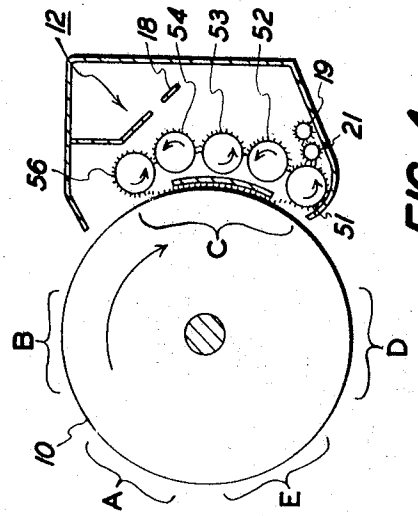

FIG. 4

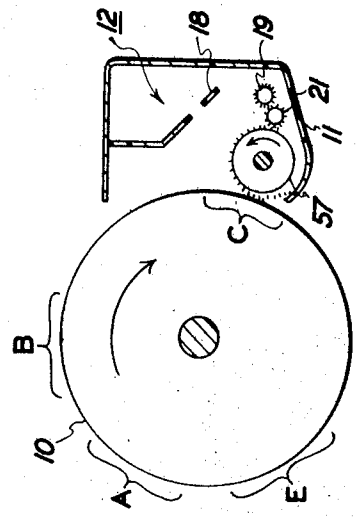

FIG. 5

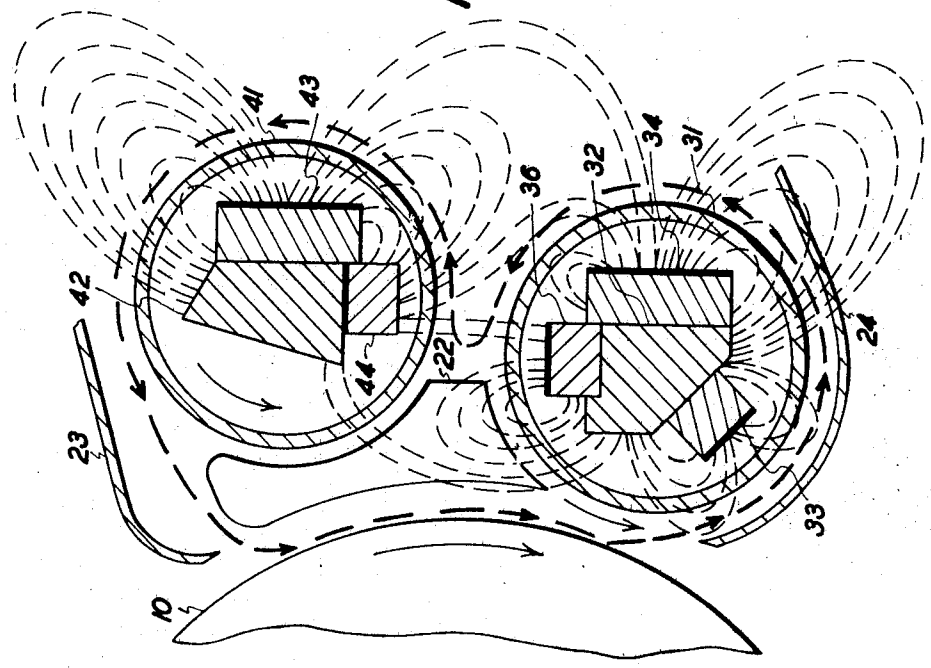

FIG. 3

DEVELOPMENT APPARATUS

BACKGROUND OF THE INVENTION

This invention relates to developing latent electrostatic images, and in particular, to an apparatus which transports magnetic developer to an elevated position adjacent an insulating surface bearing a latent electrostatic image and releases the developer to that it cascades over the surface to develop the latent image.

In reproduction systems such as those using the xerographic process, a latent electrostatic image is formed on an insulating surface and then developed, or made visible, by applying a finely divided, pigmented, resinous material called toner to the surface. The insulating surface, which can have a photoconductive layer overlying a conductive layer, is first given a uniform electrostatic charge, and then the charged surface is exposed to a light pattern conforming to the information to be reproduced. During exposure, the charge on the insulating surface is dissipated in the portions thereof which correspond to the light areas while the charge on the rest of the surface is relatively unaffected. After exposure has been completed, a pattern of electrical potentials or a latent image, remains on the insulating surface which can be developed by applying toner to the surface. As the toner comes into contact with the surface, it is attracted to the areas of the surface of higher electrical potential to produce a visible image. The toner image can then be fused to the surface or transferred electrostatically to a copy sheet or the like and then made permanent.

One known development technique by which toner can be applied to the insulating surface is cascade development. Developer, consisting of a mixture of toner particles and carrier material, which as the name implies, carries the toner in a controlled manner from place to place throughout the development housing, is brought to an elevated position adjacent the insulating surface and released so that it flows or cascades over the surface which bears the latent image. The carrier material is chosen so that it is remotely located from the toner material in the triboelectric series, and when the two are mixed, a charge is generated on each due to triboelectrification which makes it attractive to the other. The triboelectrification of the toner and carrier causes many toner particles to adhere to each carrier bead until the developer is cascaded through the development zone. The toner particles are separated from the carrier material and attracted to the insulating surface as they pass through the development zone due to the impact of the developer against the surface and the strong forces of attraction on the toner particles by the electrostatic forces on the surface. The toner particles are attracted to the insulating surface according to the electrostatic forces thereon thereby forming a toner image. After flowing through the development zone, the carrier material and any remaining toner particles are mixed with additional toner particles, raised to the elevated position, and again cascaded over the plate.

The prior art apparatus for raising developer to an elevated position over a development zone are characterized generally by conveyor mechanism which are bulky and contain a great many moving parts. For example, one device used for this purpose includes an endless belt which extends from the developer sump at the bottom of the development housing to an elevated position on the insulating surface. The belt contains a plurality of bucketlike scoops which are filled with developer as they pass through the sump and then carry the developer to the elevated position as the belt rotates around its support rollers. As a given scoop filled with developer reaches the elevated position, it moves with the belt around the uppermost support roller and dumps the developer onto the insulating surface. The scoop then moves through the sump again to pick up another load of developer.

The type of apparatus described above has a number of drawbacks. Because of the nature of the system; that is, first filling and then emptying a plurality of scoops, the device does

not operate efficiently at very high speeds since there is a tendency for the toner to escape the scoops and fly about the sump as the scoops pass quickly through the developer in the sump. This disadvantage is particularly acute in high-speed copier systems that require a large flow of developer to adequately develop a fast and continuously moving insulating surface. In addition to being restricted to lower speeds, the scoop apparatus inherently generates an intermittent flow of developer across the insulating surface. The intermittent nature of the flow can be reduced somewhat by placing the scoops very close together, but it cannot be eliminated since adjacent scoops must necessarily have some space between them in order to be loaded with developer as they pass through the sump. The evenness of the flow of developer as viewed across the insulating surface is also less than uniform when a scoop arrangement is used to convey the developer to the elevated position. The level of the developer in each scoop cannot be made uniform across the scoop in a reliable manner, and it is possible that one portion of the scoop may be filled to the brim while a second portion contains considerable less developer. This problem is aggravated when the system is not operated on a level plane and when the belt has tracking problems which cause it to slide to one side of the sump.

The disadvantages of prior art devices are eliminated in the apparatus disclosed herein. The present device is mechanically simpler than those in the prior art and contains a minimum of moving parts. The developer is raised from the sump to the elevated position in a substantially uniform thickness so that when released it is cascaded with uniform flow all across the insulating surface. The present apparatus requires very little space in which to operate as compared to the prior art devices and can be easily adapted to a flat plate, drum, or any other shape taken by the insulating surface.

The present apparatus includes a rotatable roller, or a plurality of rollers, having fixed magnets located therein which attract developer to the roller in the vicinity of its lowermost portion and carry it to the vicinity of its uppermost portion. The developer is released from the uppermost portion of the roller and is cascaded across an insulating surface located adjacent the roller thereby developing a latent image thereon.

SUMMARY OF THE INVENTION

Accordingly it is an object of the present invention to improve apparatus for developing latent electrostatic images.

It is a further object of the present invention to improve apparatus for cascade development.

It is a further object of the present invention to improve transport apparatus for conveying developer from a sump to an elevated position for cascade development.

It is a further object of the present invention to improve cascade development apparatus by employing a simple, compact and inexpensive transport device for raising developer from the sump of a development housing to an elevated position.

It is a further object of the present invention to improve cascade development apparatus by employing a transport device that releases a continuous, uniform amount of developer across the insulating surface being developed.

According to the present invention a developer mixture comprising magnetic carrier material and toner particles is raised from a developer sump to an elevated position and cascaded over an insulating surface to develop a latent image thereon. The developer is raised to the elevated position by a rotatable roller, or a plurality of rollers arranged in a train, which includes fixed magnets therein to attract the developer to the outer surfaces. The magnets are so arranged within the rollers that the developer is attracted to the surface of the roller in its lowermost area and adheres to the surface until it reaches the uppermost area of the roller where it is released. Upon being released, the developer cascades over the insulating surface located adjacent the roller and then is attracted back onto the roller to be raised to the elevated position again.

When a plurality of rollers are used in a train the developer is passed through the train from the fist roller to the last roller before being cascaded over the insulating surface.

For a better understanding of the invention as well as other objects and further features thereof, reference is had to the following detailed description to be used in conjunction with the accompanying drawings.

BRIEF DESCRIPTION OF THE DRAWINGS

FIG. 1 is a schematic illustration of the invention in a xerographic copier.

FIG. 2 is an isometric view of the developer transport rollers showing the position of the magnets therein.

FIG. 3 is a cross section view of the development system showing the fields produced by the magnets.

FIG. 4 is a schematic illustration of a development system utilizing a plurality of transport rollers.

FIG. 5 is a schematic illustration of a development system utilizing one transport roller.

DESCRIPTION OF THE PREFERRED EMBODIMENT

The present invention is a development system in which a developer transport apparatus raises developer from a sump to an elevated position where it is released and cascaded over an insulating surface bearing a latent electrostatic image. Although the system is described herein as part of the xerographic copier, it can be utilized in conjunction with any reproduction system wherein a latent image is to be developed by applying developer material thereto.

Referring to FIG. 1, there is shown a xerographic reproduction system employing the present invention. In this system the insulating surface is in the form of drum **10** which passes through stations A through E in the direction shown by the arrow. The drum has a suitable photosensitive surface on which a latent electrostatic image can be formed such as a layer of photoconductive material overlying a layer of conductive material. The various stations about the periphery of the drum which carry out the reproduction process are charging station A, exposing station B, developing station C, transfer station D, and cleaning station E. Drum **10** first passes through charging station A where a uniform electrostatic charge is placed on the surface of the drum prior to exposing it to a light image. The charging device can be of any suitable configuration such as a corona-charging device which can be located adjacent the drum and is adapted to spray a charge on the surface of the drum.

After acquiring a uniform electrostatic charge, the surface of the drum rotates through exposing station B where a light pattern conforming to the information to be reproduced is exposed onto the charged surface of the drum. Any suitable type of exposing apparatus can be used such as the type wherein the original information-bearing member, such as a document, is placed on a transparent platen and illuminated by a lamp from its underside in successive increments. The light rays which strike the document are reflected from it, and are focused onto the drum surface by a lens which moves in synchronism with the lamp. A plate having a slit is located immediately above the drum and only enables a portion of the reflected light rays to be imaged on the drum at any given time. Since drum **10** moves continuously through exposing station B as exposure takes place, the lamp and lens move in synchronism with the movement of the surface of the drum **10** to assure that clear and distinct images are imaged on the drum. As a result of being exposed to a light image in station B, elemental areas of the surface of the drum corresponding to the light areas in the light image are dissipated in charge thereby forming a latent electrostatic image on the surface of the drum which conforms to the light image.

The latent image formed on the surface of drum **10** is developed or made visible by the application of a finely divided, pigmented, resinous powder called toner to the surface of the drum in station C. The toner particles supplied to the drum surface in station C bear a charge which, in conjunction with the electrostatic forces on the drum due to the presence of a latent image, causes the toner particles to be attracted to and adhere to the image areas of the charge pattern thereby developing the latent image. It is within this station of the xerographic machine that the invention disclosed herein is used and a more detailed description of the apparatus shown in station C is set out below.

After the drum **10** is developed at station C, it passes through transfer station D where the toner image is transferred from the surface of the drum onto a copy sheet or other suitable support material. For instance, a copy sheet can be fed onto the drum surface in station D in registration with the toner image on the drum and an electrostatic field imposed between the drum and copy sheet by a corona charging device underneath the copy sheet which effects the transfer of the toner particles to the copy sheet. The copy sheet then can be stripped from the drum surface taking the toner particles with it, and the toner particles thereon affixed to the sheet to make a permanent copy.

After the transfer of the toner image to the copy sheet has been completed, the drum rotates through station E where a suitable cleaning device removes any residue toner remaining on the surface of the drum prior to the drum passing through the charging station again. Any suitable cleaning device can be used at this station such as a brush which sweeps the residue toner particles from the surface of the drum in order to prepare the drum for a new cycle.

The xerographic system described is of the continuous, reusable type wherein the drum is rotated continuously through the various stations described above and the same insulating surface, drum **10**, is used for each cycle. However, the present invention can be used in conjunction with a xerographic copier using photosensitive paper or in a reproduction utilizing any other type of insulating surface. The various elements in the charging, exposing, transfer and cleaning stations can be of any suitable type to carry out the operation of the machine as described above and are not intended to be limited to the mechanism particularly mentioned.

The developing station C contains an apparatus which raises developer from a sump to an elevated position and then releases developer so that it cascades over the surface of drum **10** to develop the latent image thereon. The developer used by the apparatus is a mixture of toner particles which are applied to the drum surface to develop the latent image and a magnetic carrier material which provides mechanical control over the toner particles so that the toner can be readily handled and brought into contact with the drum. The toner is a finely divided, electrostatically attractable material such as a resinous powder and the carrier material can be a larger granular bead such as a magnetic core material coated with a material removed in the triboelectric series from the toner so that a triboelectric charge is generated between the toner particles and the granular carrier.

In a cascade development system, developer is cascaded or flowed across the rotating drum. As a result of contact between the developer and the drum surface, toner particles are electrostatically pulled away from the carrier material by the charged areas of the drum and are selectively deposited on the drum to form a visible toner image. The partially denuded carrier granules then move beyond the drum and back into the sump of the development housing. As toner images are formed, additional toner particles are supplied to the developer mixture in the developer housing in proportion to the amount of toner deposited on the electrostatic drum to maintain the proper amount of toner in the developer mixture at all times.

Due to magnetic forces generated from within transport rollers **31** and **41**, developer is attracted to roller **31** in the lowermost areas of housing **11**, or sump area **24**, and brought to the uppermost portion of the roller adjacent roller **41** as roller **31** rotates in the counterclockwise direction (as shown by the arrow). The developer is then attracted to the surface of roller

41 and rotates to its uppermost portion in the counterclockwise direction (as shown by the arrow). Upon reaching the vicinity of the uppermost portion of roller 41, the magnetic forces on the developer are released and the developer cascades to the left and onto the surface of the electrostatic drum 10. The developer then flows across that portion of the drum surface which is in the developing station C applying toner to the drum surface in accordance with the electrostatic charges thereon. After flowing through the development station C, the developer falls into the sump where it is mixed with the developer in the sump and is again recirculated to the elevated position by the transport rollers.

The two transport rollers 31 and 41 are positioned adjacent the development station C of the electrostatic drum 10 and are contained within housing 11. Developer in the housing tends to collect in the sump area 24 adjacent transport roller 31 due to gravity forces. During this time the developer is maintained in a loose consistency and thoroughly mixed by augers 19 and 21. As toner is used to develop a latent image on the electrostatic drum, additional toner particles are added to the sump by a toner dispenser (not shown). The toner dispenser can be located in compartment 12 and can dispense toner onto dispenser chute 16 which is part of frame 13. The toner falls down chute 16 and then onto chute 18, which is supported in the housing by frame 17. Chute 18 guides the toner into the area of the transport rollers.

As developer on roller 41 approaches the vicinity of the uppermost portion of roller 41, a portion is removed from the roller by toner dresser 14, mounted on frame 13, and recirculated to toner chute 18 and back into the area of augers 19 and 21. The remaining portion of the developer on the roller 41 remains on the roller surface due to the magnetic forces on the roller and is cascaded across the drum. The purpose of toner dresser 14, which is optional in the development housing, is twofold. Because the amount of developer that adheres to the transport rollers is generally more than an adequate amount for development of the drum, the excessive developer on the upper roller can be recirculated through developer housing to assure proper crossmixing between the toner and carrier and to keep the developer available to all sections of the housing. In addition, the toner dresser 14 tends to assure that the developer on the upper transport roller is evenly distributed and somewhat compacted on the roller surface so that it will flow uniformly across the surface of the drum when released from the roller 41. It has also been found that when the profile of the toner dresser is made in a particular shape such as a sawtooth or square-tooth shape, the developer when released from the upper roller tends to fold over itself and flow more uniformly which, of course, is desirable for proper and consistent development of all areas of the electrostatic drum.

As the developer is released from the upper transport roller 41, it is directed by guide 23 onto that portion of the electrostatic drum 10 which is currently within the developing station C. As the developer flows between the surface of the drum and a development electrode 22, which aids the deposition of the toner particles in the image areas, toner is deposited on the drum. Upon reaching the lower portion of the developing zone, the developer is attracted by transport roller 31 and either remains on the surface of the roller or is placed in the sump portion of the developer housing, depending on the strength of magnet 33.

The developer housing is mounted on the main frame of the machine and transport rollers 31 and 41 are journaled for rotation in the housing about the fixed magnets 33, 34 and 36 and 44 and 43, respectively. Augers 19 and 21 are journaled for rotation within the housing and constantly mix the developer. Both the transport rollers and augers are driven by any suitable drive means which is not shown.

A more detailed view of the location of the magnets in relation to the transport rollers is shown in FIG. 2. FIG. 2 is a schematic illustration of the two transport rollers containing their respective magnets therein. Transport roller 31 contains magnets 33, 34 and 36 which are all mounted on frame 32 which, in turn, is mounted rigidly within the housing. Likewise, transport roller 41 contains magnets 43 and 44 which are both supported by frame 42 which is also rigidly supported by the housing. Transport rollers 31 and 41 may be any suitable material which enables the magnetic forces generated by their respective magnets to attract the developer. For instance, the rollers can be made of any nonferrous magnetic material such as aluminum, which is essentially nonmagnetic. The outer surface of the rollers can be roughened to prevent developer slippage. This can be accomplished by knurling or by applying a nonmagnetic, rough coating to the roller.

The two rollers shown are placed adjacent one another, but separated by a gap across which the developer is passed from the lower roller to the upper roller. The gap between the rollers can be any distance across which the developer can be passed and is preferably from one-eighth inch to five-sixteenth inch wide. This range of gap dimensions is only intended to be indicative of the order of distances between the rollers for efficient developer transport and is not intended as a limitation. Of course, the gap permissible depends ultimately on the strength of the magnets in the transport rollers. The two transport rollers can be the same size and can be rotated at the same speed. However, it has been found that if the lower roller is rotated at a faster rate of speed than the upper roller, the pickup of developer from the drum area by the lower roller after it has cascaded across the developing station is improved greatly. It has been found that the most preferable speed ratios between the two rollers is to rotate the lower roller approximately 1.5 times the speed of the upper roller.

Magnets 33, 34 and 36 are located in their appropriate positions within transport roller 31 by a rigid support member 32 and magnets 43 and 44 are supported within roller 41 by frame 42. The frames as well as the magnets can be made from any suitable material; for instance frames 32 and 42 can be made from a material such as cold roll steel while the magnets 33, 34, 36, 44 and 43 can be made from a permanent ferrite magnetic material.

As can be seen from FIGS. 2 and 3, the magnets are placed at strategic positions to transport the developer as desired. The heavy line on each magnet in FIGS. 2 and 3 represents the north pole of the magnet. Referring to FIG. 3, there is shown diagrammatically the approximate flux patterns produced by the magnets when they are placed in the configuration shown. Magnets 33 and 34, which attract the developer to the surface of transport roller 31, have their north poles facing away from the frame, and magnet 36, which transfers the developer from the surface of transport roller 31 to the surface of transport roller 41 also has its north pole facing away from the frame 32. In transport roller 41, magnet 44, which attracts the developer to the periphery of roller 41, has its north pole facing the frame 42 while magnet 43, which retains the developer on the periphery of the upper roller until it reaches the vicinity of the uppermost portion of the roller has its north pole facing away from frame 42. It is pointed out at this juncture that the exact positions of the magnets shown in FIG. 3 are not critical in making the transport system operate as described above, and a number of other magnet positions are possible.

Due to an appropriate arrangement of the magnets; for example, as shown in FIG. 3, the flux lines produced are positioned so that developer is transported from the sump area to the uppermost portion of transport roller 41 and cascaded across the drum approximately in the configuration shown by the broken line. The developer is picked up in sump area 24 of the developer housing by transport roller 31 and remains on the periphery of roller 31 until reaching the vicinity of magnet 36. Due to the confluence of flux lines between magnets 36 and 44, the developer is transferred to the periphery of transport roller 41 and is retained thereon until it reaches the vicinity of the uppermost portion of the roller at which time it leaves the influence of the flux of magnet 43 and cascades onto electrostatic drum 10. The developer is directed by guide 23 onto the surface of the drum and flows between development electrode 22 and the surface of the drum in traditional

cascade manner. The position of the development electrode **22** also prevents any developer from flowing between the development electrode and the upper roller **41**. Such flow is undesirable since it would impair good circulation of the developer throughout the housing as well as the intended transport process.

As the developer flows through the lower portion of the developing station C, it is attracted back onto the periphery of transport roller **31** by the combined action of magnets **33** and **36**. These magnets are strong enough to attract the developer to the periphery of transport roller **31** from the bottom of the development zone as well as the sump area. As a result, developer reaching the bottom of the development zone cannot pass between the housing **11** and drum **10** to escape the developer housing. Although not shown in the figure, sump area **24** is filled with developer material and the transport roller **31** picks up developer from the sump as needed. Due to the arrangement shown in FIG. **3**, a uniform layer of developer is first attracted to the transport roller **31**, then passed onto transport roller **41** and then released into a cascading flow across the drum surface. After passing through the development zone defined by bracket C, the developer is attracted back onto roller **31**.

Since magnet **33** can attract all developer reaching the bottom of the development zone in the areas of roller **31**, there is no need for a sump in the housing. If no sump were used, additional toner can be added to the roller at any location; for instance, additional toner can be placed on the train of rollers near its uppermost position of the top roller, roller **41** in FIG. **3**. The developer is then cascaded over the surface of the drum in the development zone, attracted directly to the lower roller **31** by magnet **33** and transported to roller **41** in the fashion described above. When this is the case sump area **24** need not function as a sump and the lower portion of the housing can be placed closer to the surface of roller **31** leaving only enough space for the developer on the roller to pass unimpeded.

Although the developing stations in FIGS. **1–3** show two magnetic transport rollers, the invention is not limited to two rollers. In actuality, one roller or a plurality of rollers can be used as effectively as the two rollers shown in the first three figures. FIGS. **4** and **5** show these alternative embodiments. FIG. **4** shows five transport rollers **51**, **52**, **53**, **54** and **56** arranged in a train adjacent the development zone of drum **10**. The developer is passed from lower roller **51** to each succeeding roller in the train until it reaches the uppermost portion of the upper roller **56** at which time it is released and cascaded onto the electrostatic drum.

The developing assembly in FIG. **4**, with the exception of the greater number of rollers, has the same elements as those shown in FIGS. **1–3**. A development electrode **22** is placed adjacent the development zone between the train of transport rollers and drum, and additional toner is fed as needed into the developer housing from the toner dispenser (not shown) and across toner chute **18** onto the area of augers **19** and **21**. The entire developer assembly is contained within housing **11** and provisions can be made to dress the toner on the upper roller **56** prior to it being released for cascade by a means similar to that shown in FIG. **1**.

The employment of a plurality of rollers in a train as shown in FIG. **4** is particularly useful in high-speed reproduction systems where a long developing station is desirable in order to place adequate toner on the drum **10**. The magnetic transport roller system disclosed herein is particularly desirable in this arrangement since a plurality of rollers can be placed in a train which is adaptable to any shape of electrostatic member. For instance, in FIG. **4**, the train of rollers is aligned to approximate the shape of the drum without detrimental effect to the transport of developer from the lower roller to the upper roller in the train. The flexibility of such a developer transport system is an asset especially when a variety of plate configurations are used. Each of the transport rollers **51–56** contains permanent magnets similar to those described in conjunction with FIG. **1–3** which are placed within the rollers so that the developer is passed from the lower roller to each succeeding roller until it reaches the uppermost position of the upper roller where it is released.

FIG. **5** shows an electrostatic drum **10** being developed by a single transport roller **57**. By placing permanent magnets within the transport roller in the configuration to cause the developer to flow as shown in the figure, only one transport roller is necessary to develop a latent image on drum **10**. The other elements of the developing assembly as described in conjunction with FIGS. **1–4** can be adapted to a single magnetic roller developing assembly as shown in FIG. **5**. Of course, due to the very nature of a one transport roller system, developer is not passed from roller to roller as shown in FIGS. **1–4**, but, instead, is picked up by the single roller and brought to its uppermost position where it is released and cascaded over the drum. One limitation of the one roller system shown in FIG. **5** is that unless a vary large diameter transport roller is used little elevation is gained from the system. However, the system has the advantage that it is much simpler in operation and cheaper than a system using a plurality of rollers and has particular applicability to a slow speed copying system.

In addition to the apparatus outline above, many modifications and/or additions to this invention will be readily apparent to those skilled in the art upon reading this disclosure, and these are intended to be encompassed within the invention disclosed and claimed herein.

I claim:

1. In an apparatus for developing electrostatic images on an insulating surface in which magnetically attractable developer material is cascaded from an elevated position in a developer housing over the surface to be developed and into a sump, a conveyor arrangement for transporting the developer material from the sump to the elevated position and for discharging the transported developer into cascading relationship with the surface to be developed including,

a plurality of generally cylindrical members supported for rotation within said housing, at least one of said cylindrical members being in operative relation to said sump for engaging developer material within said sump and another of said cylindrical members being spaced therefrom at an elevated position from said sump,

magnetic-field-producing means supported within said cylindrical members for attracting developer material to the surface thereof, the respective fields from said magnetic field producing means overlapping between adjacent pairs of said cylindrical members and forming a field pattern for attracting developer material from a cylindrical member at a lower elevation to a cylindrical member at a higher elevation, and

means for rotating said cylindrical members to transport developer material magnetically adhering to the surfaces thereof upwardly from said sump about said cylindrical members into the overlapping magnetic fields between adjacent pairs of said cylindrical members and onto the uppermost cylindrical member for discharge at the elevated position onto the surface to be developed.

2. Apparatus according to claim **1**, said magnetic field producing means comprising stationary bar magnets extending substantially parallel to the axis of the respective roller members to produce substantially uniform magnetic fields in the longitudinal direction along the surface of said roller members.

3. Apparatus according to claim **1** further including, developer dressing means positioned adjacent the surface of at least one of the roller members for removing portions of the developer material attracted to the surface thereof to maintain a uniform quantity of developer material which is cascaded across the surface to be developed.

4. In an apparatus for developing electrostatic images on an insulating surface in which magnetically attractable developer material is cascaded from an elevated position over the surface to be developed and into a sump, a conveyor arrange-

ment for transporting the developer material from the sump to the elevated position and for discharging the transported developer into cascading relationship with the surface to be developed including,

a first generally cylindrical member supported for rotation in operative relation to said sump for engaging developer material within said sump,

a plurality of generally cylindrical members spaced from said first cylindrical member and supported for rotation at elevated positions from said sump,

magnetic field producing means supported within said cylindrical members for attracting developer material to the surfaces thereof, the respective fields from said magnetic field producing means overlapping between adjacent pairs of said cylindrical members to form a field pattern for attracting developer material from a cylindrical member at a lower elevation to a cylindrical member at a higher elevation,

means for rotating said cylindrical members to transport developer material magnetically adhering to the surface thereof upwardly from said sump about said cylindrical members into the overlapping magnetic fields between adjacent pairs of said cylindrical members and onto the uppermost cylindrical member for discharge at the elevated position onto the surface to be developed.

5. Apparatus according to claim 4, said magnetic field producing means comprising stationary bar magnets extending substantially parallel to the axis of the respective roller members to produce substantially uniform magnetic fields in the longitudinal direction along the surfaces of said roller members.

6. Apparatus according to claim 4 further including, developer-dressing means positioned adjacent the surface of at least one of the roller members for removing portions of the developer material attracted to the surface thereof to maintain a uniform quantity of developer material which is cascaded across the surface to be developed.

7. In an apparatus for developing electrostatic images on an insulating surface in which magnetically attractable developer material is cascaded from an elevated position over the surface to be developed and into a sump, a conveyor arrangement for transporting the developer material from the sump to the elevated position and for discharging the transported developer into cascading relationship with the surface to be developed including,

a first generally cylindrical member supported for rotation in operative relation to said sump for engaging developer material within said sump,

a second generally cylindrical member spaced from said first cylindrical member and supported for rotation at an elevated position from said sump,

first magnetic field producing means supported within said first cylindrical member for attracting developer material within said sump to the surface of said cylindrical member,

second magnetic field producing means supported within said second cylindrical member for attracting developer material to the surface of said second cylindrical member, the respective fields from said first and said second magnetic field producing means overlapping between said first and said second cylindrical members and forming a field pattern for attracting developer material from said first cylindrical member to said second cylindrical member,

means for rotating said first cylindrical member to transport developer material magnetically adhering to the surface thereof upwardly into the overlapping magnetic fields between said first and said second magnetic field producing means and onto said second cylindrical member, and

means for rotating said second cylindrical member to transport developer material upwardly from said first cylindrical member to an elevated position for discharge onto the surface to be developed.

8. Apparatus according to claim 7, said magnetic field producing means comprising stationary bar magnets extending substantially parallel to the axis of the respective roller members to produce substantially uniform magnetic fields in the longitudinal direction along the surfaces of said roller members.

9. Apparatus according to claim 8 further including, developer dressing means positioned adjacent the surface of at least one of the roller members for removing portions of the developer material attracted to the surface thereof to maintain a uniform quantity of developer material which is cascaded across the surface to be developed.

10. Apparatus according to claim 9, said first and second roller members having a space therebetween of about one-eighth inch to five-sixteenth inch.

11. Apparatus according to claim 9, said first and second roller members having substantially the same diameter and being rotated at substantially the same speed.

12. Apparatus according to claim 9, said first and second roller members having substantially the same diameter and said first roller member being rotated at a speed substantially greater than the speed of rotation of said second roller member.

13. Apparatus according to claim 9, said first roller member being rotated at a speed of approximately 1.5 times the speed at which said second roller member is rotated.

* * * * *