Jan. 13, 1959 H. D. SQUIRE 2,867,839

DOOR HINGE

Filed Oct. 17, 1957

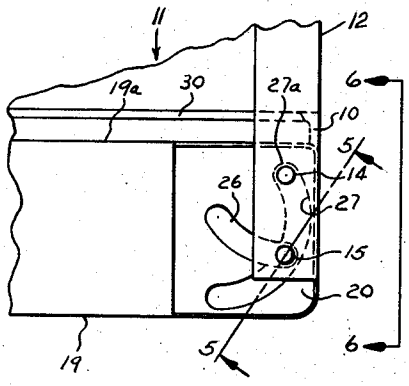

FIG. 1

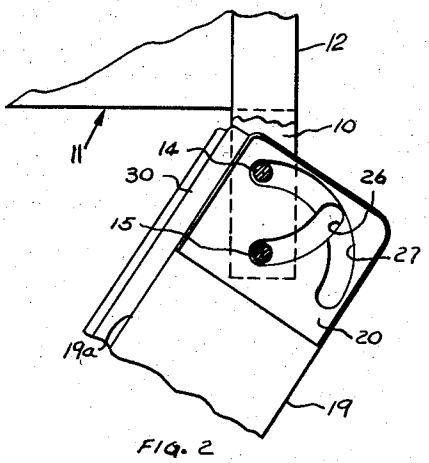

FIG. 2

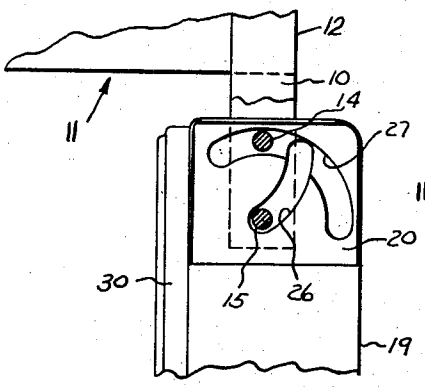

FIG. 3

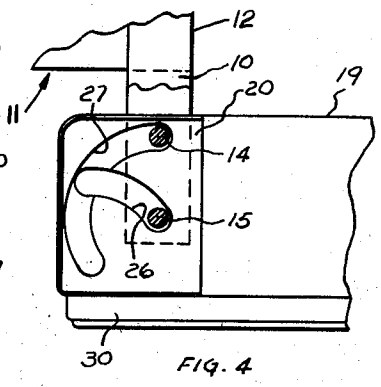

FIG. 4

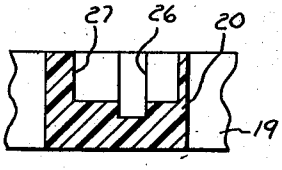

FIG. 5

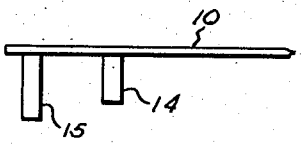

FIG. 6

INVENTOR.
HERBERT D. SQUIRE

BY J. D. Douglass
His atty

United States Patent Office

2,867,839

Patented Jan. 13, 1959

1

2,867,839

DOOR HINGE

Herbert D. Squire, Galesburg, Ill., assignor to Midwest Manufacturing Corporation, Galesburg, Ill.

Application October 17, 1957, Serial No. 690,765

5 Claims. (Cl. 16—166)

This invention relates to cabinet door construction and more particularly to an improved hinge construction for attaching a door to a cabinet.

In conjunction with certain types of cabinets, particularly those wherein the door is of considerable thickness, such as refrigerators, it is frequently desirable that the door open in such a manner that when in open position the door does not extend unduly far beyond the side of the cabinet and when in full open position does not extend back of the forward edge of the side wall of the cabinet. Although doors may be made whereby they do not extend back of the forward edge of the cabinet side wall, these doors have the disadvantage that the sealing gasket is subjected to a severe wiping action that causes undue wear and distortion. In conventional refrigerator door hinges, where the door is hingedly secured to the front corner of the cabinet, when the door is open it normally extends beyond the side of the cabinet by an amount equal to the thickness of the door.

In certain places where the refrigerator is so placed in a room that has a wall of the room abutting the side wall of the refrigerator, this makes it impossible to open the door to a full 90° position, and more particularly when the cabinetry of the kitchen comes flush with the forward side edge of the door, the door cannot be opened 180°.

It is also desirable in some instances to provide a hinge construction that is completely hidden.

By the present invention I am able to provide an improved hinge construction wherein the door may be supported in such a manner that in the open position it does not project back of the front edge of the side wall of the cabinet.

Another advantage of the invention resides in the fact that it need not be attached to the side wall of the cabinet, thus making it unnecessary to reinforce the cabinet at those points where the hinge leaves are ordinarily attached.

Still another advantage of the invention resides in the fact that the hinge is substantially hidden and not visible, as in the ordinary hinge.

Still other advantages of the invention and the invention itself will become more apparent from the following description of an embodiment thereof which is illustrated by the accompanying drawings which form a part of the specification.

In the drawings:

Fig. 1 is a fragmentary top plan view of a corner of a refrigerator cabinet and door showing the hinge of my invention in use with the door being illustrated in a closed position;

Fig. 2 is a similar view with the door in a partly open position;

Fig. 3 is a view with the door open 90°;

Fig. 4 is a view showing the door fully moved to a completely open position;

Fig. 5 is a fragmentary section taken on the line 5—5 of Fig. 1; and

2

Fig. 6 is a view of an upper hinge support as viewed from the line 6—6 of Fig. 1.

Briefly the invention contemplates a hinge wherein, upon opening of the door, it partakes of a compound movement such that the door first swings outward on a pivot close to the front of the cabinet to a partially open position and then, upon further opening of the door, pivots about a pivot further forward from the cabinet, so that the part of the door near the cabinet moves in inwardly of the side wall as the remainder of the door swings outward.

More particularly, the hinge includes spaced brackets or supports carried by the cabinet which have hinge pins therein that are engaged with guide blocks carried by the door. As viewed in Fig. 1, the supports may be bars **10** of metal, one of which is mounted on the upper end of the cabinet **11**, preferably at the top of the door, spaced from the cabinet side wall **12**. The supports may be secured on the cabinet in any suitable manner. Each support is provided with two pivot pins **14** and **15**, the pivot pin **14** being shorter than the pin **15** and being closer to the front of the cabinet.

A similar bar is mounted on the cabinet, preferably at the bottom of the door, and may be identical with the top support, except that in the top support the pins extend downward and in the bottom support the pins extend upward.

As will later more clearly appear the bottom support should be made of sufficiently heavy material that the weight of the door may be carried thereby. It will also be apparent that neither one of the supports necessarily need be bar, as depicted, but can be any kind of a support sufficiently strong to bear the weight of the door and carry the pins. As a matter of fact, the bottom support could well be an outwardly extending ledge integral with the cabinet and the pins upright members secured thereto in a rigid manner.

The pins could also be removable for installation purposes. I also contemplate that, particularly in the lighter type doors, since the top support does not ordinarily carry the same amount of load, particularly shear load, the top support could be of a springy material allowing the support and pins to be moved upward normally, which would greatly assist in the assembly of the door to the cabinet.

The door proper **19** is provided, preferably at the top and bottom ends, with guide members having guideways for sliding engagement with the pins. As viewed in the figures, these guide members may comprise blocks **20** that are preferably seated in recesses in the top and bottom of the door so that the top of the block is flush with the remainder of the door, as shown in Fig. 5. The blocks may be made of metal but I have found that a plastic material, such as "Nylon," provides a most satisfactory material since it is tough, wear resistant and quiet in operation. The blocks may be secured in the recesses in any suitable manner.

Each block is provided with a pair of guideways and each guideway of the pair cooperates with one of the pins. The guideway **26** which receives the outer and longer pin **15** is arcuate, with a radius which revolves about the normally inward end **27***a* of the longer guideway **27** (Fig. 1). It extends from the edge of the door inwardly and is deeper than the guideway **27** to accommodate the longer pin **15**.

The longer guideway **27** extends from close to the outer face of the door to a point close to the inner face of the door, is also arcuate, intersects the guideway **26** and is generated by a radius one end of which is located at the end of the guideway **26** remote from the point of intersection. It is shallower than the guideway **26** and receives the pin **14**.

By referring to Figs. 1 and 2, it will be seen that the placement of the pins and guides is such that the inner face **19***a* of the door is spaced from the front face of the cabinet, and a door gasket **30** is carried by the door to provide a resilient seal with the cabinet when the door is closed.

The operation will best be understood by viewing the figures in sequence, starting with Fig. 1 wherein the door is closed. At this time the pin **14** is in the normally inward end **27***a* of the recess **27** and the pin **15** is in the end of the recess **26** nearest the edge of the door. As the door is opened, the entire door pivots about the pin **14** and the guide **26** allows the door to swing outwardly until the pin **15** engages with the end wall of the recess **26** remote from the edge of the door, as shown in Fig. 2. The pivot point for the door now shifts from the pin **14** to the pin **15** so that the hinge edge of the door now swings inwardly as the outer edge swings outwardly, the guideway **27** allowing free passage of the door past the pin **14**.

At the point where the door is at right angles to the front of the cabinet (Fig. 3) it will be noted that the pin has only traversed part of the guideway **27**. In this position however, the outer face of the door is positioned inwardly from where it would be with a conventional hinge construction. Thus, should the side of the refrigerator be disposed close to a wall, the door could be opened without interference therewith.

It will be appreciated that, should it be desired to have the door stop in this position, the guideway could terminate at the place where the pin is positioned in Fig. 3. I prefer however to make this guideway longer in order that the door may be swung a full 180°, as shown in Fig. 4.

When the door is closed the pin **15** acts as the pivot point and the door is swung from the Fig. 4 position until it reaches the position shown in Fig. 2. The pivot then shifts to the pin **14** and the pin **15** now traverses the slot **26** until ultimately the door reaches the closed position shown in Fig. 1.

It will be apparent that the size of the guideways and pins is largely determined by the size and weight of the door, and that considerably narrower guideways and smaller pins may be used where the door is smaller and lighter. It will also be apparent that more than two such assemblies may be used for each door and that it is not essential that they be placed at the top and bottom, although in a refrigerator the top and bottom provide the best support and the most concealment.

It is also apparent, as viewed in Fig. 4, that in the full

open position the door is forward of the front edge of the side wall of the refrigerator cabinet and that therefore it is particularly useful in custom installation where the other cabinetry may be flush with the front edge of this side wall since it allows full opening of the door. It is also important to note that because of the compound action considerably less wiping action on the gasket occurs than with the other type of hinge where the door is mounted to open fully in front of the cabinetry.

Having thus described my invention I am aware that numerous and extensive departures may be made therefrom without departure from the spirit of the invention as defined by the appended claims.

I claim:

1. A hinge construction for supporting a refrigerator door opposite to a door opening in a cabinet comprising a pair of support members carried by the cabinet on one side thereof and spaced from each other and extending forwardly of the cabinet, each of said support members having a first hinge pin near the cabinet and a second hinge pin spaced outwardly therefrom, said door being formed with guide members for engagement with said hinge pins, each guide member when the door is closed comprising a first arcuate guideway extending concentric to said first hinge pin and receiving said second hinge pin and a second arcuate guideway for receiving said first hinge pin extending concentric to one end of the first guideway.

2. An apparatus as described in claim 1, wherein said second hinge pin is longer than the first hinge pin.

3. A device as described in claim 2, wherein the first guideway extends from the second guideway inwardly away from the edge of the door.

4. A device as described in claim 1, wherein the second guideway extends from the front toward the back of the door with a point intermediate its ends being toward the edge of the door and the first guideway intersects and extends from the second guideway inwardly away from the door edge.

5. A device as described in claim 1, wherein the respective hinge pins on the separate support members extend toward each other.

References Cited in the file of this patent

UNITED STATES PATENTS

1,075,130 Streberger ---------- Oct. 7, 1913

FOREIGN PATENTS

499,473 Belgium ---------- Dec. 15, 1950