Oct. 20, 1936. L. C. DOANE 2,058,139

INDIRECT LIGHTING LUMINAIR

Filed Dec. 30, 1935

Fig. 2.

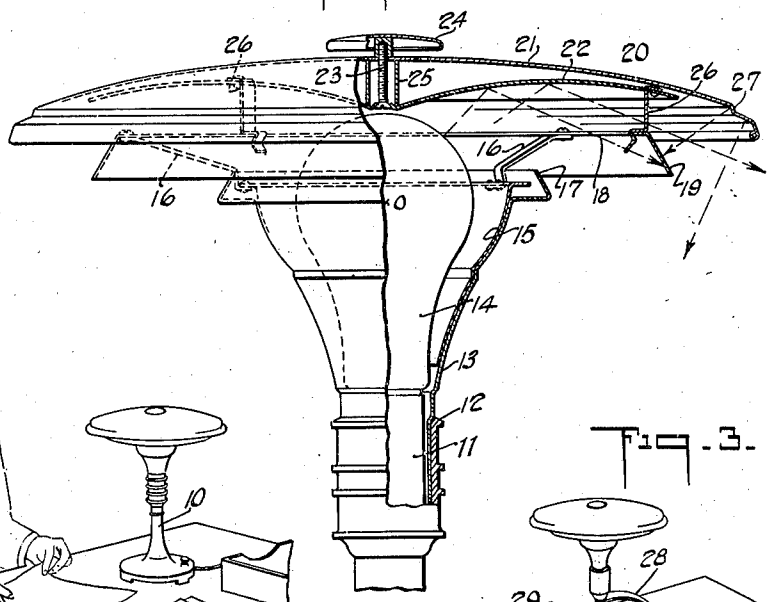

Fig. 1.

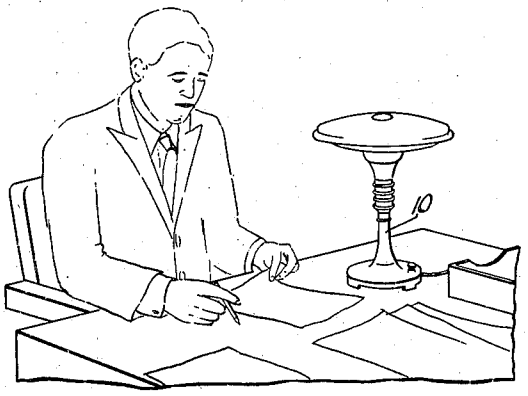

Fig. 3.

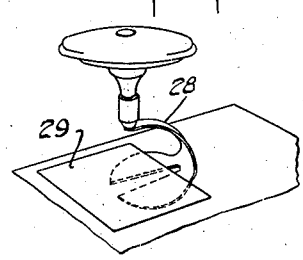

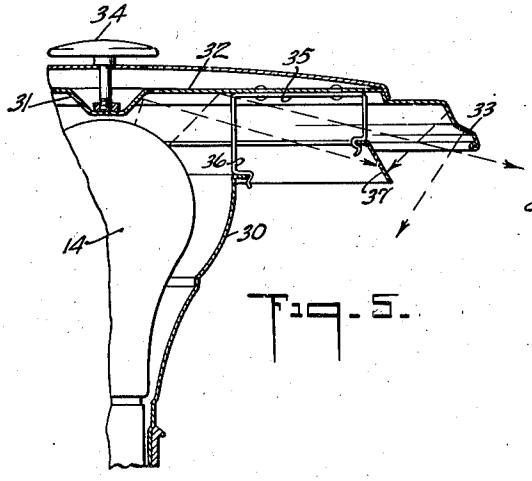

Fig. 5.

Fig. 4.

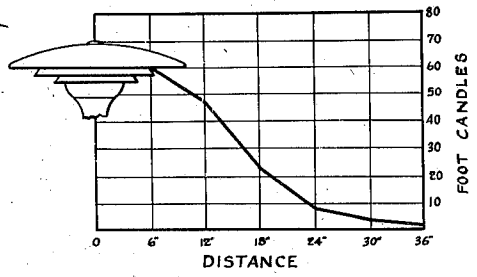

INVENTOR
Leroy C. Doane.
BY
Joel Shiberman
ATTORNEY

Patented Oct. 20, 1936 2,058,139

UNITED STATES PATENT OFFICE

2,058,139

INDIRECT LIGHTING LUMINAIR

Leroy C. Doane, Meriden, Conn., assignor to Earl L. Canfield, Hillside, N. J.

Application December 30, 1935, Serial No. 56,677

15 Claims. (Cl. 240—81)

The present invention relates to indirect lighting luminairs, and is more particularly directed toward luminairs for use below the normal eye level, and for furnishing illumination in addition to general illumination provided either from natural light or other lighting appliances.

According to the present invention, the luminair is arranged so as to be entirely below the normal level of the eye, and is arranged for illuminating a working plane, such as a desk or table, below the level of the luminair. It employs a light source such as an incandescent electric lamp bulb, and has an arrangement of opaque reflectors and screens so arranged that escape of direct light is prevented and all the reflected light is placed on the working plane in a region sufficiently close to nadir to provide intense lighting on the working plane.

The present invention more particularly contemplates a desk lamp employing a single, upwardly extending lamp bulb and an arrangement of annular reflectors and screens for controlling and redirecting the light. It is adapted to be placed on the desk near the work, and to shed a soft, well-diffused but intense light over the area of the desk so that the worker is relieved from eye-fatigue.

The accompanying drawing shows, for purposes of illustrating the present invention, several embodiments in which the invention may take form, it being understood that the drawings are illustrative of the invention rather than limiting the same.

In the drawing—

Fig. 1 is a perspective view illustrating the placing of a desk lighting luminair on a desk;

Fig. 2 is a vertical sectional view with parts in elevation showing the construction and control of light rays;

Fig. 3 is a perspective view illustrating a modified form of construction;

Fig. 4 is a plot showing the intensity of light produced on a working plane by a luminair such as shown in Figs. 1–4; and

Fig. 5 is a sectional view through a modified form of construction.

Reference to the drawing will show that the luminair is much lower than lamps ordinarily designed for desk lighting. The top of the lamp is considerably below the normal eye level of a person sitting at a desk. The top of the unit is opaque so that no direct light will be directed toward the worker's eyes.

In the form shown in Fig. 1, the base 10 of the lamp is of any appropriate design. The upper part of this base carries a lamp socket 11 and has a spaced socket-forming wall 12 to receive a sheet metal stamping 13. This stamping extends upwardly and outwardly from the top of the base and may be spaced from the lamp bulb 14, as shown. The stamping 13 is bowl-shaped and preferably receives a bowl-shaped aluminum reflector 15. The reflector extends slightly above the center of the lamp bulb and acts on all downwardly directed light (except that diffused from the highly luminous upper part of the bulb) and reflects that light upwardly. The upper edge of the reflector 15 is provided with three outwardly extending straps 16 which pass above the upper edge 17 of the stamping 13 and are secured to the flange 18 of a screening ring 19. This ring flares downwardly and outwardly as shown, and its lower edge extends below the upper edge 17 of the stamping 13.

A two-part cover 20 is supported above the lamp. This cover as here shown comprises an upper convex stamping 21 and an inner reflector 22 preferably made of aluminum and being downwardly concave from underneath and annular with respect to the lamp axis. The stampings 21 and 22 are held together by a screw 23 entering an ornamental cap 24. A sleeve 25 spaces the centers of the parts 21 and 22. The reflector 22 is secured to three spring clips 26 adapted to releasably engage the flange 18 and thereby support the superposed parts.

As the exposed parts of the luminair are opaque, it is obvious that the escape of direct light is prevented, and hence the user is unable to see the source.

Most of the upwardly directed light strikes the reflector 22 and is reflected by it downwardly and outwardly, passing between the upper screen 19 and the lower or screening portion 27 of the cover member 21. This light passes out at comparatively wide angles so as to effectively illuminate the more remote parts of the working plane. Other reflected light from the upper reflector and direct light from the upper part of the bulb falls on the inner surface of the ring 19. This surface, as well as the inner surface of the outer part of the cover stamping 21, are diffusely reflecting and act to build up the intensity of the light adjacent the luminair.

Owing to the position and size of the screen 19, it acts to prevent observation of the bright inner portion of the reflector 22 by one who happens to be seated low enough to have the eye below the lower edge of the cover stamping. Hence the luminair will cause no annoying glare to persons

seated so low as to bring the eye below the level from which the cover screens the source.

Owing to the closeness of the upper reflector to the light source, and the diffuse reflecting nature of the upper reflector, as well as the peripheral portions of the cover, the luminair produces excellent diffusion in horizontal planes. Light emanating from the bulb, which is some distance from the axis of the unit, is reflected from the upper reflector in planes at a considerable angle to the radial plane, and toward an object at considerable angles to the radial plane through that object.

In the form of construction shown in Fig. 3, the base 28 of the lamp is designed to permit sliding it under a pad, blotter or the like, indicated at 29. In this manner the work may be brought up very close to the lamp and space on the desk may be more advantageously employed for certain kinds of work.

Fig. 4 illustrates a plot of the units of light effective on a desk at various distances from the axis of the lamp, the source being a 100 watt lamp bulb at rated voltage.

In the arrangement shown in Fig. 5, the lower reflector 30 is supported directly from the base and it supports the parts above the lamp bulb. Here the upper reflector is in two portions, one designated 31, being comparatively steep and the other 32 substantially flat. The same sheet metal member which forms the upper reflector is extended outwardly and downwardly to form a screen 33. An ornamental cover 34 is secured above the central part of the reflector forming stamping. Straps 35 are secured to the reflector forming stamping and have spring clips 36 to engage the edge or lip of the lower reflector. These straps are also secured permanently or detachably to a screening ring 37 to support it in place. The light control is substantially the same as above discussed, the distribution from the flat artificial ceiling not being quite as good.

It will of course be understood that the present luminair may be carried on other forms of mountings, such as swinging brackets, to permit its use over drafting tables and the like; also, that it can be designed to use horizontally extending tubular light sources, in which event the reflectors will be rectilinear instead of annular. Such luminair would be well adapted for certain forms of counter lighting.

It is obvious that the invention may be embodied in many forms and constructions within the scope of the claims, and I wish it to be understood that the particular forms shown are but a few of the many forms. Various modifications and changes being possible, I do not otherwise limit myself in any way with respect thereto.

What is claimed is:

1. An indirect lighting luminair for use below the normal eye level and for illuminating a working plane below the luminair, comprising a light source including a luminous bulb, an opaque reflector extending upwardly from a point closely adjacent the source and outwardly to act on all the upwardly directed light emitted within wide angles from zenith to reflect it outwardly and downwardly toward said working plane, an opaque reflector below the source for reflecting light on the upper reflector, and spaced screens intercepting light emitted from the bulb between the reflectors and reflecting it toward nadir, light reflected outwardly by the upper reflector escaping between the screens.

2. A luminair as claimed in claim 1, wherein the first reflector is of downwardly concave cross-section to confine the spread of the reflected light.

3. A luminair as claimed in claim 1, having supporting means intermediate the two reflectors whereby the upper reflector can be detached to afford access to the lamp bulb.

4. An indirect lighting luminair for use below the normal eye level and for illuminating a working plane below the luminair, comprising a light source including a luminous bulb, an annular opaque reflector extending upwardly from a point closely adjacent the source and outwardly to act on all the upwardly directed light emitted within wide angles from zenith to reflect it outwardly and downwardly toward said working plane, an annular opaque reflector below the source for reflecting light onto the upper reflector, and spaced annular screens intercepting light emitted from the bulb between the reflectors and deflecting it toward nadir, light reflected outwardly by the upper reflector escaping between the screens.

5. An indirect lighting luminair having an overall height insufficient to bring it to the normal eye level and comprising a standard, an upwardly opening lamp socket carried thereby, a luminous lamp bulb therein, an opaque cover closely adjacent the source whereby the source is screened against observation at the normal eye level, spaced screens below the cover and of less diameter than the cover for intercepting light emitted by the bulb at angles below the cover, a bowl shaped reflector below the bulb for reflecting light upwardly, and a light redirecting medium between the lamp bulb and cover for projecting light outwardly and downwardly between the cover and screens.

6. A luminair as claimed in claim 5, wherein the upper reflecting medium comprises an opaque annular reflector of downwardly concave cross section and extending upwardly and outwardly from the tip of the lamp bulb.

7. A luminair as claimed in claim 5, wherein the outer portion of the cover and the adjacent screen are downwardly and outwardly flaring so as to reflect light intercepted thereby toward the lamp axis.

8. A luminair as claimed in claim 5, wherein the lower reflector supports the upper light redirecting medium and screens.

9. A desk lighting luminair having an upwardly opening lamp socket, an upwardly opening annular opaque reflector, a luminous lamp bulb in the socket, the light center of the bulb being substantially in the plane of the upper edge of the reflector so that the upper end of the bulb projects beyond the reflector, an annular opaque reflector extending upwardly and outwardly from adjacent the tip of the bulb to intercept a wide cone of upwardly directed light and reflect it downwardly and away from the lamp axis for desk lighting, and spaced annular screens intercepting direct light emitted between the reflectors and concealing the upper part of the bulb from direct observation, light reflected outwardly by the upper reflector escaping between the screens.

10. A luminair as claimed in claim 9, wherein the screens have diffusely reflecting lower surfaces which intercept light emitted from the bulb and scattered reflected light and reflect it toward the base of the lamp.

11. A luminair as claimed in claim 9, wherein the outer screen is of larger diameter than the upper reflector and extends downwardly there-

from, and the adjacent screen is of substantially the same diameter as the upper reflector.

12. A desk lamp having an upwardly opening lamp socket, a luminous lamp bulb therein, an upwardly opening bulb receiver, an upwardly opening annular reflector resting in the bulb receiver, a second annular opaque reflector having its center closely adjacent the tip of the lamp bulb and provided with a downwardly concave surface for intercepting a wide cone of downwardly directed light and reflecting it downwardly away from the lamp axis for desk lighting, means to support the second reflector from the first reflector, and spaced screens intercepting light emitted from the bulb between the top of the first reflector and the periphery of the second reflector, light reflected outwardly by the upper reflector escaping between the screens.

13. A desk lamp having an upwardly opening lamp socket, an upwardly opening annular opaque reflector, a luminous lamp bulb in the socket, the light center of the bulb being substantially in the plane of the upper edge of the reflector so that the upper end of the bulb projects beyond the reflector, a downwardly acting annular opaque reflector extending upwardly and outwardly from adjacent the tip of the bulb to intercept a wide cone of upwardly directed light and reflect it downwardly and away from the lamp axis for desk lighting, and spaced annular screens intercepting light emitted by the bulb between the reflectors and concealing the upper part of the bulb from direct observation, the outer screen extending below the level of the tip of the lamp bulb, the next adjacent screen intercepting light below that intercepted by the outer screen.

14. A desk lamp having an upwardly opening lamp socket, an upwardly opening annular opaque reflector, a luminous lamp bulb in the socket, the light center of the bulb being substantially in the plane of the upper edge of the reflector so that the upper end of the bulb projects beyond the reflector, a narrow annular screen of substantially larger diameter than the reflector and supported above the reflector to intercept light emitted at low angles above the horizontal, a downwardly acting annular opaque reflector supported from the screen and having its center closely adjacent the tip of the lamp bulb whereby a wide cone of upwardly directed light is reflected outwardly and downwardly, some of which is intercepted by the said screen, and an outer screen supported from the upper reflector and intercepting light emitted by the bulb above the first screen.

15. A desk lighting luminair comprising a luminous lamp bulb carried in an upwardly opening lamp socket, a reflecting bowl, a plurality of outwardly extending members carried by the bowl, a downwardly and outwardly flaring narrow ring carried by the strips, an annular downwardly concave reflector carried by the ring with its center adjacent the top of the bulb and its periphery spaced above the ring, and a cover above the upper reflector and having an edge of larger diameter than the ring and extending down to substantially the level of the ring, the periphery of the cover and the ring screening light not interrupted by the reflectors, and allowing the escape of light reflected by the upper reflector.

LEROY C. DOANE.