C. C. LEFTWICH.

COALING DEVICE.

APPLICATION FILED JUNE 7, 1911.

1,040,703.

Patented Oct. 8, 1912.

3 SHEETS—SHEET 1.

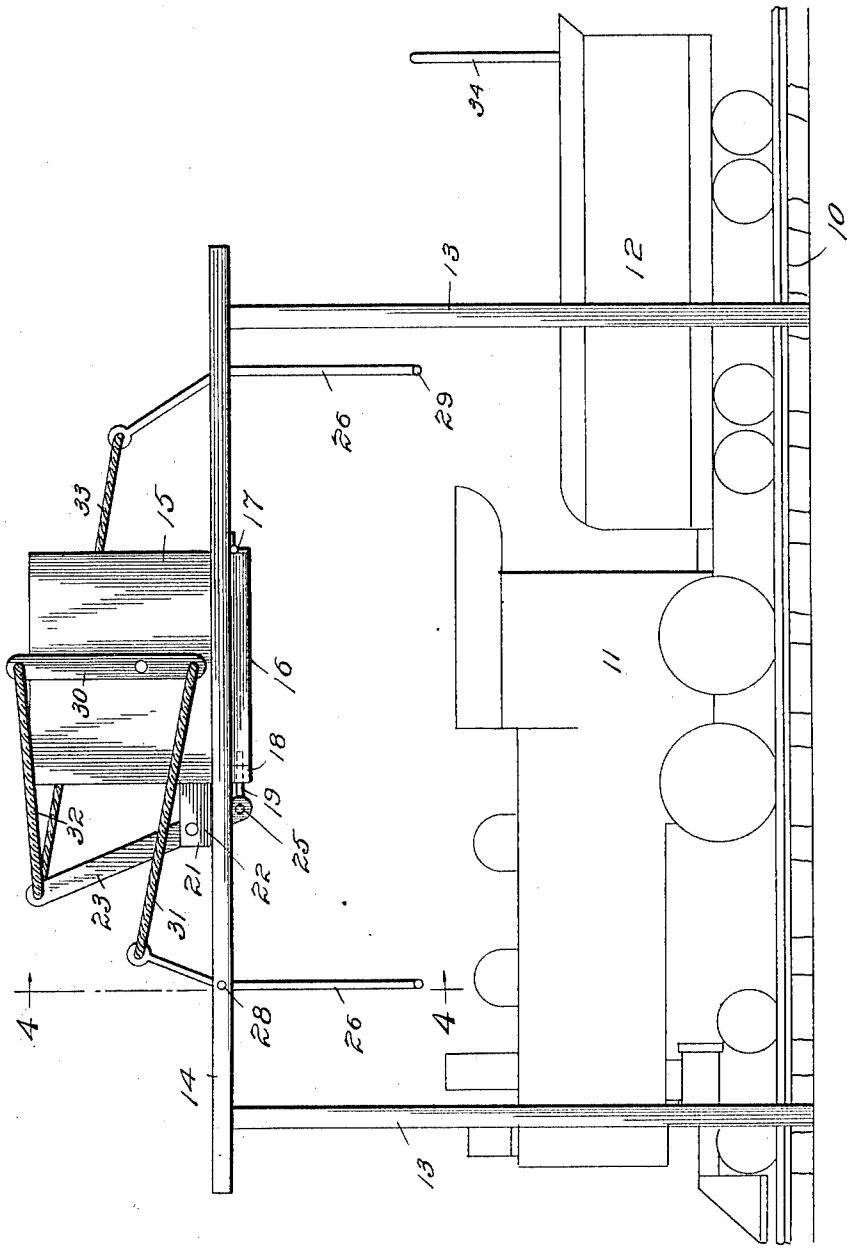

Fig. 1.

Inventor

Clifford C. Leftwich

Witnesses

E. C. Duffy

F. O. Pawlew.

By Victor J. Evans

Attorney

COLUMBIA PLANOGRAPH CO., WASHINGTON, D. C.

C. C. LEFTWICH.

COALING DEVICE.

APPLICATION FILED JUNE 7, 1911.

1,040,703.

Patented Oct. 8, 1912.

3 SHEETS—SHEET 2.

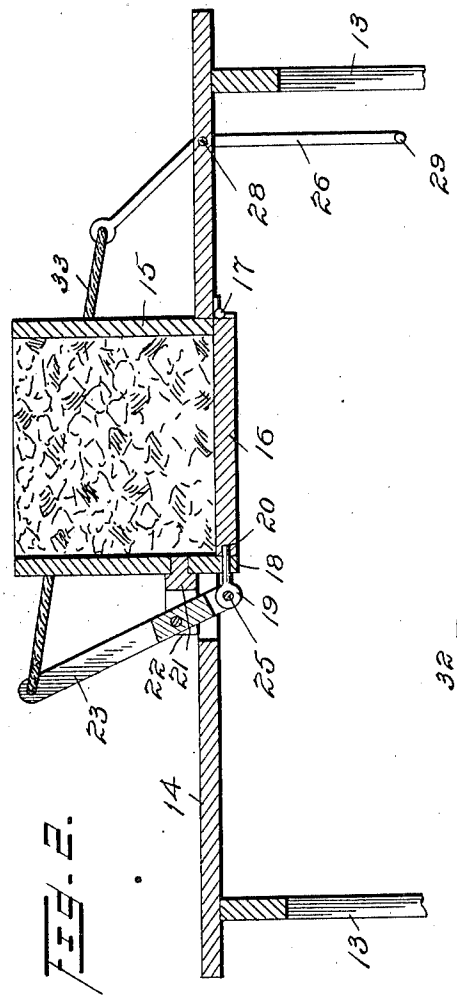

FIG. 2.

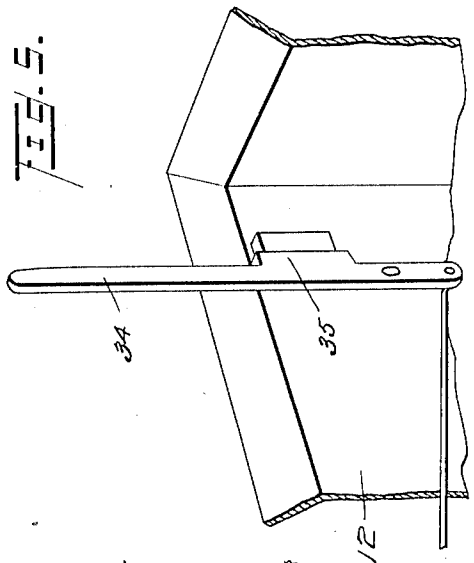

FIG. 5.

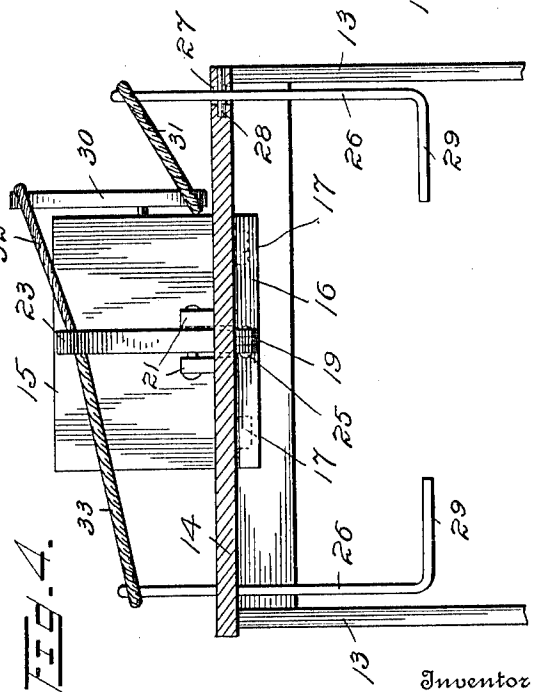

FIG. 4.

Inventor

Clifford C. Leftwich

By Victor J. Evans

Attorney

Witnesses

E. E. Duffy

L. O. Parker.

COLUMBIA PLANOGRAPH CO., WASHINGTON, D. C.

C. C. LEFTWICH.

COALING DEVICE.

APPLICATION FILED JUNE 7, 1911.

1,040,703.

Patented Oct. 8, 1912.

3 SHEETS—SHEET 3.

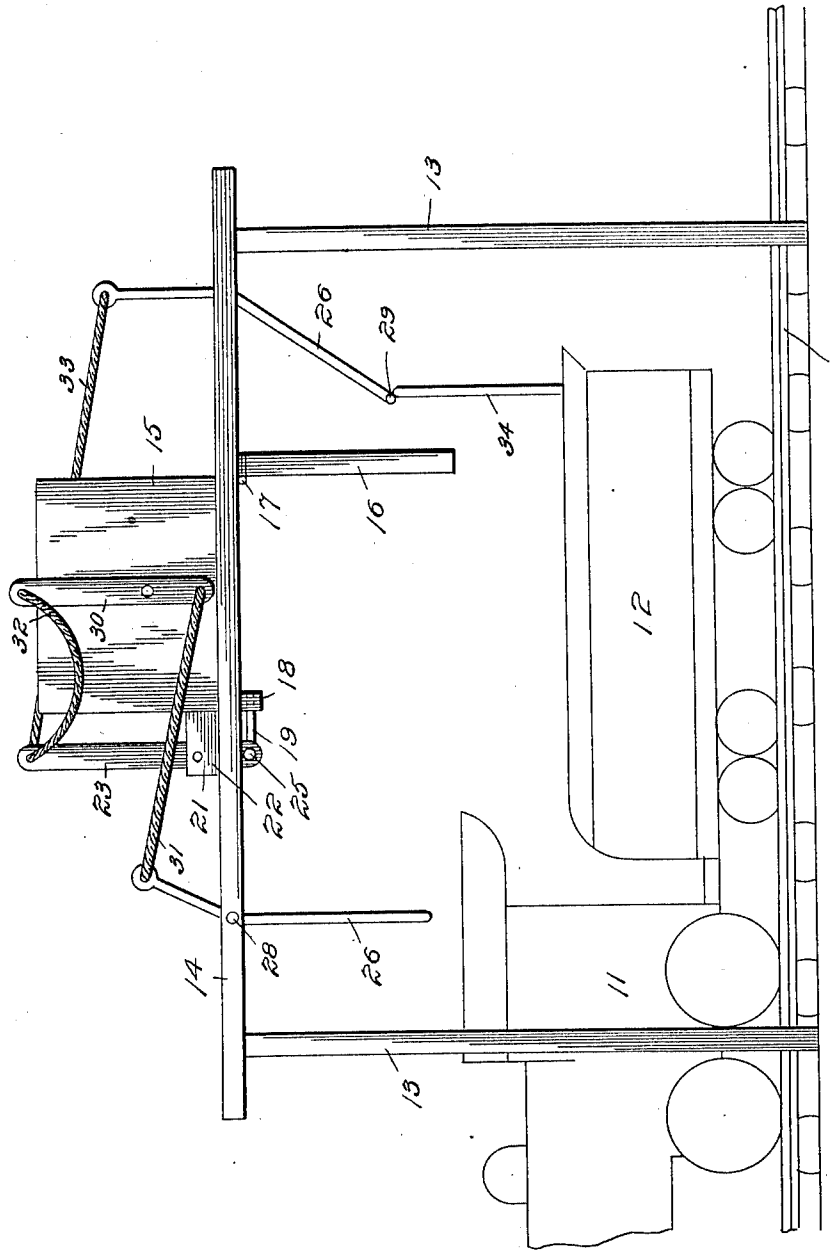

FIG. 3.

Inventor

Clifford C. Leftwich

By Victor J. Evans

Attorney

Witnesses

E. C. Duffy

F. O. Pandow

COLUMBIA PLANOGRAPH CO., WASHINGTON, D. C.

UNITED STATES PATENT OFFICE.

CLIFFORD C. LEFTWICH, OF COUNCIL, VIRGINIA.

COALING DEVICE.

1,040,703. Specification of Letters Patent. Patented Oct. 8, 1912.

Application filed June 7, 1911. Serial No. 631,772.

To all whom it may concern:

Be it known that I, CLIFFORD C. LEFTWICH, a citizen of the United States, residing at Council, in the county of Buchanan and State of Virginia, have invented new and useful Improvements in Coaling Devices, of which the following is a specification.

The invention relates to coaling devices, and more particularly to the class of automatically controlled coaling devices for use with moving railway trains.

The primary object of the invention is the provision of a device of this character in which a tender of the locomotive, while in motion, may be supplied with coal, thus obviating the necessity of stopping the train at coaling stations along a route for this purpose.

Another object of the invention is the provision of a device of this character in which a predetermined quantity of fuel will be automatically delivered into the tender of the locomotive, without requiring the stopping thereof during a run from one point to another.

A further object of the invention is the provision of a device of this character which is automatic in operation, the same being actuated through the medium of a trip device on the passing of a train for the supplying of coal or other material to the tender of the locomotive, without bringing the train to a standstill.

A still further object of the invention is the provision of a coaling device which is simple in construction, efficacious and reliable in operation, and inexpensive in its installation.

With these and other objects in view, the invention consists in the construction, combination and arrangement of parts, as will be hereinafter more fully described, illustrated in the accompanying drawings, and pointed out in the claim hereunto appended.

In the drawings: Figure 1 is a fragmentary side elevation of a railway track, the coaling device positioned relative to the same constructed in accordance with the invention, the view illustrating the approach of a locomotive and its tender toward the coaling device, the latter being set for operation. Fig. 2 is a vertical longitudinal sectional view through the coaling device. Fig. 3 is a view similar to Fig. 1, showing the tender in position for receiving a supply of coal from the coaling device. Fig. 4 is a transverse sectional view on the line 4—4 of Fig. 1, looking in the direction of the arrow. Fig. 5 is a fragmentary perspective view of a locomotive tender with the trip arm in raised position.

Similar reference characters indicate corresponding parts throughout the several views of the drawings.

Referring to the drawings by numerals, 10 designates the usual rails of a railway track secured to the ordinary cross ties upon a road bed, 11 the locomotive, and 12 its coal tender coupled thereto, the same being adapted to travel upon the railway track 10 from one point to another as usual. At required intervals throughout the railway track are located coaling devices, only one of the same being hereinafter fully described.

Suitably anchored, at opposite sides of the track 10 in the road bed, are vertical standards or posts 13, the same being of sufficient length to extend a considerable distance above the highest point of the locomotive, and the cars (not shown) to be hauled thereby. Secured to the upper ends of the uprights or posts 13, directly over the track 10 for a limited distance, is a horizontal platform or deck 14, which affords a base for the coaling device, as will be presently described.

This coaling device comprises a hopper-like body or box 15, the same being fitted in a suitable recess formed in the platform or deck 14, so that its open bottom will be presented for direct communication with the coal tender 12 coupled with the locomotive, when the same passes over the track 10, below the said platform. This hopper-like box or body 15 is suitably fixed to the platform and has its open bottom normally closed by means of a drop door 16, one end of which is swingingly connected to the bottom of the hopper-like box or body 15 by means of a hinge 17, whereby the door 16 may swing from its normal closing position to open position.

Formed on the hopper-like box or body 15 and depending from its end wall, contiguous to the free end of the drop door 16, is an extension ear 18 provided with a central guide opening, in which is slidably mounted a locking bolt or pin 19, the latter being normally inserted in a socket 20

formed in the free end of the drop door; thus the pin 19, when engaged in the door 16, will sustain the latter in closed position to prevent the discharge of the contents of the hopper-like box or body 15, the latter being adapted to be filled with coal which is to be supplied to the tender 12, during the passage of the train along the track beneath the coaling device.

Fixed to the hopper-like box or body 15, slightly elevated above the platform or deck 14, is a bracket 21 having a forked end 22, in which is pivotally connected a swinging arm 23, the lower end of which is connected by means of a pivot 25 to the locking bolt or pin 19, the arm 23 being adapted, when swung in one direction, to retract the bolt or pin 19 for releasing the drop door 16, whereby said door may swing to open position for discharging coal from the hopper-like box or body 15 into the tender 12 coupled with the locomotive.

The arm 23 controlling the locking pin or bolt 19 is actuated through the medium of tripping mechanism comprising a pair of tripping levers 26, the same being arranged at opposite sides of the hopper-like box or body 15, at a suitable distance spaced therefrom, and extending through the platform or deck 14, so as to depend below the same at opposite sides of the track, the levers 26 being connected with the platform for swinging movement by means of pivots 28. The lower ends of the tripping levers 26 are bent at right angles thereto to provide laterally extending engaging arms 29 to be struck by tapping means carried by the tender 12 of a train. The reason for employing a pair of tripping levers 26 is to automatically operate the coaling device by a train when traveling in either direction over the track, the tripping levers 26 being singly operated by the train, during the travel thereof, as said levers are arranged out of alinement with each other on opposite sides of the track.

Pivoted to one side wall of the hopper-like box or body 15 is a rocking arm 30, the lower end of which is connected with one of the tripping levers 26 through the medium of a flexible connection 31, while its opposite end is connected with the swinging arm 23 by means of a flexible connection 32, the other tripping lever 26 being connected with the said swinging arm 23 by means of a flexible connection 33, so that on the swinging of either of the swinging levers 26 in one direction, the said swinging arm 23 will be moved for retracting the locking pin or bolt 19, thereby releasing the drop door 15, whereby the same will swing to open position for discharging the contents of the hopper-like box or body 15 to the tender hauled by a locomotive, without requiring the latter to be brought to a standstill.

Pivotally connected with one side of the tender 12 is a rising and lowering striker arm 34, the same being formed with an abutment shoulder 35 which is adapted to contact with the upper edge of the rear wall of the tender 12 when the said arm 34 has been raised, so that the latter will extend vertically in rigid position in the path of the engaging arms 29 of the tripping levers 26 for swinging the latter in a direction whereby the drop door 16 of the hopper-like box or body will be freed for opening movement, instantly on the arrival of the tender 12 in position for receiving the coal from the hopper-like box or body while the train is traveling upon the track beneath the coaling device. It is evident that upon the lowering of the striker arm 34 on the tender, the coaling device will remain inoperative on the passage of the train beneath the same, the arm being swung to lowered position on the tender, when it is desired not to supply coal thereto.

From the foregoing, taken in connection with the accompanying drawings, it is thought that the construction and operation of the invention will be readily understood, without requiring a more extended explanation, and therefore, the same has been omitted.

What is claimed is:

In a coaling device, a super-frame structure adapted for arrangement above a railway track, a stationary hopper mounted in the said structure, and having an open bottom, a swinging door hinged to the structure and normally closing the open bottom of the hopper, a forked bracket fixed in and projecting outwardly from one side of said hopper, a swinging arm pivoted in said forked bracket, a locking pin pivotally connected to the lower end of said arm and working through one side of the hopper for engagement with the door when closed, trip levers pivoted in the frame structure spaced from and on opposite sides of the hopper and adapted to be actuated by a passing train when traveling in either direction on a track, a rocking arm pivoted to the hopper, a flexible connection between one of said trip levers, and one end of the rocking arm, and a flexible connection between the other trip lever, swinging and rocking arms.

In testimony whereof I affix my signature in presence of two witnesses.

CLIFFORD LEFTWICH.

Witnesses:
JAMES FLETCHER,
MARY A. LEFTWICH.

Copies of this patent may be obtained for five cents each, by addressing the "Commissioner of Patents, Washington, D. C."