July 15, 1930. A. R. WOLFE 1,770,377

SIMPLEX CONTRACTION SOCKET

Filed March 6, 1929

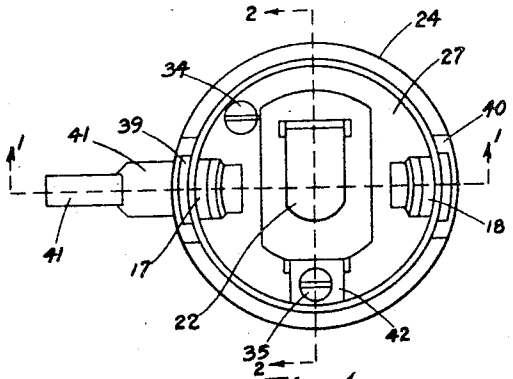

Fig. 1.

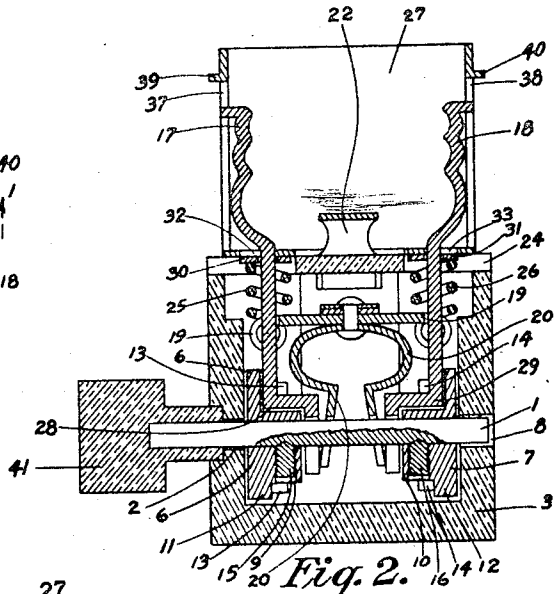

Fig. 2.

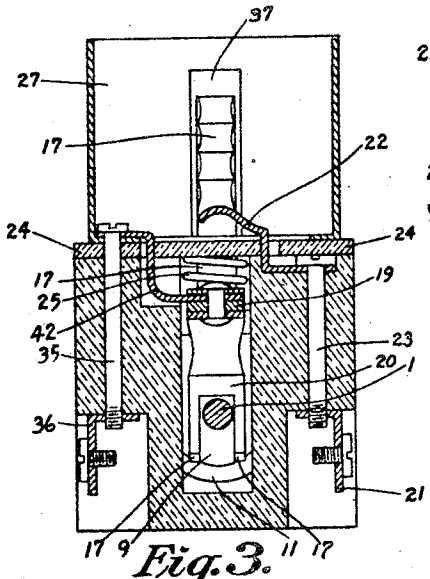

Fig. 3.

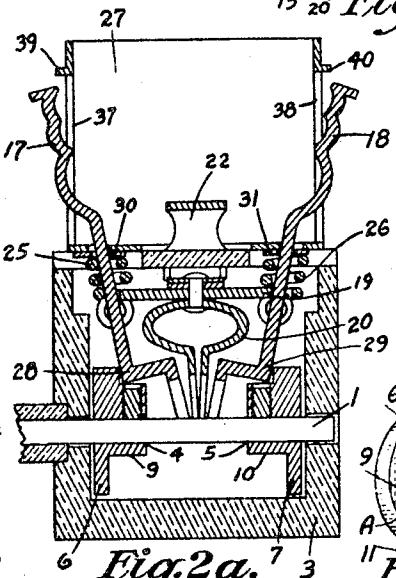

Fig. 2a.

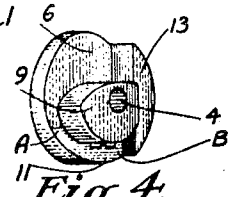

Fig. 4.

ARCHIE R. WOLFE
INVENTOR

BY Harold Dodd

ATTORNEY

Patented July 15, 1930 1,770,377

UNITED STATES PATENT OFFICE

ARCHIE REXALD WOLFE, OF SUMMIT, NEW JERSEY

SIMPLEX CONTRACTION SOCKET

Application filed March 6, 1929. Serial No. 344,891.

(GRANTED UNDER THE ACT OF MARCH 3, 1883, AS AMENDED APRIL 30, 1928; 370 O. G. 757)

My invention relates to improvements in contraction sockets adapted to receive and engage the screw rim of the standard plug or lamp without screwing the latter or said socket, and the objects of my improvements are, first, to produce in a contraction socket a means for elevating and depressing the mechanism for attaching and detaching said screw rim of said plug or lamp, thus obviating the necessity of one element of my previous invention above mentioned, namely, the "movable center contact"; second, to produce a switchless contraction electric socket adapted to carry larger electric currents, and third, to produce a contraction socket readily designed for use as wall and base board receptacles in the home and other buildings.

There are many ways in which cam means in combination with spring means can be used to elevate and depress the screw rim attaching and detaching means in a simplex contraction socket, therefore, only one form of my invention is illustrated in the accompanying drawing, in which, Fig. 1, is a view looking down on the top of the invention from a point vertically above its center; Fig. 2, is a vertical sectional view on the broken line 1—1, Fig. 1; Figure 2^a is a view similar to Figure 2 showing the lever contact jaws expanded; Fig. 3, is a vertical sectional view on the broken line 2—2, Fig. 1; and Fig. 4, is a view of the inward face of one of the compound cams used for elevating and expanding the hinged lever jaws.

Similar numerals refer to similar parts throughout the several views.

The control shaft 1, projects through the bearing aperture 2, provided in the side of the lower section 3, of the insulation body, then through the central apertures 4, and 5, in the rotary compound cams 6, and 7, respectively, and then into the bearing aperture 8, in the other side of said section 3. Said cams 6, and 7, are provided with the vertical acting cams 9, and 10, the horizontal acting cams 11, and 12, and the stops 13, and 14, respectively, and are secured to said shaft by means of the set screws 15, and 16, respectively. Referring to Fig. 4, said horizontal acting cams 11, and 12, begin and are minimum at point A, and gradually increase in thickness in an anticlockwise direction to a maximum at point B.

The inner face of the jaws ofthe lever contact jaws 17, and 18, are provided with raised ribs or threads adapted to grip the threads of the screw rim of the standard plug or lamp without screwing. Said lever contact jaws are hinged near their middle portion to the movable metal fulcrum 19, to the middle of which is secured the main lever spring 20, the ends of which are depressed against the inner surface of the lower ends of said lever contact jaws 17, and 18, thus tending to keep the upper ends or jaws of the latter in the contracted position as shown in Figs. 1, and 2. The lower ends of said levers 17, and 18, and said lever spring 20, are slotted to straddle said shaft 1.

The center contact terminal post 21, and the center contact 22, are secured in cavities provided in the lower and upper end respectively, of said section 3, by means of the machine threaded screw 23. Said center contact 22, projects upward through an aperture provided in the upper section 24, of the insulation body.

The lever depressing springs 25, and 26, encircle said levers 17, and 18, and are depressed between said fulcrum 19, and the bottom flange of the metal receptor 27, thus tending to keep the horizontal surfaces of the shoulders 28, and 29, of said levers 17, and 18, depressed upon said vertical acting cams 9, and 10, respectively. The upper ends of said springs 25, and 26, ride on the washer bushings 30, and 31, respectively, which are adapted to slide freely over the apertures 32, and 33, in said receptor 27.

Section 3, section 24, and receptor 27, are clamped together by means of the tie bolts 34, and 35. The former of which is secured by a nut threaded to it and counter sunk in the bottom of said section 3, and said bolt 35, is threaded to and secured by the receptor terminal post 36. Said receptor 27, is adapted to accommodate the screw rim of the standard plug or lamp without screwing, and is provided with the slots 37, and 38, for accommodating the jaw of said lever contact jaws

17, and 18, respectively, and with the flanges 39, and 40, which limit the distance said lever contact jaws can be elevated.

The insulation handle 41, is secured to one end of said shaft 1, and projects on the outside of said section 3.

Ordinarily one leg of the electric circuit in said socket is completed from said levers 17, and 18, through the fulcrum 19, springs 25, and 26, bushings 30, and 31, receptor 27, and bolt 35, to said receptor terminal post 36. When large current carrying capacity is desired the flexible conductor 42, may be connected between said fulcrum 19, and bolt 35, as shown in Figs. 1, and 3.

Starting with the mechanism in the position as shown in Figs. 1, 2, and 3, the operation of said socket is briefly described as follows: The handle 41, is turned left one hundred eighty degrees until the stops 13, and 14 engage on one side of the shoulders 28, and 29. During the first ninety degrees said cams 9, and 10, acting on the horizontal surfaces of said shoulders 28, and 29, raise the lever contact jaws 17, and 18, a maximum distance against the tension of the springs 25, and 26. During the second ninety degrees the cams 11, and 12, acting on the vertical surfaces of said shoulders 28, and 29, open or expand the jaws of said lever contact jaws 17, and 18, a maximum distance against the tension of the main spring 20. The screw rim of a standard plug or lamp may now be inserted, without screwing, into said receptor 27, as far as it will go. The handle 41, is then turned right one hundred eighty degrees until said stops 13, and 14, engage with the other side of said shoulders 28, and 29. During the first ninety degrees of the latter movement said cams 11, and 12, release said levers 17, and 18, permitting the jaws of the latter to be contracted by said main spring 20, and attach said screw rim. During the second ninety degrees said cams 9, and 10, release said levers 17, and 18, permitting said springs 25, and 26, to depress said lever contact jaws, drawing said plug or lamp farther into said receptor 27, or until the center contact of said plug or lamp engages and makes electrical contact with the center contact 22, of said socket. To disengage and disconnect said plug or lamp, simply turn handle 41, leftward one hundred eighty degrees.

The invention described herein may be manufactured and used by or for the Government of the United States for governmental purposes without the payment to me of any royalty thereon.

I claim:

1. In a contraction socket comprising an insulation body, a means upon said body for attaching and detaching the screw rim of the standard plug or lamp without screwing the latter or said socket, a means for elevating and depressing said attaching and detaching means, and a means on the outside of said body for operating said attaching and detaching means and elevating and depressing means.

2. In a contraction socket comprising an insulation body, hinged metal jaws upon said body for attaching and detaching the screw rim of the standard plug or lamp without screwing the latter or said socket, a means within said body for contracting and expanding said hinged jaws, a means within said body for elevating and depressing said hinged jaws, and a means on the outside of said body for operating said contracting and expanding means and elevating and depressing means.

3. In a contraction socket and the like comprising an insulation body, lever jaws upon said body and hinged to a fulcrum vertically movable with respect to said body, a means within said body for expanding and contracting said lever jaws, a means within said body for elevating and depressing said lever jaws, and a means on the outside of said body for operating said expanding and contracting means and elevating and depressing means.

4. In a contraction socket and the like comprising an insulation body, hinged lever jaws mounted upon said body, a cam means in combination with spring means within said body for expanding and contracting and elevating and depressing said lever jaws, and a single means on the outside of said body for operating said cam means and spring means.

5. In a contraction socket comprising an upper and lower section insulation body and a receptor mounted upon said upper section, a terminal post mounted upon said lower section for said receptor, a center contact upon said upper position, a terminal post mounted upon said lower section for said center contact, lever jaws hinged to a movable fulcrum within said lower section and projecting upward within said receptor, means within said lower section for elevating and depressing and contracting and expanding said lever jaws, and a single means on the outside of said lower section for operating said elevating and depressing and contracting and expanding means.

6. In a contraction socket comprising a metal receptor mounted upon an insulation body, lever jaws upon said receptor and hinged to a fulcrum vertically movable within said body, a spring secured to said fulcrum for contracting said lever jaws, springs depressed between said fulcrum and said receptor for depressing said lever jaws, a means for expanding said lever jaws against the tension of said contracting spring and for elevating said lever jaws against the tension of said depressing springs and comprising two rotary compound cams secured to a rotatable shaft and adapted to engage said lever jaws, bearings upon said body for said shaft, and an insulated handle projecting on the outside

of said body and secured to said shaft for rotating the latter.

7. In a contraction socket comprising a receptor adapted to accommodate the screw rim of the standard plug or lamp without screwing and mounted upon an insulation body, hinged lever jaws upon said receptor and projecting within said body, a spring means within said body for contracting said jaws, a spring means within said body for depressing said lever jaws, a cam means within said body for elevating and expanding said lever jaws, and a means on the outside of said body for operating said spring means and cam means.

ARCHIE REXALD WOLFE.