FORM 1 APPLICATION ACCEPTED AND AMENDMENTS ALLOWED 14-5-90

REGULATION 9

599568

COMMONWEALTH OF AUSTRALIA

PATENTS ACT 1952

APPLICATION FOR A STANDARD PATENT

41644/85

I, LEROY G. HAGENBUCH,

of 4602 N. Rosemead,
Peoria, Illinois, 61604
U.S.A.

hereby apply for the grant of a Standard Patent for an invention entitled:-

"APPARATUS AND METHOD REPSONSIVE TO THE ON-BOARD MEASURING OF THE LOAD CARRIED BY A TRUCK BODY"

which is described in the accompanying complete Specification.

Details of basic application:

Number: 604,739 and 717,042

Country: U.S.A.

Date: 27th April, 1984 and 1st April, 1985

LODGED AT SUB-OFFICE
24 APR 1985
Sydney

My address for service is:- SHELSTON WATERS,
55 Clarence Street
SYDNEY. N.S.W. 2000

FEE STAMP TO VALUE OF $ 1330 ATTACHED
MAIL OFFICER

Dated this 17th day of April, 1985

LEROY G. HAGENBUCH

By W J Lloyd

Fellow Institute of Patent Attorneys of Australia
of SHELSTON WATERS

To: The Commissioner of Patents,
WODEN. A.C.T. 2606

File: D.B. 128Q

Fee: $1330.00

MK

(CONVENTION—One or More Persons)

FORM 8—REGULATION 12 (2)

COMMONWEALTH OF AUSTRALIA

PATENTS ACT, 1952-1969

DECLARATION IN SUPPORT OF A CONVENTION APPLICATION FOR A PATENT

FEE STAMPS

41644/85

In support of the Convention Application for a patent for an invention entitled:

(a) Here insert Title of Invention.

(a) Apparatus and Method Responsive to the On-Board Measuring of the Load Carried by a Truck Body

(b) Here Insert (In full) name(s) of Applicant(s).

I/We (b) LeRoy G. Hagenbuch

(c) Here Insert (In full) Address(es) of Applicant(s).

of (c) 4602 N. Rosemead, Peoria, IL 61604, U.S.A.

do solemnly and sincerely declare as follows:

1. I am/~~We are~~ the Applicant(s) for the Patent.

2. The basic Application(s) as defined by section 141 of the Act was/were made in (d) U.S.A. on the 27th day of April 19 84

(C.I.P) U.S.A. on the 1st day of April 19 85

(d) Here Insert Basic Country or Countries followed by date or dates of Basic Application(s)

(e) Here Insert Full Name(s) of Applicant(s) in Basic Country.

by (e) LeRoy G. Hagenbuch

3. I am/~~We are~~ the actual Inventor(s) of the invention referred to in the basic Application ~~(or, where a person other than the Inventor is the Applicant).~~

(f) Here Insert Full Name(s) and Address(es) of actual Inventor(s) if other than Applicant(s).

3. (f) .....

of .....

.....is/are

the actual Inventor(s) ~~of the~~ invention and the facts upon which I am/~~we are~~ entitled to make the Application are as follows:

~~I am/We are the Assignee(s) of the said Inventor(s).~~

4. The basic Application(s) referred to in paragraph 2 of this Declaration ~~was~~/were the first Application(s) made in a Convention country in respect of the invention, the subject of the Application.

DECLARED at Peoria, Illinois, U.S.A.

this 26TH day of JUNE 19 85

(g) Signature(s) of Applicant(s).

(g) .....

LeRoy G. Hagenbuch

To THE COMMISSIONER OF PATENTS.

SHELSTON WATERS
PATENT ATTORNEYS
55 CLARENCE STREET, SYDNEY
AUSTRALIA

(12) PATENT ABRIDGMENT (11) Document No. AU-B-41644/85
(19) AUSTRALIAN PATENT OFFICE (10) Acceptance No. 599568

(54) Title
APPARATUS AND METHOD RESPONSIVE TO THE ON-BOARD MEASURING OF THE LOAD CARRIED BY A TRUCK BODY

International Patent Classification(s)
(51)[4] B60P 005/00 F16L 033/00 G01B 021/30 G01D 001/16
G01G 005/04 G01G 019/10 G01G 019/12 G01G 019/62
G01M 017/02 G08C 017/00 G08G 001/01

(21) Application No. : 41644/85 (22) Application Date : 24.04.85

(30) Priority Data

(31) Number	(32) Date	(33) Country
604739	27.04.84	US UNITED STATES OF AMERICA
717042	01.04.85	US UNITED STATES OF AMERICA

(43) Publication Date : 31.10.85

(44) Publication Date of Accepted Application : 26.07.90

(71) Applicant(s)
LEROY G. HAGENBUCH

(72) Inventor(s)
LEROY G. HAGENBUCH

(74) Attorney or Agent
SHELSTON WATERS

(56) Prior Art Documents
AU 86763/82 560512 G01G 19/16 E02F 9/26 B60P 5/00
US 4308494
EP 35809

(57) Claim

1. A system for acquisitioning and accumulating data indicative of the operation of a haulage vehicle said system comprising:

first means mounted to said vehicle for providing data indicative of a loading of material onto a body of said vehicle;

a first processor means on-board said vehicle for acquiring data from at least said first means and organizing said data to provide information regarding the performance of said vehicle;

a second means for accumulating said information from said first processor means so as to create a historical

.../2

data base of haulage events defined by said information; and

a third means for providing data identifying said vehicle and distinguishing it from other vehicles and delivering the data to said processor means to be incorporated into said information.

3. A system as set forth in claim 2 wherein said fourth means includes a device for detecting a forward-neutral-reverse status of a drive train associated with said haulage vehicle.

599568

FORM 10

COMMONWEALTH OF AUSTRALIA

PATENTS ACT 1952-69

COMPLETE SPECIFICATION

FOR OFFICE USE:

Class Int. Class

Application Number:
Lodged:

Complete Specification Lodged:
Accepted:
Published:

Priority:

Related Art:

41644/85

This document contains the amendments made under Section 49, and is correct for printing.

Name of Applicant: LEROY G. HAGENBUCH

Address of Applicant: 4602 N. ROSEMEAD, PEORIA, ILLINOIS, 61604 U.S.A.

Actual Inventor: LEROY G. HAGENBUCH

Address for Service: Shelston Waters, 55 Clarence Street, Sydney

Complete Specification for the invention entitled:

"APPARATUS AND METHOD RESPONSIVE TO THE ON-BOARD MEASURING OF THE LOAD CARRIED BY A TRUCK BODY"

The following statement is a full description of this invention, including the best method of performing it known to me/us:—

SW16

ABSTRACT

The invention relates to an apparatus for accurately measuring the weight of a load carried by a truck body which is mounted on a truck frame. The apparatus is located along an interface between the truck frame with the load carried by the truck body and uniformly distributes the weight of the body onto the frame along the interface. In order to measure the weight of the load, the apparatus includes pressure sensors which communicate the entire weight of the load to the truck frame. The pressure sensors provide an electrical signal proportional to the pressure exerted by the load on the apparatus. This electrical signal is processed to calculate the weight of the load carried in the truck body. By providing a pressure sensing apparatus at an interface between the load and truck frame, the weight on the load carried by the truck body can be continually monitored without interrupting the loading, hauling and dumping routine. A sensor processing unit responds to the continually monitored weight data and the like to provide hauling parameters to track the performance of the truck and to provide a data base to a central computer from which data can be gathered for efficiently controlling the movement of a plurality of trucks.

TECHNICAL FIELD

The invention generally relates to the measuring of the load of a vehicle and, more particularly, to the measuring and acquisition of data indicative of loading conditions for a hauling vehicle.

BACKGROUND

Often, off-road trucks are subjected during their routine use to weight loads which differ greatly because of different material density and/or the ability of some material to more tightly pack when loaded into the truck body. As a result, truck bodies which are always filled to their full volume capacity may carry weight loads which exceed the weight capacity of the truck. Repeated occurrences of overloading result in the premature deterioration of the structural integrity of the truck, thus requiring repair or replacement of parts before anticipated. In order to avoid the damage caused by overloading, the truck body can be filled to a volume which assures the truck is not overloaded even for the most dense material. Although underloading may prevent the premature deterioration of the structural integrity of the truck, it sacrifices the truck's load-hauling efficiency. Therefore, an off-road truck which is expensive to operate becomes even more expensive to operate when it is underloaded. Accordingly, there is a need to precisely measure the load carried by an off-road truck. This need has stimulated the development of on-board weighing devices that monitor and measure the truck's load.

Of course, in order to measure the on-board weight of a load carried by a truck, the truck must necessarily incorporate load sensors into its frame and/or body. In a dump-body truck, the body is

movable on the truck's frame between lowered and raised positions. To provide for this movement, the body is usually attached to the frame only by a pair of hinge assemblies and a pair of hydraulic cylinders. In one common construction of a dump-body truck, when the truck body is in its lowered position, its entire weight is communicated to the truck frame along a cushioned interface between the truck's frame and body. In this lowered position of the truck body, the hinge assemblies and hydraulic cylinders do not support the weight of the truck body and, therefore, they do not transfer any of the body's weight to the truck frame. By freeing the hinge assemblies and the hydraulic cylinders from the weight of the lowered truck body, the amount of stress on these areas is reduced and, accordingly, their useful life is extended.

Traditionally, in order to provide an on-board weighing device for this type of a dump-body truck, load sensors are incorporated into the hinge assemblies and the hydraulic cylinders. Accordingly, in order to measure the load, the truck body must be lifted from its lowered position by the hydraulic cylinders so that the weight of the load is transferred to the frame through the cylinders and the hinge assemblies. Although the accuracy of the load measurements obtained from load sensors associated with the hydraulic cylinders and the hinge assemblies is satisfactory, the structural integrity of the truck may be degraded by modifications of the hinge assemblies and hydraulic cylinders required to incorporate the load sensors which cause concentration of the load on the frame. Moreover, the impact of falling material onto the bed of the truck is especially severe for the frame of the truck

when the body is lifted slightly from its lowered position.

More important than the structural disadvantage of on-board weighing devices which incorporate load sensors in the truck's hinge assemblies and hydraulic cylinders, is the disadvantage of requiring the truck's body to be lifted off the frame in order to obtain a weight reading. Because this requirement consumes valuable time otherwise available for loading, hauling and unloading and because of the concentration of the load on the frame, the truck operator is discouraged from weighing the truck load; it is faster to approximate the load. Since the on-board weighing device interferes with an efficient and smooth hauling operation, there is a tendency to not use the weighing device. Therefore, the advantages of on-board weighing devices in dump-body trucks have not been fully realized. Also, the requirement of lifting the truck body off the frame in order to obtain a weight measurement prevents continuous or periodic monitoring of the body's weight.

In order to continuously monitor and measure the load carried by a dump-body truck, it is known to use pressure gauges or similar type load sensors in the truck's suspension. Usually, in these types of weighing devices, the fluid pressure within a hydraulic suspension cylinder is sensed. Because of the relatively short stroke of the cylinder and the relatively large amount of frictional resistance to the cylinder's movement (the front cylinders normally also serve as the front axle spindles), the pressure reading is not a satisfactorily accurate indication of the truck's weight. In addition, the modification of the truck's suspension to include load sensors

opens the possibility of dangerously degrading the suspension system.

SUMMARY OF THE INVENTION

It is the general object of the invention to provide an apparatus which substantially ameliorates at least some of the disadvantages of the prior art.

According to one broad form the present invention provides a system for acquisitioning and accumulating data indicative of the operation of a haulage vehicle said system comprising:

first means mounted to said vehicle for providing data indicative of a loading of material onto a body of said vehicle;

a first processor means on-board said vehicle for acquiring data from at least said first means and organizing said data to provide information regarding the performance of said vehicle;

a second means for accumulating said information from said first processor means so as to create a historical data base of haulage events defined by said information; and

a third means for providing data identifying said vehicle and distinguishing it from other vehicles and delivering the data to said processor means to be incorporated into said information.

BRIEF DESCRIPTION OF THE DRAWINGS

FIGURE 1 is an elevated perspective view of a dump-body truck with the truck body in a raised or dump

AUSTRALIAN PATENT OFFICE LS

position so as to expose the on-board weighing device according to the preferred embodiment of the invention;

FIG. 2 is an enlarged elevated perspective view of the dump-body truck in FIG. 1 that more clearly shows the on-board weighing device according to the preferred embodiment of the invention;

FIG. 2a is an exploded perspective view of a truck having a stationary body and supported on a frame incorporating the on-board weighing device according to the invention;----------

AUSTRALIAN PATENT OFFICE LS

FIG. 2b is a systems diagram of an on-board system according to the invention for monitoring, storing and analyzing truck parameters which includes the on-board weighing device as well as other sensor inputs;

FIG. 3 is a cross-sectional view of one of the truck body hinge assemblies joining the truck body and frame, taken along the line 3-3 in FIG. 2 and showing three alternative pivot pin assemblies offered by various truck manufacturers;

FIG. 3a is a sectional view of the truck hinge assembly taken along the line 3a-3a in FIG. 3 and showing a suggested modification to one of the pivot pin assemblies of FIG. 3 in order to make the hinge assembly "free-floating";

FIG. 4 is a side view of the preferred embodiment of the on-board weighing device according to the invention, taken substantially along the line 4-4 in FIG. 2;

FIG. 5 is a front view of the on-board weighing device according to a first alternative embodiment of the invention, taken along the line 5-5 in FIG. 4;

FIG. 5a is a front view of a second alternative embodiment for the on-board weighing device according to the invention, taken along the line 5-5 in FIG. 4;

FIG. 6 is a front view of the preferred embodiment for the on-board weighing device according to the invention, taken along the line 5-5 in FIG. 4;

FIG. 7 is a cross-sectional view of the preferred embodiment for the on-board weighing device according to the invention, taken along the line 7-7 in FIG. 4;

FIG. 7a is an enlarged partial side view of the on-board weighing device taken along the line 7a-7a in FIG. 7 showing details of the means for securing the device to the truck frame;

FIG. 8 is a plan view of a clamping subassembly of the on-board weighing device;

FIG. 8a is an exploded end view of a clamp portion of the clamping subassembly, taken along the line 8a-8a in FIG. 8;

FIG. 9 is a cross-sectional view of the clamping subassembly in FIG. 8, taken along the line 9-9 and showing a side view of a collar portion of the subassembly;

FIG. 10 is a side view taken along the line 4-4 in FIG. 2 showing a first alternative embodiment of the on-board weighing device according to the invention;

FIG. 11 is an end view of the first alternative embodiment of the on-board weighing device, taken along the line 11-11 in FIG. 10;

FIG. 12 is a side view taken along the line 4-4 in FIG. 2 showing a second alternative embodiment of the on-board weighing device according to the invention;

FIG. 13a is a side view of a heavy duty, off-road truck illustrating the relative dimensions of the truck used by the on-board weighing device of the invention to measure front and rear axial loads;

FIG. 13b is a side view of the heavy duty, off-road truck of FIG. 13a with the truck body slightly raised by the hoist cylinders in order for the on-board weighing device to complete a determination of front and rear axial loads;

FIGS. 14a and 14b are side views of a scraper vehicle in its raised and lowered positions, respectively, illustrating the relative dimensions used to estimate front and rear axial loads;

FIGS. 14c and 14d are partially side views of the scraper vehicle in FIGS. 14a and b, respectively,

illustrating the relative positions of the vehicle's hoist cylinder and associated mechanisms;

FIGS. 15a and 15b are plan and side views, respectively, for a platform scale incorporating the on-board weighing device of the invention;

FIG. 16 is a block diagram of the electronic system which receives signals from the on-board weighing device according to the invention;

FIG. 16a is a schematic diagram of the temporary memory used in connection with the electronic system of FIG. 16;

FIG. 17a is a plan view of a mechanical processing system for receiving signals from the on-board weighing device in lieu of the elctronic system of FIG. 16;

FIG. 17b is a cross-sectional view of the mechanical processing system taken along the lines 17b-17b in FIG. 17a;

FIG. 17c is a perspective vie of the piston subassembly of the mechanical proce. sing system;

FIGS. 18a-18r are flowchart diagrams for the software utilized in connection with the electronic system of FIG. 14;

FIGS. 19a and 19b are schematic diagrams illustrating a truck distribution system utilizing the weight data received from the on-board weighing device of the invention;

FIG. 19c is a enlarged, partial sectional view of the truck body showing an alternative embodiment for sensing the presence of a load for use in connection with the truck distribution system of FIGS. 19a and 19b; and

FIGS. 20a and 20b are flowchart diagrams for the software of the central computer and truck, respectively, utilized in connection with the truck distribution system of FIGS. 19a and 19b.

While the invention will be described in connection with a preferred embodiment and certain alternative embodiments, it will be understood that it is not intended to limit the invention to those particular embodiments. On the contrary, it is intended to cover all alternatives and equivalents as may be included within the spirit and scope of the invention as defined by the appended claims.

DESCRIPTION OF THE PREFERRED EMBODIMENT

Turning to the drawings, and referring first to FIG. 1, an exemplary off-road truck 11 includes a truck body 13 which is hinged to the truck frame 15 at hinge assemblies 17. By controlling the extension of telescoping hydraulic cylinders 19 and 21, the truck body 13 is pivoted between a fully inclined or dump position and a lowered or rest position. One end of each hydraulic cylinder 19 and 21 is fastened to a hinge assembly located on the bottom of the truck body 13. The opposing end of each cylinder 19 and 21 is fastened to an articulation on the truck frame 15. Structurally, the truck body 13 consists of steel panels 23, which form the shape of the body, and beams 25 which provide the body's structural framework. Since other dump-body trucks may also use the on-board weighing device of this invention, the truck in FIG. 1 is intended as an exemplary truck frame and truck body utilized in connection with the invention.

Often, off-road trucks, such as the one shown in FIG. 1, are very large. For instance, it is not uncommon for the truck's tire diameter to be as great as the height of an average man. Accordingly, the tremendous size of these trucks makes them expensive to operate and repair. Since these trucks represent

both a large capital investment and a large operating expense, preventing both overloading of the truck body and under-utilization of the truck's load capacity (i.e., underloading) are important considerations in insuring the truck is operated in the most profitable manner. In particular, if the truck is overloaded it will tend to have a shorter usable life because of the excessive wear caused by the overloading. On the other hand, if the truck is underloaded, the truck must be operated over a longer period of time, thereby consuming more fuel and wearing the truck's parts to a greater degree. Therefore, the ability to accurately measure the truck's load is important to the efficient operation of large off-road trucks. Also, since these off-road, heavy duty trucks are extremely expensive to operate, loading and hauling parameters indicative of truck performance can be of great economic value by using the parameters to discover areas of the performance which may be improved.

Typically, a shovel or front-end loader is used to fill the truck body. With a front-end loader, material is loaded into the truck body 13 by a bucket located at the end of an arm of the loader wherein the arm controls the movement of the bucket. Typically, the truck body has a weight and volume capacity such that a plurality of loaded buckets must dump material into the truck body 13. Even though the operator of the front-end loader is at an elevated level when operating the loader, he or she may not be in a position to see over the edge of the truck body to determine the level of loading. Consequently, it is difficult to exactly control the amount of material loaded into the truck body. Moreover, the density of the material loaded into the

truck body often varies over a significant range; therefore, even if it is possible to accurately determine a certain level of loading, a particular level is only a reliable indication of a weight limit when the material is homogeneous and its density is known.

As most clearly shown in FIG. 2 the truck frame 15 is composed of two parallel beams 26 and 27 connected by transverse beams (not shown) to form a support surface for the truck body 13 over the rear axle of the truck. In order to provide a pivot axis for the truck body 13, each of the hinge assemblies 17 integrally connects one end of each of the parallel beams 26 and 27 to one of beams 28 and 29 on the underside of the truck body. In its lowered position, the beams 28 and 29 of the truck body 13 mate with the beams 26 and 27 of the truck frame 15. As will be more fully explained hereinafter, when the truck body 13 is in its lowered position, the entire weight of the truck body and its load is transferred to the truck frame 15 by way of the interface between the beams 26 and 27 of the frame and the beams 28 and 29 of the body. As mentioned above, trucks of different design than that shown as an exemplary embodiment may use the invention. Some truck designs have beams 26 and 27 which are angled with respect to the ground. These types of trucks may also be equipped with the invention if suitable precautions are taken against slippage of the apparatus on the beams and to ensure proper calibration.

Each of the hinge assemblies 17 includes first and second complementary hinge members 30 and 31 which are secured to the frame 15 and body 13, respectively, and interconnected by a pivot pin 32.

The hydraulic cylinders 19 and 21 and the truck body 13 are interconnected by hinge assemblies 33. (Only one of the hinge assemblies 33 can be seen in the view of FIGS. 1 and 2). Hoist pins 35 interconnect the complimentary hinge members 37 and 39 of the hinge assemblies 33. Although, as the cylinders extend, the hinge assemblies 33 accommodate the relative repositioning between the hydraulic cylinders 19 and 21 and the truck body 13, articulating assemblies 41 (only one is shown in Figs. 1 and 2), which connect the cylinders to the truck frame 15, allow a similar relative repositioning between the hydraulic cylinders and the truck frame 15.

Ordinarily, cushioning support materials such as rubber pads (not shown) are added along the length of the two parallel beams 26 and 27 of the truck frame 15 so when the truck body 13 is in its lowered position the material provides a cushioned interface between the beams 28 and 29 of the truck body and the beams 26 and 27 of the truck frame. In order to evenly distribute the weight of the truck body 13 along the length of the frame 15 and thereby provide the best possible weight distribution for the frame, the cushioning support material is characterized by a thickness dimension which, as explained hereinafter, cooperates with the hinge assemblies 17 when the truck body is moved to its lowered position. The cooperation of the cushioning support material and the hinge assemblies 17 frees the assemblies from supporting any of the truck body's weight when the body is in its lowered position.

Referring to FIG. 4, in accordance with the invention, the cushioning support materials mounted by the manufacturer on the parallel beams 26 and 27

of the truck frame 15 are replaced by lengths of fluid-filled tubings 47 that are laid along the lengths of the parallel beams to provide, when combined with pressure sensors, an on-board weighing device which accurately measures the weight of the truck body 13 while it is in its lowered position. Each of the tubings 47 is capped by an inverted U-shaped metallic shield 49 to protect the tubing at its interface with the truck body 13. The inverted U-shaped shields which protect the tubing are free to move vertically on the parallel beams 26 and 27. As illustrated in FIG. 4, each of the fluid-filled tubings 47 is divided into fore and aft sections which may either be created by clamping the center of one long tubing or providing two separate sections of tubing. At the ends of each of the fluid-filled tubings 47 are pressure sensors 51a-d which measure the liquid pressure within the tubing (which may be remote mounted).

Because the on-board weighing device offers a reliable indication of the weight of a dump body while the body is in its lowered or resting position, weight data may be accurately and continuously monitored and processed. Applicant believes such an ability was previously unavailable for dump-body trucks. Based on this ability, the on-board weighing device provides vehicle information features which, to the best of applicant's knowledge, were previously unavailable. Limited only by the sensitivity of the sensors used as the pressure sensors 51, the on-board weighing device may provide a highly accurate indication (e.g., .25% or .5% error) of the load carried by an off-road, heavy-duty truck. An example of a particular pressure transducer which may be used for the pressure sensors 51 is the Heise Series 620

Pressure Transducer, manufactured by the Instruments Division of Dresser Industries, Newton, Connecticut. Another example of a pressure sensor suitable for use in connection with the invention is the AMETEK LVDT pressure transducer, manufactured by Ametek of Sellersville, Pennsylvania. The following paragraphs characterize the general and particular aspects of the invention which are described in detail in later sections of this description.

Referring to FIG. 2a, a fixed body 13' fitted to the frame 15 of the truck 11 may also utilize the on-board weighing system of the invention. The particular means for coupling the frame 15 to the body 13' in FIG. 2a allows the full weight of the body to rest upon the tubings 47. The coupling means, pins 160 supported by cross members 162 of the frame 15 and cooperating bores 164 in cross members 166, prevent fore-and-aft or side-to-side movement of the body relative to the frame while, at the same time, allowing free vertical movement of the body 13'. In order to prevent the body 13' from accidentially freeing itself from the body by bouncing high off the frame, a cotter pin or similar retainer means 168 is secured at the top of the pins 160 in order to limit the vertical movement of the body. As indicated by FIG. 2a, the stationary truck body 13' may in style be a dump-body, (the leftmost portion of the body 13'), a flatbed body (the rightmost portion of the body 13'), or it may be other known body types which suitably function as stationary bodies.

Referring to FIG. 2b, in addition, the on-board weighing device includes a processor means 101 responsive to signals from the sensor 51a-d. By providing an on-board processing means, the raw

pressure data from the on-board weighing device can be monitored and converted to useful weight information for the real-time control of the truck by the operator. As a complement to the pressure data, the on-board system illustrated in FIG. 2b includes other input data source with provide raw data to the processor means 101. As will be explained more fully hereinafter, useful operator information is supplied via outputs from the processor means 101 in response to the pressure data from the on-board weighing device and its complementary sensors.

The complementary systems in ths system include, but are not limited to, a hoist cylinder pressure gauge 139, a distance sensor 138, a forward-neutral-reverse (F-N-R) switch 135 and a dump switch 137. A keypad 122 is used by the operator to request data and to enter an operator number which identifies himself to the system. Examples of other possible complementary input devices are fuel consumption flow meters and slope transducers for detecting the pitch or grade of the road.

Various on-board outputs controlled by the processor means 101 provide the truck operator with indications of truck operating conditions in response to the raw data from the on-board weighing device and complementary sensors. Specifically, a printer 119 provides a hard copy output for analysis by the truck operator or management personnel. An audio output 196 alerts the operator to situations requiring immediate attention. Similarly, display 197 tells the operator of a load imbalance which requires correction. In order to provide the operator with non-permanent data information, such as current weight, a digital display 117 is provided. Stacked lights 140 are preferably mounted on the side of the

truck in order to give the operator of the loader equipment an idea of the remaining capacity in the truck. Finally, a transceiver 150 is provided in order to download accumulated data to a remote site for construction of historical files. The cooperation and interaction of the foregoing inputs and outputs in FIG. 2b will be set forth in detail hereinafter. Before proceeding to the specific description of this cooperation and interaction, a summarized overview will be presented. Following this, descriptions of subassemblies for the on-board weighing device will be described in detail and alternative embodiments of the device will be briefly mentioned before proceeding to a detailed discussion of data manipulation.

In accordance with the invention, an apparatus for processing data derived from the weight of the load carried by the body of a truck includes a processor means 101 for receiving data from the pressure sensors 51 and, in response thereto, detecting a change in the weight of the truck body and formulating data indicative of truck condition in response to changes in pressure data from the pressure sensors. Pressure data and indications of changes in the data are used by the processing means 101 to establish a data base from which various truck parameters may be monitored either by the processor means or by a remote stationary processor (not shown) radio linked to the on-board processor by way of transceiver 150.

In accordance with one particular aspect of the invention, the processor means 101 cooperates with the on-board weighing device for determining the average weight of the material carried by a bucket of a front-end loader and displaying information to the

truck or loader operator on the stacked display 140 indicative of whether another full bucket can be loaded into the truck body 13 without overloading the truck. If another full bucket cannot be loaded into the truck, a display indicates to the truck or loader operator the fraction of a loaded bucket which can be safely added to the truck body. By providing the foregoing means and functions, the truck 11 can be safely and regularly loaded to its maximum hauling weight without risking damage to the truck by exceeding its weight limit.

In connection with the foregoing, the processor means includes means for detecting an overload condition by comparing the actual weight of the truck body with a predetermined maximum weight. If the weight of the truck body exceeds the predetermined maximum weight, an overload condition is recorded and indicated to the truck operator on digital display 117.

In accordance with another particular aspect of the invention, the on-board weighing device cooperates with a pressure sensor 139 in the hydraulic line of the hydraulic cylinders 19 and/or 21 to provide data to the processor means 101 for establishing the relative weight distribution of the truck body over the front and rear axles. The processor means 101 processes the pressure readings from the on-board weighing device and pressure readings from the sensor 139 of the hydraulic cylinders 19 and/or 21 in order to provide the truck operator with accurate values for front and rear axle loads.

In accordance with yet another particular aspect of the invention, the on-board weighing device includes means for providing a plurality of pressure

readings fore and aft of the truck body 13, and, in addition, side to side of the truck body. The processor means 101 compares the fore and aft or side-to-side distributions of load in order to warn the truck operator at display 197 or audio output 196 of imbalanced conditions which may harm the truck.

In accordance with still another particular aspect of the invention, the on-board weighing device cooperates with distance sensor 138 to provide data to the processor means 101 in order to give an indication of tire wear in units of tons·miles/hour which is commonly used in the heavy duty truck industry as an indication of the loading capability of the tire. This unit of measurement has been established as a maximum tire loading and is indicative of tire wear for tires of heavy duty, off-road trucks. Tire wear is important since, for many truck users, the highest hourly operating cost after the operator himself is the cost of tire replacement. For each haul cycle segment (i.e., load to dump site or vice versa),the processor means 1) reads the pressure reading from the on-board weighing device which corresponds to the weight of the body 13 and adds to that weight the known weight of the truck, 2) reads the hauling distance of the truck from the distance sensor 138 and 3) reads the hauling time of the truck. This collected data is downloaded to a remote central station for calculation of ton·mile per hour for display to management personnel. In a related aspect of the invention, the processor means is responsive to the pressure data from the on-board weighing device and the data from the distance sensor to provide an indication of truck movement when the body is not fully lowered on the truck frame and also to provide

an indication of a "haul-back condition", i.e., a partial load remaining in the body after a dump has been completed.

In accordance with another particular aspect of the invention, the processor means 101 includes means for processing and storing hauling data derived from the on-board weighing device in order to catalog and record important parameters of truck and operator performance. By identifying each operator and/or down- time status, (e.g., operator on break, truck in shop for maintenance) by unique identification numbers, data generated while a particular operator is controlling the truck or while the truck is in a particular down-time status may be recorded and cataloged by the processor means. Operator data is stored in a memory means until they are called for by the operator through keypad 122. When called, the processor means organizes the data into a displayed/printed summary.

In accordance with another particular aspect of the invention, the processor means 101 includes means for determining the degree of roughness of the road traveled by the truck 11 by identifying pressure spikes measured by the on-board weighing device. Because excessively rough roads can affect the efficiency of hauling and, more importantly, substantially damage the trucks, the degree of roughness of the roads traveled by the truck 11 is an important parameter.

In accordance with another particular aspect of the invention, a central computer is provided having a signal link with each of the processors means 101 on-board the off-road, heavy duty trucks. Data transmitted from each of the processor means by way of transceiver 150 to the central computer is

processed by it and instruction data is returned to each processor means. Specifically, a data base is developed by the central computer from data downloaded from the processor means 101 of all the trucks whereby the central computer monitors and controls truck movement. For example, conclusions reached from the downloaded data, are used by the central computer to route the trucks to load and dump sites most efficiently and/or to control the type of load delivered to a particular dump site.

Finally, in accordance with another particular aspect of the invention, the foregoing features provided by the processor means in response to data from the on-board weighing device and accessory devices mounted on the truck are also realized for an off-road scraper vehicle or for a stationary platform scale. For a scraper vehicle, pressure data indicative of material load is provided to an on-board processor means for generating a data base from which total load and load distribution can be estimated. For a platform scale, the on-board weighing device is modified to provide the essential pressure data required by the processor means to establish a data base from which total load can be determined.

Turning now to specific subassemblies of the on-board weighing device and also several alternative embodiments of the device, FIG. 3 illustrates three alternative embodiments in one cross-sectional view in order to show common hinge assembly configurations offered by various truck manufacturers. Referring specifically to the center embodiment in FIG. 3, in order to free the hinge assemblies 17 from the weight of the truck's load when the truck body is moved to its lowered position, oversized bores 43 of the hinge

members 30 (the bores receive the body pivot pins 32) allow the hinge members 31 to lift the pivot pins 32 into a position which disengages the hinge member 30 from the hinge members 31. By providing the cushioning support material with a thickness dimension greater than the distance from the lowermost portion of the beams 28, 29 to the beams 26 and 27 when the beams are parallel, the engagement of the truck body with the cushioning support material causes the pivot pins 32 securely held by the bores 44 in the hinge members 31, to be lifted off the lower surfaces of the bores. Also, as is well known in the art, when the truck body 13 is moved to its lowered position and the telescoping cylinders 19 and 21 are fully collapsed, the hydraulic cylinders are released to a float position.

Accordingly, when the truck body 13 is moved to its lowered position, the entire weight of the truck body is transferred from the hinge assemblies 17 and hydraulic cylinders 19 and 21 to the body-frame interface provided by the cushioning support material between the beams 26, 27 and the beams 28, 29, wherein the latter are in parallel with the former. It will be appreciated that this cushioning support material is provided by the truck manufacturer in order to 1) cushion the mating surfaces between the beams 28, 29 of the truck body 13 and the beams 26, 27 of the truck frame 15, 2) provide a surface which lifts the truck's weight off the hinge assemblies 17 when the body is moved to its lowered position, thereby evenly distributing the truck's load along the length of the frame 15 and 3) allow for variations in parallelness between beams 26, 27 and beams 28, 29. As illustrated by the righthand embodiment of the hinge assembly in FIG. 3, the

oversized bores 43' of the hinge members 30 may be lined with a rubber-like material 45 and a sheathing 45a in order to dampen any excessive movement of the pivot pins 32 in the oversized bore and protect the wall of the bore from damage.

Because the thickness of the assembly comprising the fluid-filled tubings 47 and the metallic shields 49 is equal to the thickness of the cushioning material that they replace, the pivot pins 32 are lifted off the lowermost portion of the bores 43 when the truck body is moved to its lowered position. Accordingly, when the truck body 13 is lowered onto the parallel beams 26 and 27 of the truck frame, the entire weight of the truck body 13 and its load is transferred to the truck frame 15 by way of the interface provided by the fluid-filled tubings 47. As a result of the fluid-filled tubings 47 supporting the entire weight of the truck body 13 in its lowered position, an increase in liquid pressure sensed by the pressure sensors 51 which accurately represents the total weight of the truck body. Not only do the fluid-filled tubings 47 provide a mechanism for measuring the total weight of the load carried by the truck body, they also provide the cushioned support between the truck body 13 and the truck frame 15 previously provided by the truck manufacturer's cushioning support material.

Generally, the tubings 47 should be composed of material that is resistant to penetration by oil (oil is the most preferred liquid for filling the tubings). More importantly, the tubings 47 must not be susceptible to permanent deformation from the weight of the truck body 13. In particular, the tubings 47 should not include any type of braided wire that might permanently deform under external

pressure. An example of a tubing suitable for use in connection with the invention is the JAFIB fire hose manufactured by the Jaffrey Fire Protection Company, Inc. of New Hampshire. For any particular choice of hose, it must be wear and abrasion resistant. A modified fire hose may be used; an example of a preferred modified fire hose is a three-ply urethane fire hose (i.e., concentric layers of urethane, fiber and urethane) with an added inner lining of hose fiber with the fiber's inner diameter covered with a sealing material such as rubber.

It will be appreciated by those familar with off-road trucks that some manufacturers provide a cushioning support material between the truck body 13 and truck frame 15, but they do not provide a means to free the hinge assemblies 17 from supporting a portion of the weight of the truck body when in a lowered position. Such a hinge assembly is shown by the leftmost embodiment in FIG. 3 wherein the pivot pin 32 fits snugly within the bore 43''. In accordance with the invention, these types of trucks may be modified to allow all the weight of the body to be supported along the body-frame interface by machining small crescent profiles off the tops of the pivot pins 32 such that the profile of the pins is egg shaped. As illustrated by the modified pin 32 in Fig. 3a, this modification allows the hinge members 30 and 31 to disengage when the truck body is lowered onto the tubings 47, thereby enabling the pressure sensors 51 to measure the pressure from the full weight of the truck body.

In order to calibrate the fluid-filled tubings 47 which support the truck body 13 in its lowered position over the truck frame 15, a liquid (e.g., oil) of relatively low viscosity is pumped into the

tubings while the empty truck body is resting on the tubings, i.e., in its lowered position. Relatively low viscosity is chosen in order to ensure proper flow during winter temperatures. The pumping of the liquid is stopped when the beams 28 and 29 of the truck body 13 are parallel to the beams 26 and 27 of the frame 15. At this point there is still a slight amount of contact between the pivot pins 32 and the lower portions of the bores 43 in the hinge members 30. Therefore, there is still a slight amount of body weight supported on the frame 15 through the hinge assemblies 17. In order to lift the pivot pins 32 off the hinge members 30, additional liquid is pumped into the tubings 47 until the pivot pins 32 are visually lifted off the lowermost portions of the bores 43. Although there is some downward vertical movement of the inverted U-shaped metallic shields 49 as the truck body 13 is loaded, the movement is not sufficient to cause the pivot pins 32 to re-engage the bores 43 of the hinge members 30.

At each pressure sensor 51a-d associated with the fluid-filled tubings 47, the liquid pressure is converted to an electrical potential which is delivered to electrical circuitry, discussed hereinafter, to calculate a weight measurement. Referring to FIG. 4, each of the fluid-filled tubings 47 is preferably cut at its central area in order to provide two separate fluid-filled chambers. By cutting the tubings 47, each pressure sensor 51a-d at an end of a tubing 47 supplies the electronic circuitry with an independent pressure reading. By dividing each tubing 47 into two chambers, the corresponding four pressure readings can be manipulated to provide an indication of the weight distribution of the load, e.g., too much weight fore,

aft or side to side as will be discussed in greater detail hereinafter.

In alternative configurations of the tubings, each tube can be a unitary piece such as schematically shown in FIG. 5 or it may consist of a plurality of tubings of smaller cross-section as shown in FIG. 5a (these smaller tubes may be within a larger tube). Referring to FIG. 6, in order to provide an easily ascertainable amount of contact area between the fluid-filled tubings 47 and the shields 49, a contact plate 60 is secured to the bottom of the channel formed by the shields in the preferred embodiment of the invention. The tubings 47 are filled with fluid so as to provide a contact surface along the entire cross-sectional length of the plate 60. Also, the tubings 47 are free from contacting the side walls of the shields 49. By the tubings 47 only contacting the bottom surface of plate 60, the weight can be accurately determined, i.e., pressure x area = weight.

Turning to FIG. 7, a more detailed cross-section of the apparatus comprising the on-board weighing device is shown. A subassembly, comprised of welded portions 61a, 61b and 61c illustrated in FIG. 7, is provided for securing the on-board weighing device to each of the beams 26 and 27. The subassembly fits over each of the beams (beam 27 is shown in FIG. 7). In order to secure the subassembly on the beam 27, a flat plate 62 is butted against the lower surface of the beam 27 and fastened to the portions 61a and 61b of the subassembly by way of nuts and bolts 63a and 63b, respectively. Referring to FIG. 7a in conjunction with FIG. 7, outrigger pairs 64a and 64b are secured to the shield 49. Fitted between the pairs of outriggers 64a and 64b are bolt

assemblies 190a and 190b, respectively, which are secured to side portions 61a and 61b, respectively. Because of rods 191a and 191b extending between the outrigger pairs 64a and 64b, respectively, the shield 49 is restrained from accidently coming free from its position over the tubings 47. Upward movement of the shield 49 and the integrally attached outrigger pairs 64a and 64b will cause the rods 191a and 191b to engage the bolt assemblies 190a and 190b, respectively. At the same time, the shield is able to move downwardly in response to the weight of the truck body.

The subassembly 61a-c is fitted over the top of the beam 27 such that the planar horizontal surface portion 61c provides the supporting surface for the tubing 47. The horizontal surface is welded to the two wing portions 61a and 61b in order to allow the first portion 61c to fit over the top of beam 27 in much the same manner as a saddle on a horse's back. The shield 49 and plate 60 are fitted over the tubing 47 in the same manner as discussed in connection with FIG. 6. In order to provide horizontal stability for the tubing 47 and the shield 49, vertical guides 65a and 65b are integrally attached to opposing ends of the planar horizontal surface of portion 61c. The guides 65a and 65b cooperate with the side walls of the shield 49 to inhibit any side-to-side movement of the tubing 47. The dashed line indicated as 27' is included to indicate the beam 27 may be a square beam instead of the I-beam illustrated.

Referring to FIGS. 8, 8a and 9, an end clamp 68 at the end of each tubing 47 assures that the interface of the tubing 47 and one of the sensors 51a-d remains intact throughout the life of the on-board weighing device. As illustrated in FIG. 9, a

collar 70 retains the tubing 47 in a cavity formed by joining top and bottom portions 70a and 70b, respectively, of the collar 70. End clamp 68 has similar top and bottom portions 68a and b, respectively, and also a center portion 68c s shown in the exploded view in FIG. 8a. The end clamp portion 68c includes a centrally-tapped hole for receiving a threaded extension of one of the sensors 51a-d which join to secure and seal the end of the tubing 47. Because of the pressure exerted on the tubings 47 when they support the weight of the truck body 13, there is a substantial force acting at the ends of the tubings. Each end of the tubings 47 must be terminated in a manner which assures the tubing will not rupture. The metallic collar 70 restrains the end of the tubing 47 where it joins with the clamp 68 and one of the sensors 51a-d in order to prevent a rupture at the tubing-sensor interface provided by the end clamp 68. To further assure the tubing 47 remains sealed at the end clamps 68, very strong, high quality adhesives of commercial grade are added between the tubing 47 and the end clamp portions 68a,b and c in order to form a strong bond at the clamp-tubing interface. The adhesive is also added between the inner walls of the tubing at its end in order to aid in its sealing. As indicated by FIG. 8, bolts secure the respective upper and lower sections of both the end clamp 68 and the collar 70.

Referring to FIG. 10, in an alternative embodiment of the on-board weighing device according to the invention, the cushioning support material 52 remains on the parallel beams 26 and 27 to provide a cushioned interface between the truck frame 15 and the truck body 13, but each of the beams 28 and 29 of the truck body 13 is modified so that they include

the on-board weighing device as described in connection with FIGS. 1-4. The two pieces illustrated in FIG. 10, sections 29a and 29b of the beam 29, are joined by a plurality of bolts 57 extending along the length of the two-piece beam. The two pieces of beam 28 (not shown) are constructed and joined in the same manner. By providing a two-piece beam construction with tubing 47 or load cells (not shown) sandwiched between the two pieces, the total weight of the truck's load can be accurately measured in accordance with the invention, ie., without lifting the truck body 13 off the truck frame 15.

Although this alternative embodiment requires the modification of the truck body 13, there is no required modification of the truck frame 15 or the cushioning material, and therefore, there is no possibility of a structural weakening of the load's support surface (i.e., the truck frame). Moreover, since the modification of the truck body merely makes two pieces from what formerly was one piece, there is also little danger of reducing the structural integrity of the truck body. Specifically, the weight of the load is continuously distributed through the tubings 47 along the length of the interface between the two pieces of the truck body, thereby assuring that there are no high stress areas which might be susceptible to fracturing under heavy loads.

In some vehicle manufacturer's truck designs, when the truck body 13 is in its lowered position the weight of the truck body is supported at the back end of the body by way of the hinge assemblies and at the front of the body by way of a relatively small body-frame interface area. When the body is in its

lowered position, the body area intermediate these two support areas is suspended over the frame as shown in Fig. 12. For these types of truck bodies there is no cushioning support material along the length of the parallel beams of the frame. When the truck body is in its lowered position, the interface area 55 supports the beam 29 of the truck body 13 on the beam 27 of the frame 15 at the end of the body opposite the hinge assemblies 17, thereby preventing the body from being cantilevered. For these types of truck constructions, an on-board weighing device according to the invention is provided by positioning load sensors 57 and 59 at the interface area 55 and at the hinge assemblies 17, respectively, since these are the two points that support the truck body over the truck frame 15 when the body is in its lowered position. A particular example of a load cell suitable for use in connection with the embodiment of Fig. 10 is the fatigue-resistant load cell (models 3116 or 3152) manufactured by Lebow Assoc., Inc. of Troy, Michigan.

As an alternative to positioning the load cell 59 in FIG. 12 at the hinge assembly 17, the load cell may be located between the interface between beams 27 and 29 (indicated as 59' in FIG. 12) if the hinge assemblies 17 are modified, as needed, to provide a "floating" hinge pin as shown in FIG. 3a. With a floating hinge pin, the weight of the truck body will be fully supported along the interface between the beams 27 and 29 and, thereby, the load cells 57 and 59' will provide an accurate indication of body weight. As a further alternative, a shortened version of the on-board weighing device of FIGS. 1-9 may replace the load sensor 57 while maintaining the load sensor 59.

Referring to FIG. 13a, the off-road, heavy duty truck includes a pressure sensor added to the hydraulic line connected to the hydraulic cylinders 19 and 21; by providing a pressure measurement from the hydraulic line of the hydraulic cylinder 21, in addition to the pressure measurement provided by the on-board weighing device, a determination can be made of the weight distribution of the load over the front and rear axles 71a and 73a, respectively, by summing moments about the hinge assemblies 17. By summing the moments about the hinge assembly 17, the location of the center of gravity of the load carried by the truck body 13 can be determined. By determining the location of the center of gravity of the load carried by the truck body 13, the relative distribution of the total weight of the load over the front and rear axles can be determined.

In order to determine the axle loads, the truck 11 may be schematically represented as a horizontal line 74 in FIGS. 13a and 13b which passes through both front and rear axles. In practice, the vertical height of the load's center of gravity is not important; therefore, the moment equation about the hinge assemblies 17 (the vertical height of the hinge assemblies is also ignored) gives the one dimension of the location of the center of gravity of the load which is important in determining the axle loads, i.e., its location relative to the front and rear axles.

In order to determine the location of the center of gravity of the load along the length of the truck 11 as shown in FIGS. 13a and 13b, the truck body must be lifted slightly from its lowered position as shown by the distance h in FIG. 13b in order that the hydraulic cylinders 19 and 21 provide a pressure

reading indicative of the force required to pivot the truck body 13 about the hinge assemblies 17. By providing the horizontal line 74 with a calibration in predetermined units such as inches or feet, the horizontal placement of the center of gravity relative to the front and rear axles can be determined.

Since the hydraulic cylinders 19 and 21 are positioned at an angle Φ with respect to a vertical axis perpendicular to the horizontal line 74 in FIGS. 13a and 13b, the pressure reading from the pressure transducer associated with hydraulic cylinders 19 and 21 must be multiplied by cylinder area (to provide a force measurement) and by the cosine of the angle Φ in order to determine the vertical force at the cylinder hinge assembly 33. Although the angle Φ changes with the extension of the hydraulic cylinders 19 and 21, a predetermined value for the angle Φ can be stored in the memory of the processor associated with the on-board weighing device as discussed hereinafter since the truck body 13 need be raised only a slight amount (shown as the distance h in FIG. 13b) such that the angle Φ can be treated as a constant for purposes of determining the relative axle loads.

Once the vertical force at the cylinder hinge assembly 33 is determined, the equation for the moments about the body hinge assembly 17 and along the horizontal axis has only one unknown, i.e., the horizontal distance of the center of gravity from the body hinge assembly 17. The following equation expresses the relationship of the moments about the body hinge assembly 17:

$$(\text{Total Weight}) \cdot (C/G) - (\text{Cylinder Weight}) \cdot (\cos \phi) \cdot (y+z) = 0 \qquad (1)$$

wherein "Total Weight" is the most recent pressure reading from the on-board weighing device representing the load carried on the truck frame 15 multiplied by a predetermined constant to provide a force measurement, and C/G is the location of the center of gravity of the load projected onto the horizontal line 74; "Cylinder Weight" is the pressure from the pressure transducer in the hydraulic line to hydraulic cylinders 19 and 21 multiplied by the area of the cylinders; the angle ϕ is the angle formed by the longitudinal axis 75 of the cylinder 21 and a vertical axis 76 in FIGS. 13a and 13b; and $(y+z)$ is the distance on the horizontal line 74 between the body hinge assembly 17 and the cylinder hinge assembly 33. Solving for the location of the center of gravity, the equation is as follows:

$$C/G = \left[\frac{\text{Cylinder Weight}}{\text{Total Weight}}\right] \cdot (\cos \phi) \cdot (y+z) \qquad (2)$$

With the horizontal position of the center of gravity located, the load on each axle can be determined by solving for the axle weights using the sum of the moment arms about the axle and along the horizontal line 74. For the front axle, the sum of the moment arms about the rear axle provides an equation for solving for the load on the front axle. The equation for the moment arms about the rear axle is as follows:

$$(\text{Weight on Front Axle}) \cdot (w) - (\text{Total Weight}) \cdot (C/G-z) = 0 \qquad (3)$$

Solving for the weight on the front axle, the equation becomes,

$$\text{Weight on Front Axle} = (\text{Total Weight}) \cdot \left(\frac{C/G - z}{w}\right) \quad (4)$$

To find the load on the rear axle, the moment arms are taken about the front axle as set fo. h in the following equation:

$$(\text{Weight on Rear Axle}) \cdot (w) - (\text{Total Weight}) \cdot (w+z - C/G) = 0 \quad (5)$$

$$\text{Weight on Rear Axle} = (\text{Total Weight}) \cdot \left(1 + \frac{z - C/G}{w}\right) \quad (6)$$

The weight of the frame of the truck 11 bearing on the front and rear axles (i.e., the tare weight) can be added to the calculated weights in order to provide total weights bearing on the front and rear axles. To find the tare weights for the front and rear axles, the truck 11 may simply be weighed one axle at a time on a platform scale as in FIGS. 15a-b. In measuring this tare weight, the truck body 13 may be removed from the truck 11 or the weight of the body attributable to the front and rear axles may be subtracted from the weight recorded by the platform scale (FIGS. 15a-b). The resulting weight measurement may be stored in the memory of the electrical circuitry associated with the on-board weighing device as discussed hereinafter.

Since the horizontal distances represented by the values for w, x, y and z are known and since the pressure in hydraulic cylinders 19 and 21 is known when the truck body 13 is lifted slightly off the frame 15, the center of gravity for the load (weighed by the on-board weighing device) can be determined from equation two. Once the center of gravity for the load is determined, the distribution of the load between the front and rear axles,

71a and 73a respectively, can be easily determined from equations four and six.

Determination of axle loads can be made in off-road vehicles of other types using a similar approach as disclosed in connection with the off-road truck of FIGS. 13a-b. For example, a scraper vehicle 81, shown in its raised and lowered positions in FIGS. 14a and 14b, respectively, utilizes a pressure sensor in connection with its hoist cylinder 82 to estimate the front and rear axle loads of the scraper. A scraper vehicle loads ground material into its body by lowering an open end of the body into contact with the ground. As the scraper moves forward, the ground material is swept into the body of the scraper by way of the lowered opening. In other words, the bottom edge of the body scrapes the ground surface, hence the name "scraper".

The mechanism which lifts and lowers the body 83 of the scraper 81 are most clearly shown in FIGS. 14c-d. In its lifted or raised position, the hoist cylinders 82 (only one is shown) holds the body 83 off the ground. In order to prevent material from falling out of the body 83, a gate assembly 84 is provided to close the opening in the body 83 when it is in its lifted or raised position. Control of the gate assembly is provided by a linkage 85 in a well-known manner.

Referring back to FIG. 14a, longitudinal dimensions v, w, x, y and z of the scraper 81 are used to calculate an approximate axle load for the front and rear axles 86 and 87, respectively. In the same manner as used in connection with the axle load determination for an off-road truck, the moment arms about the front and rear axles serve as the tools to determine the axle loads. Unlike the off-road truck, the center of gravity for the load in the body 83 of the scraper 81 cannot be as easily determined. In the off-road truck of FIGS. 13a-b, the on-board weighing device

combined with a pressure sensor in the hoist cylinder system to find the center of gravity for the load. In the scraper 81, the center of gravity for the load of the scraper body 83 must be approximated. For illustration, the scraper 81 in FIG. 14a is assumed to have a center of gravity at the pivot point 88 of the pivot arm 89. With the location of the center of gravity assumed, the total weight of the load can be determined and, as a result, the forces on the axles can also be determined.

To calculate the axle loads, the weight of the load must first be determined. Converting the pressure in the hoist cylinder 82, while the body 83 is in a raised position, to a force allows the moment arm about the front axle to be solved for the weight of the body 83. Since the hoist cylinder 82 is at a slight angle Φ from vertical, the force F_2 must be multiplied by cos Φ to find the vertical force for calculating the moment arm about the front axle. The equation is as follows:

$$0 = (\cos \Phi \cdot F_2 v) - F_1 y \qquad (7)$$

$$F_1 y = F_2 v \cdot \cos \Phi$$

$$F_1 = F_2 v \cdot \frac{\cos \Phi}{y}$$

where F_1 is the weight of the body 83 and F_2 is the force at the hoist cylinder 82 lifting the body.

Once the weight of the load is determined, the axle loads are easily calculated as follows:

$$0 = F_1 y - F_4 w \qquad (8)$$

$$F_4 = F_1 \frac{y}{w}$$

where F_4 is the weight on the rear axle 87, and

$$0 = F_1 z - F_3 w \qquad (9)$$

$$F_3 = F_1 \frac{z}{w}$$

where F_3 is the weight on the front axle 86. The foregoing calculation may be implemented by the circuitry and flowcharts discussed in connection with FIGS. 16, 17 and 18a-r. Although the flowchart discloses steps for calculating the axle loads for a dump body truck using data gathered by the on-board weighing device and data from hoist cyclinders, it will appreciated from the foregoing scraper discussion that similar software steps may be used in connection with the circuitry of FIGS. 16 and 17 to calculate scraper body weight and axle loads.

As briefly mentioned earlier, the platform scale of FIGS. 15a-b may be used to measure the tare weight for the front and rear axles of the off-road truck of FIG. 13 a-b or the scraper of FIG. 14a-d. The tare weight is stored as a "hard number" in an electronic memory and added to the calculated axle weights from the load in order to arrive at the total axle loads. An exemplary platform scale may be implemented by appropriate changes to the on-board weighing device. Specifically, referring briefly to FIGS. 15a and 15b, an inexpensive platform scale is illustrated using tubing, sensors and support structure similar to that used for the on-board weighing device. A plurality of tubing lengths 90 are positioned under a surface plate 91. In order to hold the surface plate 91 in a stable position to prevent sliding, two rows of pins 92 integral with the plate are received in a corresponding two rows of sockets 93 integral with a bottom plate 94. Sensors (not shown) are attached to one end of each tubing 90 or, if the tubing is crimped at its center, the sensors may be attached to each end of the tubings.

A contact plate 95 interfaces the tubings 90 to the surface plate 91. The contact plate maintains a constant area of contact between the surface plate 91 and the tubings 90. In order to prevent the tubings from wandering on the bottom plate 94, each tubing 90 is bordered along its length with projections 96 from the bottom plate 94. In operation, the platform scale is recessed into the ground in order that the surface plate 91 is flush with the ground. In order to weigh, for example, the front or rear axles of the truck in FIGS. 13a and 13b, the truck operator merely drives the truck over the platform such that all front or rear tires bear on the surface plate. The pressure increase in the tubings 90 is sensed by the pressure sensors and circuitry similar to that illustrated in FIG. 16 adds the individual pressure readings and converts the sum to a weight measurement.

Referring now to FIG. 16, the electrical circuitry which completes the weighing system by manipulating the pressure data received from the on-board weighing device is provided by a sensor processing unit 101 (previously referred to as the "processor means"). Preferably, the unit is microprocessor based. As will be apparent to those skilled in the art, the sensor processing unit 101 includes a central processing unit 103 (hereinafter CPU 103), an associated program memory in the form of a PROM 105 and read/write memory RAM 107. A first memory portion of the RAM 107 functions as a first storage array for pressure readings from the on-board weighing device (hereinafter referred to as an ARRAY I). ARRAYS II and III are for summaries and archives, respectively. The storage arrays will be discussed in greater detail in connection with FIG. 16a. A particular example of a CPU suitable for the sensor processing unit 101 is the Z80 microprocessor manufactured by Intel Corporation of Santa Clara, California. Another possible microprocessor is the 8085 from Intel.

In conventional fashion, emanating from the CPU 103 is a microcomputer bus 109. The bus 109 is connected to the memories 105 and 107 as well as to input ports 113 and 115. The microcomputer bus 109 communicates to a visual display unit 117 and a printer 119 by way of a display drive 120 and a printer drive 121, respectively. In order to provide the sensor processing unit 101 with the operator and truck number, the microcomputer bus 109 is connected to a keyboard 122 by way of an interface 124. The keyboard 122 also provides the sensor processing unit 101 with a conversion factor for converting the stored pressure readings to weight values in tons, pounds or kilograms. Also, communicating to the sensor processing unit 101 by way of the microcomputer bus 109 is a time clock 126. In order to provide a communications path between the sensor processing unit 101 and the printer 119, the visual display 117, the time clock 126 and the keyboard 122, the microcomputer bus 109 includes data lines, memory lines and control lines.

In order to measure the axle loads of the truck 11, an interrupt instruction instructs to the sensor processing unit 101 to execute the software routine for calculating the axle loads from pressure readings of the on-board weighing device and the pressure sensor 139. As illustrated in FIG. 16, the interrupt signal is activated by the truck operator by way of a push button 142. As mentioned in connection with FIG. 13, the interrupt is activated only after the operator has slightly raised the truck body 13 by extending the hydraulic cylinders 19 and 21.

As previously mentioned, hauling parameters derived from the on-board weighing device and processed by the sensor processing unit 101 can be identified with particular I.D. numbers, thereby providing an indication of truck and operator performance. It will be appreciated by those skilled in the art that keyboard 122 can also serve as an

I.D. input for mechanics, oilers and other maintenance personnel in order to record the maintenance work on the truck (in a fifth array of RAM 107) and the identity of the individual who performed the maintenance. In connection with recording a user's identification number, the sensor processing unit 101 controls an ignition lock-out device 127 which allows the truck 11 to be st·ted only if a correct I.D. number has been received. In order for the sensor processing unit 101 to detect changes in operator numbers when the truck is not running (for instance, a change from a mechanic's I.D. to an oiler's I.D.), power is continuously applied to the sensor processing unit. In a well-known manner, the sensor processing unit 101 r··erts to a stand-by mode when the truck is turned off in or··r to reduce its power consumption and thereby prevent a serious drain on battery pow·r. In the stand-by mode, the sensor processing unit periodically powers up and looks to see if activity has occurred at its sensor inputs. If, for example, a new I.D. number has been entered into the keypad 122, the unit stores the new number and prints and/or displays a summary of data while the truck 11 was under control of the previous number. (The foregoing display of summary data will be explained in greater detail in connection with FIG. 18i). As an alternative to entering the I.D. number by way of the keyboard 122, an encoded card may be used by the operator in connection with a card reader.

As will be expla··ed in greater detail in connection with the flowchart of Figs. 18a through 18r, the sensor processing unit 101 and its associated electronics are energized in response to engine start-up. An engine start-up energizes the CPU 103 which in turn initializes the program memory, thereby beginning the program routine of the flowchart in Figs. 18a-18r.

Each of the various alternative embodiments of the on-board weighing device provide the circuitry of Fig. 16

with an analog electrical signal which is linearly proportional to the pressure exerted by the tubing fluid on the device's sensors 51a-d (tubing in the preferred embodiment of the invention or load cells, strain gauges or like pressure sensing transducers in alternative embodiments of the invention). Since the pressure of the tubing fluid is linearly proportional to the weight of the truck body 13 and since the sensors 51a-d reflect the tubing fluid pressure in a linear fashion, the analog signals from the sensors are proportional to the weight of the truck body.

Sensors 135, 137, 138 and 139 cooperate with the on-board weighing device in order to provide information necessary for the sensor processing unit 101 to provide output information to the truck operator such as the loads on the front and rear axles as discussed in connection with FIGS. 13a and 13b. The gear sensor 135 is used in connection with a record keeping function performed by the software of the sensor processing unit 101 such that, in response to a gearshift by the truck operator, certain information stored in RAM 107, and derived from the on-board weighing device, may be manipulated (as explained more fully in connection with the flowcharts of FIGS. 18a-18r). In a similar manner, the dump sensor 137 is utilized by the sensor processing unit 101 to manipulate stored data from the on-board weighing device when the dump sensor 137 indicates that the truck body 13 has been pivoted to its dump position. Preferably, the dump sensor is a mercury switch mounted to the truck body 13 in order that it may respond to the change in the body's position as a load is dumped. Unlike mechanical switches, which are used in all prior apparatus, to the best of applicant's knowledge, a mercury switch when utilized as a dump switch offers the highly advantageous characteristic of being isolated from the ambient conditions. Therefore, the harsh conditions often encountered by off-road vehicles will not cause a rapid deterioration of switch performance.

The distance sensor 138 is used by the sensor processing unit 101 to provide the distance measurement in connection with the calculation of tons-miles per hour units used to indicate the degree of tire wear or use. Finally, the pressure sensor 139 is located in the hydraulic line of the hydraulic cylinders 19 and 21 and provides a pressure measurement for use in connection with calculating the axle distribution of the total load. The interaction between the sensor processing unit 101, the on-board weighing device and each of these sensors is discussed in greater detail hereinafter in connection with the flowcharts of FIGS. 18a-18r which disclose the program routine for the sensor processing unit. All of the foregoing sensors are analog devices which require analog-to-digital conversion as represented by A/D block 130. As with A/D converter 129, the circuitry comprising these converters is conventional and, therefore, will not be discussed in detail.

In order to provide a visual indication of the unused weight capacity of the truck body, the sensor processing unit 101 is connected to a load indicator 140 by way of the microcomputer bus 109. The load indicator 140 includes a plurality of lights 140a-e stacked one above the other. By activating a particular light on the indicator 140, the sensor processing unit 101 is able to signal the operator of the loader the proportion of a bucket load which may safely be added to the truck without exceeding the weight capacity of the truck. From a predetermined maximum weight capacity for the truck stored in the sensor processing unit 101, the sensor processing unit determines the remaining load capacity of the truck body 13 from the current load as measured by the on-board weighing device.

If the truck is loaded by a continuous flow of material, instead of the incremental increase provided by the bucket of a front end loader, the indicator 140 may provide a real time indication of the percentage of

remaining load capacity. For example, if a conveyor belt or hopper (not shown) are used to load the truck 11, the sensor processing unit can compare current load data with a maximum load and activate an appropriate light 140a-e depending on the fraction of remaining capacity. In this example, it is contemplated the indicator light 140a corresponds to a remaining capacity of 20%, indicator light 140b corresponds to a remaining capacity of 15%, etc. The sequencing of the lights 140a-e as the truck approaches full load will aid in the anticipation of when the continuous flow should be cut off in order to avoid overflow, yet assure a maximum load. The particular programming steps for providing a real time indication of remaining capacity is not set forth in the steps of the flowcharts in FIG. 18a-r, but the modifications required to the program for continuous flow loading will be evident to a programmer from the flowchart description of steps responsive to incremental loading.

In connection with the indication of the remaining weight capacity of the truck, the sensor processing unit 101 determines the average incremental increase in the weight of the truck body 13 with each bucket from a loader, thereby indicating the average weight of a bucket load used to load the truck body. If the average weight for a bucket is less than the remaining weight capacity of the truck body 13, then the green light 140a of the indicator 140 will be activated by the sensor processing unit 101. If the average weight of a bucket is greater than the remaining load capacity of the truck body 13, the sensor processing unit 101 determines what fraction of the average weight of a bucket the remaining weight capacity most closely approximates.

Specifically, a three-quarter light 140b is activated if the remaining weight capacity of the truck body 13 has a value between three-quarters of an average weight for a bucket and the total average weight for a bucket. In order

to light the one-half light 140c, the remaining weight capacity of the truck body 13 must be between one-half and three-quarters of the average weight of a bucket. Similarly, in order to light the one-quarter light 140d the remaining weight capacity must be between one-quarter and one-half of the average weight of a bucket. Finally, for the red light 140e to be activated and thereby indicate the truck body 13 is full, the remaining weight capacity of the truck body 13 (as determined by the pressure reading from the on-board weighing device) must be less than one-quarter of the average weight of a bucket. The manipulation of the indicator 140 by the sensor processing unit 101 in response to pressure readings from the on-board weighing device will be explained in greater detail in connection with the program routine of the sensor processing unit illustrated by the flowcharts in FIGS. 18a-18r.

A transceiver 150 is mounted to the truck 11 in an appropriate and convenient location in order to enable the sensor processing unit 101 to communicate with a central computer. As will be explained in greater detail hereinafter, the central computer serves as a traffic cop to control the flow of trucks between load and dump sites.

Turning now to the calibration and programmed operation of the on-board weighing device and the sensor processing unit 101, initialization of the system will be explained with reference to the preferred embodiment of the invention. In connection with the alternative embodiments of the on-board weighing device, the modifications required to calibrate the sensor processing unit 101 and the modifications required to the program memory will be obvious to those skilled in the art from the following detailed description of the calibration of the on-board weighing device and programmed operation of the sensor processing unit for the preferred embodiment of the invention.

The calibration of the on-board weighing device may be illustrated by considering the case of a truck body 13 having a ten-ton empty weight and a 50-ton load capacity. In the preferred embodiment of the on-board weighing device, if the tubings 47 have a total combined effective surface area of 500 sq. in., the pressure developed by the empty truck body 13 is 40 psi. A fully loaded truck body 13 (i.e., 50 tons) develops a pressure of 240 psi. By utilizing the pressure sensors 51a-d in connection with the tubings 47, an analog voltage output may be obtained which accurately measures pressures between 0 and 300 psi. The analog voltage output of the sensors 51a-d varies between two and six volts. For the truck body 13 having an empty weight of ten tons and a full load weight of 50 tons, the analog voltage from the sensors 51a-d is 2.53 volts for the weight of the empty truck body and 5.20 volts for the full load weight. Therefore, the the voltage outputs of the sensors have a voltage range of 2.67 from no load to full load volts.

At the analog-to-digital converter 129 (hereinafter referred to as an A/D converter) the output voltage from each of the pressure sensors 51 a-d is converted from an analog voltage to a digital signal. The output from the A/D converter 129 is a binary-coded decimal number which -- since it is proportional to the analog voltage from the pressure sensors 51a through 51d -- is also proportional to the pressure on the tubings 47. Since the voltage output range of the pressure sensors 51a-d is between two and six volts, the A/D converter 129 converts two volts to a binary-coded decimal number close to zero (when the truck body is lifted off the sensors thereby creating a zero load condition) and correspondingly converts six volts to a binary-coded decimal number of approximately 255.

For the exemplary truck 11 having a ten-ton empty weight for the truck body 13, the foregoing calibration

procedure provides, at the binary-coded decimal output of the A/D converter 129, a decimal number of 34 when the truck body is in its lowered position. In comparison to the decimal number of 34 which represents an empty load, for a full load of 50 tons the output of the A/D converter 129 is a binary-coded decimal number of 204. Therefore, a decimal range of 170 represents all truck body loads from empty to full. Therefore, with a pressure range of 200 psi (corresponding to a weight range from no load to full load) a range of 170 in the binary-coded decimal number from the A/D converter 129 gives a resolution of approximately 1.18 psi per decimal number.

In order to calibrate the on-board weighing device for measuremert in an appropriate unit of weight (i.e., tons, pounds or kilograms), a conversion factor, which corrects for the contact area between the plate 60 (FIG. 6) and the desired units of weight, is manually set into the keyboard 122 in Fig. 16 and converted to a binary-coded decimal number by conventional circuitry associated with the keyboard. This binary-coded decimal number is delivered to the CPU 103 by way of the interface 124. At the CPU 103, the conversion value is multiplied with a binary-coded decimal number representing the previously calculated net pressure for the truck body. The resulting binary-coded decimal product represents the numerical value of the net weight of the truck body in tons, pounds or kilograms, depending on the conversion factor chosen. For example, the net pressure calculated from the pressure sensors 51a-d for a full load condition corresponds to a binary-coded decimal number of 170. The CPU 103 multiplies the binary-coded value of 170 by the binary-coded decimal number from the keyboard 122.

In order to obtain an accurate measurement of the pressure on the four isolated lengths of the tubings 47, the sensor processing unit 101 reads the voltage 16 times in

succession from each pressure sensor 51a-d. In order to obtain one pressure value for each sensor 51a-d, the 16 readings are averaged. Each pressure sensor 51a-d is read and averaged before the next sensor is read and averaged. When all of the pressure sensors 51a-d have been read and their 16 separate readings averaged, the four average readings are themselves averaged to obtain one pressure measurement for the truck body 13. Since the net weight of the truck body 13 is the weight of interest, the tare pressure (stored in memory as a predetermined pressure) is subtracted from the average pressure reading of the pressure sensors 51a-d to obtain a net pressure reading. The net pressure reading corresponds to the weight of the load carried by the truck 11 in its truck body 13. This reading is stored in ARRAY I and is manipulated in accordance with the program memory for the CPU 103 contained in the PROM 105.

In order to convert the foregoing pressure readings to a weight reading, the effective area of contact between the tubing 47 and the plate 60 (see FIG. 7) must be multiplied. The pressure data from the sensors 51a-d represents weight per unit area. Multiplying the effective contact area by the pressure data results in data indicative of weight. Two methods may be used to find the weight - 1) the average pressure may be multiplied by the total effective area for all the plates 60 of the on-board weighing device or 2) add the separate pressures from each of the sensors 51a-d and multiply the sum by the effective area of only one of the plates 60. From empirical study, applicant has discovered that the surface area of the plate 60 is not the precise area used to multiply with the pressures. A slightly modified, enlarged surface area is required in the calculation of weight. The degree of enlargement is determined empirically. Of course, the pressure x area product may also require conversion to

provide the appropriate weight units, e.g., pounds, kilograms, etc.

For the foregoing calculation of weight, the effective area of contact between the tubing 47 and the plate 60 is considered to be the same for each sensor 51a-d. If the specific system design results in unequal areas, each pressure and area must be treated separately. Therefore, if the four lengths of tubings 47 in FIGS. 1-4 include two short foreward sections and two long aft sections, the two forward sections must be treated separately from the aft sections in order to provide a meaningful single weight calculation.

In order to record the relevant data provided by the on-board weighing device and the electronic circuitry of FIG. 16, the RAM 107 is organized to not only include the miscellaneous temporary storage (e.g., status flags) required for normal software operation, but the RAM also includes arrays of data cells for storing time and pressure data to provide a chronological record of truck and operator performance and to provide a data base to extract further data indicative of performance. Referring to FIG. 16a, the RAM 107 is schematically illustrated as including at least a miscellaneous storage area and seven arrays.

ARRAY I provides storage locations for a plurality of consecutive net pressure values calculated from the pressure sensors 51a-d of the on-board weighing device. Also in RAM 107, storage locations are provided for cataloging summaries of hauling parameters wherein the summaries are indexed by operator number in order that the performace of each operator of the truck 11 can be quantified. For example, ARRAYS II and III are provided in RAM 107 wherein the ARRAY II collects summaries of hauling parameters for a time duration measured from the time a particular operator number is entered into the system until the number is changed. Entry of a particular operator number may identify a certain

cell in the second array for receiving summaries of hauling parameters, thereby identifying the summaries with the operator. By providing a non-volatile memory for the RAM 107, an ARRAY III serves as an archive for the summaries in ARRAY II, thereby providing a record of operator performance for a period of time including multiple uses by the operator, e.g., a month, quarter or year.

A fourth array, ARRAY IV, provides a storage area for recording maintenance work on the truck. Entry of a user I.D. number indicative of maintenance personnel rather than drivers are stored in ARRAY IV together with relevant data such as time under control of the maintenance number. Two additional arrays, ARRAYs V and VI store date useful in evaluating the performance of an off-road, heavy duty truck and its loader. As will be discussed in greater detail hereinafter, ARRAYs V and VI store data relating to the weight of each bucket added by the loader and the real time of each bucket addition. The purpose and manipulation of these stored values in ARRAYs I-VI will be discussed in connection with the flowchart of Figs. 18a-18r.

Finally, ARRAY VII is an area for storage data to be downloaded from the on-board system to a remote central location for creating a historical file. As will be apparent from the discussion in connection with the flowcharts of FIGS. 18a-r and 20a-b, relevant data can be either or both displayed on-board and downloaded to a central computer. If downloading is a selected option, the data is temporarily stored in ARRAY VII for transmission in response to receiving an appropriate control signal from the central computer.

In a simpler, less costly device, the circuitry of FIG. 16 may be replaced by a mechanical weight indicator 169 such as the one shown in FIGS. 17a-c. The sensors 51a-d are removed from the tubings 47 and the oil is continuous from each of the tubings to one of the piston chambers 170a-d.

Within each chamber 170a-d is a piston 171a-d as exemplified by the piston in FIG. 17c, shown in perspective. Each piston 171a-d is disk shaped and seals the chambers 170a-d into top and bottom volumes with the aid of O-rings 172a-d.

Since the weight of the truck body 13 is proportional to the sum of the pressures from the plurality of tubings 47 of the on-board weighing device, the mechanical weight indicator 169 adds the separate pressures and displays the total pressure by way of a conventional pressure gauge 175. Once the system is calibrated, the pressure gauge 175 may be supplemented with a weight scale such that weight can be read directly from the gauge. It will be appreciated from the following description that addition pistons 171 and piston chambers 170 may be easily added to the indicator 169 if more pressure inputs are required.

Referring to FIG. 17b, a plurality of pistion chambers 170a-d are stacked one above the other and, they include pistons connected by longitudinal shafts 176b-d as shown. Each of the shafts 176b-d communicate the force from the piston below it to its piston. Correspondingly, this latter piston adds the force on it from the previous piston to the force from the oil pressure and passes the sum to the next piston above it by way of its shaft 176, etc. The last piston has the sum of all the forces from the pressures on the other pistons below it. Since the lowermost piston 171a does not have a piston below it, it does not require a shaft 176.

In order for the full force of one piston to be transferred to the next piston, the top volume of each piston (except for the last or uppermost piston) is vented to the atmosphere through vents 177a-c. Of course, the oil intake ports 178a-d are located in the bottom volume of each chamber 170a-d. In order to separate the bottom oil-filled volume from an adjacent top, air-vented volume, chambers 170a-c include disk sections 179a-c, respectively. These

sections include central bores 180a-c, respectively, for receiving the shafts 176b, c and d. Each central bore is sealed by a gasket. An annular groove 181 in the ends of each of the chambers 170a-d receives O-rings in order to provide a sealed indicator 169. Each of the disk sections 179a-c include annular recesses on their top and bottom surfaces for receiving the cylindrical chambers 170a-d.

In its assembled state, the mechanical weight indicator 169 is capped by top and bottom plates 182 and 183, respectively. A plurality of rods 184 in FIG. 17a extend the length of the indicator 169 and join the top and bottom plates 182 and 183. Threaded ends of the rods 184 receive nuts for securing the entire assembly.

In order to equalize pressure between input lines during set up of the indicator 169, valves 185a-c interconnect the input lines from the on-board weighing device. During set-up, the valves 185 a-c are opened and the fluid pressure is allowed to equalize. The valves 185a-c are then turned off and, they remain off during normal operation. In each of the lines from the tubings 47 is a flow restrictor 186 for protecting against sudden changes in pressure (i.e., spikes) from reaching the gauge 175. Also on each input line is a air column 187 for protecting the on-board weighing device from possibly drawing a vacuum in the event of a significantly uneven distribution of weight. The top chamber 170d is filled with fluid in both its top and bottom volumes in order that the added pressure can be passed to the pressure gauge 175 by way of the top volume and the output port 189.

In a simple system, the mechanical weight indicator may be located off the truck and at a stationary site. For example, where the loading equipment is stationary during loading, a coupling between the on-board weighing device and the stationary mechanical weight indicator may allow the operator of the loader to remotely monitor the weight of the

vehicle load without the need for relatively expensive transceivers. Obviously, in such a system, the sensors 51a-d are absent and the coupling between the on-board weighing device and the mechanical weight indicator is simply a conduit for communicating the pressurized fluid from the truck to the statinary location.

In order to allow the loaded vehicle to move away from the loading site, the coupling between the on-board weighing device and the mechanical weight indicator 169 includes a quick disconnect device of conventional design. In operation, the vehicle is moved into position for loading and the male and female members of the quick disconnect device are joined so as to allow pressure from the on-board weighing device to be directly transferred to the stationary mechanical weight indicator 169. Since the loading equipment is stationary, the indicator 169 is preferably mounted directly to the loader so that the loader operator can monitor the increasing weight of the load. When a full load is indicated, the quick disconnect device decouples the mechanical weight indicator 169 and the on-board weighing device so that the truck may move away from the loading site and allow a new truck to be positioned for loading. The new truck is coupled to the mechanical weight indicator 169 as before and the foregoing steps are repeated. An obvious variation to the foregoing hydraulic system would be the upgrading of the system to an electrical system wherein the sensor 51a-d are present on the on-board weighing device and a transmitter porivides the means to communicate the pressure data to an electronic weight indicator located at the loader. Of course, a simplified version of the sensor processing unit 101 is necessary in order to prepare the pressure data for transmission. The stationary weight indicator may be merely a receiver of the data which converts the transmitted pressure data to a weight display for the operator of the loader.

Referring now to the flowchart of Figs. 18a-18r, the main program of the sensor processing unit 101 for executing all aspects of the invention is illustrated by the flowchart in FIGS. 18a-18e. Various subroutines are called from the main program for executing particular aspects of the invention. These subroutines are illustrated by the flowcharts in FIGS. 18f-r. Although these flowcharts are intended to be complete for an operating system, it will be understood that obvious modifications may be made to the program if a user wishes to use less than all aspects of the invention or, in the extreme, simply wishes to transmit pressure data to a remote site as briefly discussed in connection with FIGS. 17a-c.

For the purpose of reducing the complexity of the flowcharts, the multiple steps required to calculate a single pressure value for the pressure sensors 51a-d as described above are treated in the steps of the flowchart as a single step. It will be understood, therefore, that each step requiring the sensor processing unit 101 to read the pressure of the truck body requires the voltage signal from each of the sensors 51a-d to be read in accordance with the following protocol: 1) reading each sensor 16 times in succession, 2) averaging the 16 readings, and 3) averaging the averaged readings from all the sensors in order to obtain a single averaged reading.

Upon starting the truck, the sensor processing unit 101 receives power and starts the processing steps of the flowcharts. It begins by initializing required values at step 210. From step 210, the sensor processing unit 101 moves to step 230 where it reads the time and date from the time clock 126 of the CPU. Next, as indicated by step 240, the date, truck identification number, time and operator identification number are printed by printer 119 or transferred to ARRAY VII for later transmission via transceiver 150. (The truck I.D. number has been previously

placed in permanent memory.) As will become more apparent in connection with the remaining explanation of the flowchart steps, virtually all data identified for an output may be transferred to ARRAY VII in order to download the data to a remote location. Radio link downloading will be discussed in greater detail in connection with FIGS. 19a-c and FIGS. 20a-b. The operator identification number is obtained from the keyboard 122 as indicated by step 250. At step 260, a count is preset to a maximum count in order to control later sequencing of the software as explained more fully hereinafter.

After the truck has been turned on and the sensor processing unit 101 initialized in steps 210 through 260, the program moves to the main program loop at step 269 where the distance recorded by the distance sensor 138 is added to a previously calculated total distance in order to update the total distance traveled by the truck From step 269, the program calls a Read Pressure Subroutine (FIG. 18h) at step 270 wherein the unit reads the pressure from the pressure sensors 51a-d and calculates an average pressure in the manner previously described. In addition, the subroutine also calculates a fore, aft and side-to-side pressure for use in connection with other subroutines as explained hereinafter.

In step 275, the program compares the stored operator number with the current operator number entered into the keyboard 122. If the number is different, the new operator number is stored and the program calls the Operator Summary Subroutine at step 277 for analyzing hauling parameters measured during operation of the truck 11 while under the control of the previous operator. The Operator Summary Subroutine is discussed in greater detail in connection with FIG. 18i. After the Operator Summary Subroutine has been executed or if a change in operator number did not occur in step 275, the program moves to step 280.

In step 280, the predetermined value for the tare pressure is subtracted from the average pressure calculated in step 270 in order to obtain a net pressure value. Since the tare pressure represents the weight of the empty truck body, the net pressure represents the weight of the load carried in the truck body 13. From step 280, the sensor processing unit 101 moves to step 285 (FIG. 18b) where it is determined if the net pressure value is less than zero. If the net pressure is found to be less than zero in step 285, the program branches to step 286. In step 286, the program zeros the net pressure and bucket pressure (bucket pressure will be explained hereinafter in connection with the Load Analysis Subroutine, FIG. 18k). At step 289, the net pressure is stored in the first location of ARRAY I, i.e., ARRAY I(1). The most recent 16 net pressure values are stored in ARRAY I. These 16 values are averaged in step 300 (Fig. 18b) in order to obtain a time averaged net pressure.

In step 304, the program checks to determine if the operator has activated the push button 142 (FIG. 16) to indicate that the axle loads should be calculated. If the push button is pressed, the program branches the main program and executes the Axle Load Analysis Subroutine in step 305. As will be explained in greater detail in connection with FIG. 18p, the Axle Load Analysis Subroutine utilizes the net pressure reading for the truck body and the net pressure from the pressure sensor 139 (FIG. 16) to determine the loads on the front and rear axles.

Referring to FIG. 18c at step 380, the sensor processing unit 101 determines whether a gear shift has been sensed by the gear sensor 135. If it has, the program branches to step 390. In step 390, the sensor processing unit 101 commands the printer 119 to print (or to store in ARRAY VII) 1) the gear from which the truck has shifted, 2) the most recently calculated average net weight, 3) the time spent in the previous gear and 4) the distance traveled in

the previous gear (derived from the distance sensor 138 in FIG. 16). Although not shown in FIG. 18c, a flag may be set in step 390 indicating a gear shift for use in connection with downloading data to a central computer discussed in connection with FIGS. 19 and 20. If the truck's gears have not been shifted in step 380 or after completion of the printing function by the printer 119 in step 390, the sensor processing unit 101 determines at step 395 whether the time clock 126 is to be corrected (e.g., change to or from daylight savings time).

If the time is to be corrected, the program branches to step 396 where the time correction is executed. From steps 395 or 396, the program moves to step 400 and determines whether the dump sensor 137 has been activated. If the dump sensor has not been activated at step 400, the program branches to step 405 to decide if 0.1 seconds have elapsed since leaving step 304 and entering step 405. Since step 405 returns the program to step 380 if 0.1 seconds has not elapsed, the delay gives the sensor processing unit 101 an adequate time window for sensing the activation of the dump sensor 137 at step 400 before proceeding further in its program. If 0.1 seconds has elapsed in step 405, the program branches back to step 269 (Fig. 18a).

If the dump sensor 137 is determined to be activated in step 400, the program moves to step 406 wherein a Dump Subroutine is called which summarizes pertinent data of the haul cycle. In addition to identifying, calculating and printing different parameters for a single hauling cycle in the Dump Subroutine, it will be appreciated that the data gathered by the sensor processing unit 101 from the on-board weighing device and the associated sensors may be stored in ARRAY II for a number of hauling cycles in order to provide daily totals or averages of an operator such as, for example, the total tonnage hauled per day, the number of loads hauled per day, the average load hauled on a

particular day and the average elapsed time for a haul cycle. The Dump Subroutine is more fully explained in connection with FIG. 18r. From step 406, the program calculates the net pressure in step 410. As indicated in step 410, the resulting single pressure value is stored in the RAM 107 at a location designated for storage of a body-up pressure reading (i.e., a pressure reading corresponding to the truck body raised off the on-board weighing device).

In order to provide an indication for other parts of the program that a dump has occurred, a dump flag is set in step 420. This signal, together with a gear change signal and a load signal (discussed in connection with FIGS. 18k-m), provide sufficient information to a central computer for it to control the distribution of trucks 11 to the loader 160 in a manner to minimize load cycle time. This aspect of the invention will be discussed in greater detail in connection with FIGS. 19a-b and FIGS. 20a-b.

In steps 430 and 435, a calculation is performed to update the recorded amount of tire use. In step 430, the distance traveled since the last calculation (the last calculation was taken when the truck began loading as will be explained in connection with the Load Analysis Subroutine of FIGS. 18k-m) is multiplied with the total truck weight, i.e., the measured body weight plus the tare weight of the truck. In step 435, the "ton·mile" data from step 430 is summed with prior "ton·mile" data. The total ton·mile data provides an indication whether the tires of the truck 11 are wearing in accordance with their ton·mile rating. This data can be very important to a mine operator since reliable data regarding tire wear is otherwise unavailable and since replacement of worn tires is expensive. A calculation for ton·mile is executed by the sensor processing unit every "segment" of a load cycle for which there is a change in body weight; that is, at the end of a haul after the truck

has traveled from loader to dump site and at the beginning of a haul after the truck has traveled from the dump site to a loader. The time for the current segment of the load cycle is stored in step 440. The elapsed time indicates how long it took for this load to be delivered to its destination, i.e., from last dump to present dump.

By printing in step 450 (or storing in ARRAY VII for later transmission) the current average net weight (calculated in the subroutine of Fig. 18f) in response to activation of the dump sensor 137, the sensor processing unit 101 provides a hard copy of the truck's load immediately before the load is dumped by the pivoting of the body about hinge assemblies 17. The elapsed time for this load cycle is also printed. The current time is read in step 455. Finally, if it is determined at step 460 that the current time is greater than the last full hour of the time last read in step 460 plus one, the CPU 103 commands the printer 119 to record the time of the dump in step 470. In order to initialize step 460 for its next execution, step 475 sets the present whole hour equal to the previous hour.

Referring to FIG. 18d, in order to re-initialize the sensor processing unit 101 after a load has been dumped, the net pressure array, i.e., ARRAY I, is filled at all of its 16 locations with the body-up pressure calculated during step 410. After this "packing" of ARRAY I in step 480, the sensor processing unit 101 reads the pressure at the pressure sensors 51a-d in step 490 in accordance with the same procedure as previously described. At step 500, that pressure value is stored in one of the storage cells in ARRAY I, thereby replacing one of the body-up pressures "packed" into the array. From the 16 values in ARRAY I, an average pressure is calculated at step 510.

At step 520, the sensor processing unit 101 determines if the average pressure calculated in step 510 is greater than the body-up pressure plus a constant. The constant is

added as a buffer in order to ensure the truck body 13 is lowered onto the tubings 47 before the program progresses to the next step. Since initially at step 520 the ARRAY I is packed with the body-up pressure (except for the one reading obtained and stored during steps 490 and 500, respectively), the average pressure calculated from ARRAY I is approximately equal to the body-up pressure. Therefore, if the average pressure is less than the body-up pressure plus a constant in step 520, the sensor processing unit 101 returns to step 490 via step 521 where another pressure reading is made and the resulting pressure is stored into ARRAY I at step 500. With each storage of a new value in ARRAY I, the oldest value is dropped. The average pressure is again calculated at step 510 from the values in ARRAY I and the resulting value is compared to the body-up pressure plus a constant to determine if the truck body has been lowered onto the tubings 47. Steps 490-520 are repeated until the average pressure calculated from ARRAY I reaches a value (because of the lowering of the truck body 13) that is greater than the body-up pressure plus a constant. When this occurs the sensor processing unit 101 will branch from step 520 to step 524 in the flowchart.

Since a negative decision in step 520 indicates the truck body is not fully resting on the on-board weighing device, step 521 checks to determine if the truck is moving before returning the program to step 490. Moving the truck with the body raised may cause serious damage to the hinge assemblies 17 and/or the hydraulic cylinders 19 and 21. If it is determined in step 521 from the distance sensor 138 that the truck is moving, the flowchart branches to steps 522 and 523 wherein the distance traveled is recorded and updated and where a status flag is set for use in connection with step 524.

If the test in step 520 indicates the truck body is completely lowered, the program leaves the loop of steps

490-523 and branches to a test in step 524 in which the status flag of step 523 is investigated. If it has been set, the truck has been moved before the body was fully lowered. Therefore, step 524 branches to step 525 and 526 in response to a set condition of the status flag. In step 525, a running total is kept of the number of dumps for which the truck was moved before the body was fully lowered. Step 526 resets the status flag.

In order to check for a haul-back condition -- i.e., not all of the load was dumped -- step 527 investigates the pressure from the on-board weighing device to determine if the pressure is greater than tare pressure plus a predetermined margin. In the exemplary embodiment, the margin is seven percent of the optimum load. A determination in step 527 that the average pressure is too great and a haul back condition exists will result in the printing of the operator's number by the printer 119 in step 528 and/or a flashing of the operator's number on display 117 (or storing this data in ARRAY VII for downloading). From steps 527 or 528, the program moves to step 530 in FIG. 18e where the CPU 103 reads the current time for use in connection with a later step.

Referring now to FIG. 18e, at step 540, the gear sensor 135 is again checked to see if a gear shift has occurred. If it has, the program branches to step 550 where the following information is printed by the printer 119 (or transferred to ARRAY VII) -- gear shifted from, most recently calculated average net weight, elapsed time in the previous gear and distance traveled in previous gear. As with step 390 in FIG 18c, the gear change in step 540 may be stored as a status flag in order for it to be included with the downloading of data to a central computer as discussed hereinafter. At step 560 the sensor processing unit 101 determines if 25 seconds have elapsed since the time read in step 530. If it has not, the program returns

.o step 540 and the unit 101 again checks to see if there has been a shifting of gears. The delay of 25 seconds implemented at step 560 insures that the truck body 13 has sufficient time to fully settle on the truck frame 15 before the sensor processing unit 101 continues through its calculations.

After 25 seconds have elapsed, the sensor processing unit 101 moves forward to step 570 where a new net pressure reading is calculated and loaded into each of the 16 locations of ARRAY I. From the 16 net pressure readings in ARRAY I, a single average net pressure reading is calculated at step 580. From step 580, the sensor processing unit 101 branches back to the beginning of the main loop of the program at step 269, flagged as "A" in the flowchart.

A periodically generated (for example, two seconds) timer interrupt causes the sensor processing unit 101 to execute the steps of the subroutine in FIG. 18f. This subroutine determines whether an increase in current pressure is attributable to a spike (from rough road conditions) or the addition of a bucket. If it is determined the former is the cause of the pressure increase, the subroutine records the increase as a spike in order to monitor road condition; alternatively, if it is determined a bucket has been added, a series of steps are executed to update the load status of the sensor processing unit 101.

Referring to the particular steps in FIG. 18f, an internal counter of CPU 103 is checked in step 582 to determine if the predetermined maximum count set in step 360 of FIG. 18a has been reached. The predetermined maximum count equals the number of cells in ARRAY I in order that successive average pressure values calculated in the subroutine represent completely different sets of pressure data. If the value of the counter exceeds the number of cells in ARRAY I, the program branches from step 582 to step 584 wherein the current net pressure is examined to

determine if it is greater than the old net pressure reading plus a constant. The constant is a number which is intended to identify pressure increases from the last average which are great enough to be identified if they later prove to be pressure spikes resulting from rough road conditions. If the current net pressure is greater than the old net pressure plus a constant, the program resets the counter at step 586. Otherwise, the program branches to step 616 whose function will be discussed later. By setting the counter to zero, the next interrupt will result in step 582 branching to 588, instead of step 584 as before.

In step 588, the counter is increment and then examined, in step 590, to determine if the counter has reached the maximum count (equal to the number of array cells in ARRAY I). If the count is less than the maximum count, the readings in ARRAY I are not necessarily all new readings with respect to the last average reading. Therefore, the program bypasses the calculation of a new average net pressure and associated program steps by branching to step 616.

If the current count equals the maximum count, then the program moves to step 592 wherein the current average net pressure from ARRAY I is compared to the old average net pressure plus a constant to account for hardware error from devices such as A/D converter 129 (the old average net pressure is the average net pressure which served as the current net average pressure the last time step 592 was answered yes). If the current net average does not exceed the old net average, then the increase in pressure which caused the counter to reset in steps 584 and 586 must have been a spike and not a sustained increase in weight indicative of an added bucket. Therefore, the program branches to step 594 wherein the size of ARRAY I is increased to 24 and the corresponding maximum count is increased to 24. By increasing the size of ARRAY I, more

readings will comprise each average thereby mitigating the effect of pressure spikes. In order to monitor the roughness of the road, the pressure spikes are recorded in step 596. From step 596, the program branches to step 616. In step 616, the weight displayed by the LED display 117 (FIGS. 2b and 16) is refreshed. Alternatively, or in addition to this, new weight data can be transferred to ARRAY VII for downloading to a remote site via a radio link.

If the current average net pressure is greater than the old average net pressure plus an error factor, than a sustained increase in the load is indicated, i.e., a bucket has been added. Therefore, the load is updated in steps 598-608. In step 598, the current average net pressure is converted to weight in preparation for display. Because the truck is being loaded (as indicated by an added bucket), the truck can be assumed not to be moving; therefore, spikes are unlikely to occur. Based on the foregoing assumption the size of ARRAY I is reduced to 16 in step 600 in order to provide more frequent averages (the maximum count is also set at 16). In order to provide an old net average pressure and an old net pressure for the next interrupt in which the count equals the maximum count, the present average net pressure and present instantaneous net pressure are designated old pressures in steps 602 and 604.

Since the truck 11 is in the process of loading, a Load Imbalance Subroutine is called in step 606 and a Load Analysis Subroutine is called in step 608. These subroutines will be discussed in detail in connection with FIG. 18j and FIGS. 18k-m, respectively. From steps 590, 608, 584, 586 or 596, the program updates the average weight shown on the display 117. Of course, if steps 598-608 have been bypassed, the updated average weight is the same as the old average weight. After the routine of FIG. 18f has executed its steps, the sensor processing unit 101 returns to the main program of FIGS. 18a-18e.

Turning to the subroutines illustrated by the flowcharts in FIGS. 18h-r, each subroutine is called from the main program represented by the flowchart in FIGS. 18a-f. For the Read Pressure Subroutine of FIG. 18h, the subroutine is called from step 270 in the main program. In the first step of the subroutine, a single average pressure reading is obtained in step 620 for the on-board weighing device in the manner previously described. From step 620, the subroutine calculates fore and aft pressures in steps 630 and 640, respectively. In order to calculate the aft pressure, the average pressure readings from the rearwardly positioned sensors 51b and 51d are averaged. Correspondingly, in order to provide a forward pressure, the pressure values from the forwardly positioned sensors 51a and 51c are averaged. These fore and aft pressure readings are used in connection with the Imbalance Subroutine called in step 606 and set out in FIG. 18j.

In steps 650 and 660 of the Read Pressure Subroutine, the side-to-side pressure of the truck body on the on-board weighing device is determined. Specifically, in step 650, the averaged pressure readings from sensors 51a and 51b on a first side of the truck 11 are averaged in order to provide a pressure for the first side. Correspondingly, for the opposite side, the averaged pressure readings from sensors 51c and 51d are averaged. As with the fore and aft pressure readings, the side-to-side pressure readings are used in connection with the Imbalance Subroutine of FIG. 18j. After the pressure sensors 51a-d have been read and the appropriate pressure measurements calculated, the subroutine returns to the main program at step 275.

Referring to the Operator Summary Subroutine in FIG. 18i, data indicative of operator performance may be gathered and stored during truck operation under the control of a particular operator number and thereafter summarized and displayed or printed when the operator number is

changed. Although the steps of FIG. 18i are described in connection with organizing data in connection with an operator number, it will be appreciated that the number, input via keypad 122, need not only be indicative of an operator change, but it may also be indicative of changes in truck status occurring while under the control of a single operator, e.g., hauling, break time and other identifiable time segments in a daily routine. For example, summaries in accordance with FIG. 18i may be kept for the duration of the control by an operator, but entry of an additional number via keypad 122 may be recognized by the sensor processing unit 101 as identifying a loader for which summaries are also to be kept. When the truck is directed to a different loader, the operator merely enters the new loader number into the sensor processing unit 101 via the keypad 122 and, in response to the number change, the unit outputs the performance summaries while the truck was loading from the previous loader. From the foregoing, other natural extensions of this concept exemplified in FIG. 18i will be obvious to those familiar with mining management.

The flowchart for the Operator Summary Subroutine sets forth exemplary types of data that can be stored and summarized by the on-board weighing device during its normal operation. For example, since the on-board weighing device calculates the total load for each hauling cycle, the load may be stored and accumulated for all the hauling cycles for a particular truck operator number. By accumulating pressure readings from the on-board weighing device which reflect the total tonnage hauled by the operator, useful information indicative of operator performance can be obtain .

In order to mark the end of the time interval for which the truck was under the control of the previous operator number, the present time is read in step 669. In step 670, the current time or real time read in step 669 is designated

as the "new operator time". To find the elapsed time of control under the previous operator, the old operator time is subtracted from the new operator time in step 671. In order to prepare for the next operator change, step 672 sets the new operator time identified in step 670 equal to the old operator time. In step 673, the total tonnage hauled is divided by the total number of buckets (which is also counted and accummulated) in order to give an indication as to the average weight for each bucket. The weight of the average load is found in step 674 by dividing the total tonnage hauled by the total number of loads. In addition, in step 675, the total number of spikes recorded during the hauling cycles is divided by the total number of loads to provide an average number of spikes for the loads which is indicative of the degree of road roughness. To provide an indication of tire wear, the subroutine calculates a value for tons-miles per hour in step 676 by dividing the total "ton·mile" from step 435 by the total time under operator control. In order to display the average time for a haul cycle, step 677 divides the total time under operator control by the total number of loads by the operator. To find the average distance traveled per load cycle with the body of the truck raised, step 678 divides the total body-up distance (from step 522) by the number of body-up loads (step 525). The foregoing data is stored in ARRAY III of RAM 107.

In step 680, the average number of buckets per load is calculated from information accumulated during the hauling cycle i.e., the total number of buckets from step 790 and the total number of loads hauled by the operator. In step 690, the average time between buckets is calculated. Since the addition of each bucket is sensed by the routine of FIG. 18f, the time between successive buckets is easily determined (in step 850). By summing the times and storing the sum in ARRAY II, the average time between buckets for an

operator can be calculated and printed. This average will give an indication of possible problems during the loading cycle. In step 700, the longest time interval between buckets for each hauling cycle (from step 1020) is summed and divided by the total number of hauling cycles to give a value indicative of the average maximum interval between buckets for the operator. Finally, in step 710 the average values calculated in steps 670-700 are printed by printer 119 in order to give the operator and his employer a hard copy of the foregoing hauling parameters. Of course, as with the previous data outputs, this data may be transferred to ARRAY VII to await downloading to a central computer via a radio link established by the on-board transceiver 150. From step 710, the subroutine returns to the main program at step 280.

Referring now to FIG. 18j, the Imbalance Subroutine called from step 606 in the routine of FIG. 18f tests to determine if the weight distribution of the load carried by the truck body 13 is significantly imbalanced. In step 720, the Imbalance Subroutine checks to determine if the most recent net pressure reading is greater than 65 percent of a predetermined maximum load pressure If the truck body 13 has not yet been loaded to this percentage of its capacity, then the program will exit the subroutine and return to the main program at step 608 in FIG. 18c. When the truck body has been loaded to a weight which is greater than 65 percent of the maximum load the Imbalance Subroutine will test for side-to-side imbalance and fore-and-aft imbalance in steps 730 and 740, respectively.

In step 730, the side-to-side balance is tested by determining if the optimum balance ratio (i.e., 1.0) multiplied by the pressure of the second side and subtracted from the pressure of the first side has an absolute value greater than, for example, ten percent of the truck's load capacity. If the test in step 730 indicates an imbalance of

the load, the subroutine activates the display 117, audio output 196 (FIG. 2b) and/or printer 119 (FIG. 16) at step 750 in order to warn the operator of the truck. This data may also be downloaded via ARRAY VII. From step 750, the program checks for fore-and-aft imbalance at step 740. Alternatively, if a side-to-side imbalance is not indicated by the test in step 730, the subroutine branches directly to step 740 where a algorithm similar to the algorithm in step 730 is utilized to test for a fore-and-aft imbalance. (The optimum ratio for fore-to-aft balance may be, for example,-3 to +3.) If a fore-and-aft imbalance is indicated in step 740 the program moves to step 760 wherein the display 117 inbalance signal 197 (FIG. 2b) and/or printer 119 (or other indication such as truck mounted light 197 to alert loader operator) is activated to alert the truck operator that the truck body is loaded in an imbalanced condition which may cause damage to the truck (this data may also be downloaded via ARRAY VII). From the Imbalance Subroutine, the program moves to the Load Analysis Subroutine.

Referring now to FIG. 18k, the Load Analysis Subroutine provides data related to the loading of the truck body by a loader using a bucket to load the body. By analyzing and summarizing data related to the buckets which incrementally load the truck body, useful information regarding the efficiency of the hauling cycle can be obtained. The Load Analysis Subroutine is called from the routine of FIG. 18f if it is determined at step 592 that the current average of the net pressure readings in ARRAY I is greater than the old average net pressure plus a predetermined constant. As explained in connection with FIG. 18f, when the current average of the net pressure readings in ARRAY I is greater than the old average of the net pressures plus a constant, it can safely be assumed a bucket has been added to the body of the truck; therefore, the Load Analysis Subroutine will be executed starting at step 770 wherein a new bucket

pressure is calculated by subtracting the old average net pressure from the current average net pressure.

In step 780, an average value for the bucket pressure for this load is calculated by multiplying the previous average bucket pressure per load by the number of previous buckets per load and adding the product to the new bucket pressure calculated in step 770. The foregoing sum is then divided by the number of buckets per load which is the number of previous load buckets plus one. In steps 790 and 800, the subroutine updates the number of total buckets and the number of buckets for the current hauling cycle, respectively. In steps 810-815, the time of the bucket is recorded for use in connection with steps in the Load Analysis Subroutine to be discussed hereinafter.

In step 820 of the Load Analysis Subroutine, a test is conducted to determine if the current bucket is the first bucket of a hauling cycle. If the current bucket is the first bucket of a hauling cycle, the program branches to steps 825-829 before returning to the main program loop at step 616 in FIG. 18c. For use in connection with later calculations related to bucket loading time and total buckets, step 825 renames the "new bucket time" as the "old bucket time" and initializes ARRAYS V and VI of RAM 107. For use in connection with communicating with a central computer for controlling the flow of the truck fleet, a load flag is set in step 827. This flag is used in connection with transmitting data from the on-board weighing device to a central computer as will be explained in greater detail in connection with FIGS. 19-20. Finally, in steps 828 and 829, a fresh ton·mile rating is taken which corresponds to the ton·mile rating for the haul segment from the dump site to the load site

If the current bucket is not the first bucket of a hauling cycle, the program branches from step 820 to steps 830-860. In step 830, a calculation is made of the elapsed

time between the addition of the current bucket and the time at which the previous bucket was added at step 830. In step 840, the bucket times are updated in order to prepare the data for the next bucket. In step 850, the elapsed time between the current bucket and the previous bucket is added to a running total of time intervals between buckets to provide a total elapsed loading time. This total elapsed loading time is used in connection with step 690 of the Operator Summary Subroutine in order to provide data indicative of truck and operator performance.

In order to store the net pressure of each bucket, step 852 loads ARRAY V with the pressures for all the buckets of a current load cycle. The last cell, N, in ARRAY V is used as a storage location for the value of the average bucket weight for a load. In connection with the storage of these pressures, step 855 stores the elapsed time between the addition of buckets in a load cycle in ARRAY VI. The data in ARRAYs V and VI may be used in connection with providing a detailed performance report of each load cycle.

In step 860-885, the longest elapsed time between buckets is found. In step 860, the program tests to determine if the current bucket is the second bucket. If the current bucket is the second bucket, then the program automatically designates the current elapsed time between buckets as the maximum elapsed time between the buckets in step 870. Alternatively, if the current bucket is not the first or second bucket as determined in steps 820 and 860, the program will branch to step 880 wherein the current elapsed time between buckets is tested to determine if it is greater than the maximum elapsed time between buckets previously recorded. If the current elapsed time between buckets is not greater than the previously recorded maximum elapsed time between buckets, the program branches to step 890 (FIG. 18m); otherwise, the program designates the elapsed time between buckets as the new maximum elapsed time

between buckets at step 885. The maximum elapsed time is used in connection with step 700 of the Operator Summary Subroutine.

Referring now to FIG. 18m, the current average net pressure is tested to indicate whether the load of the truck body is sufficiently close to the maximum load capacity of the truck such that further addition of material by a full bucket would overload the truck body. In order to prevent the truck from being overloaded, steps 890-920 test to determine if the remaining capacity of the truck body 13 is less than the weight of an average bucket for this load as calculated in step 780 of the subroutine.

Specifically, in step 890 the average net pressure is compared with the predetermined maximum of the truck body minus one-quarter of the average bucket. If the average net pressure is greater than the maximum load minus one-quarter of the average bucket, the truck body will be overloaded by the addition of as little material as fills one-quarter of the bucket. Therefore, the subroutine branches to step 895 wherein the red light 140e of the load indicator panel is activated. The red light 140e serves to warn the loader operator that the truck body 13 is loaded to a capacity which any further loading would overload the truck body.

If the average net pressure is not greater than the maximum load minus one-quarter of the value of an average bucket the subroutine moves to step 900 wherein the current average net pressure is compared with the predetermined maximum load minus one-half the value of an average bucket. If it is determined that the current average net pressure is greater than the maximum load minus one-half the average bucket, the subroutine branches to step 905 wherein the one-quarter yellow light 140d of the load indicator 140 in FIG. 16 is activated. For the loader operator, the one-quarter yellow light 140d indicates that the loader may add further material to the truck body 13 but only an amount

less than one-quarter of the volumetric capacity of the bucket of the loader.

If the test in 900 determines that the average net pressure is not greater than the maximum load minus one-half the average bucket, then the subroutine tests at step 910 to determine whether the current average net pressure is greater than the maximum load minus three-quarters the value of the average bucket. If a positive determination is made in step 910, the subroutine branches to step 915 wherein the one-half yellow light 140c is activated on the load indicator 140. In a similar manner as the one-quarter yellow light 140d, the one-half yellow light 140c indicates to the operator of the loader that the next bucket of material must fill the bucket no greater than one-half the volume of the bucket in order to avoid overloading the truck 13.

If the test in step 910 is negative, the subroutine tests to determine if the current average net pressure is greater than the predetermined maximum load minus a full average bucket. If the test in step 920 is positive, the subroutine activates the three-quarter yellow light 140b of the load indicator 140 in step 925. If the test step 920 is negative, the green light 140a of the load indicator 140 is activated in order to indicate to the operator of the loader that a full bucket load of material may be added to the truck body 13 without overloading the body. From steps 890-926, one of the lights 140a-e on the load indicator 140 will always be activated during the loading of the truck body 13.

Digressing briefly to FIG. 16, the lights 140a-e of the load indicator 140 are positioned in a stacked arrangement such that there relative positions give an indication of the degree of remaining truck capacity. Specifically, the green light 140a occupies the lowermost position in the stack of lights 140a-e, thereby indicating that the truck body has capacity for a full bucket load. The red light 140e at the

top of the stack, indicates the truck body is full and no further bucket loads can safely be added. The three lights 140b-d are positioned intermediate the green and red lights in order to indicate weight capacities intermediate the full bucket capacity symbolized by the green light 140a and no remaining capacity symbolized by the red light 140e.

Referring now to FIG. 18p, the Axle Load Analysis Subroutine is called from the main program at step 305 when a determination is made in step 304 that the operator has called for an analysis of the axle load. As explained in connection with the illustration of FIGS. 13a and 13b, the pressure in the hoist cylinders 19 and 21 is required to calculate the distribution of the load between front and rear axles. Accordingly, in step 928 the pressure from sensor 139 (FIG. 16) is read by the CPU 103 and converted to a weight measurement. In order to get a total body weight, the weight of the load derived from the current average pressure is added to the tare weight of the truck body in step 929. In step 930 the center of gravity for the load is calculated from the total weight and the weight measurement from the sensor 139 in the hoist cylinder system. The particular algorithm used in step 930 in order to calculate the location of the center of gravity for the load is set forth as equation 2 in connection with FIGS. 13a and 13b. With the center of gravity for the load known, the distribution of the load over the front and rear axles is determined in steps 940 and 950, respectively, using equations 4 and 6.

In step 960 the tare weights for the front and rear axle are added to the axle loads for the front and rear axles calculated in steps 940 and 950. Therefore, the adjusted pressure readings for the front and rear axles obtained from step 960 reflect a total weight over the front and rear axles. Finally, in step 980, the subroutine commands the printer 119 to print the weights bearing on the front and rear axles (or store in ARRAY VII).

Turning now to FIG. 18r, the Dump Subroutine is called by step 406 of the main program after the dump sensor has been activated as detected in step 400. The Dump Subroutine summarizes selected parameters at the end of a hauling cycle which is indicated by the activation of the dump sensor 137. In step 1000, the current average net weight is added to the total of previous weights hauled in order to provide the total tonnage hauled by the truck while under control of the operator. The total tonnage hauled is used in connection with the Operator Summary Subroutine. Because the activation of the dump sensor 137 indicates an end to a hauling cycle, the number of buckets per load and the average bucket pressure per load are set equal to zero in step 1010 in order to initialize these values for the next hauling cycle. In step 1020, a total maximum elapsed time between buckets is updated by adding the maximum elapsed time between buckets for the last load cycle.

In order to record the number of hauling cycles, step 1030 increments a stored number identified as "total number of loads" which is used in connection with the Operator Summary Subroutine to provide averaged data indicative of operator performance. In order to keep track of road roughness, the total number of spikes recorded during a hauling cycle is accumulated in step 1040 with the number of spikes during previous hauling cycles. The total number of spikes is used in connection with the Operator Summary Subroutine in order to provide an indication of road quality. Following step 1040, spikes are set equal to zero in order to provide a frsh basis for accumulating spikes in the next load cycle.

In step 1050, a test is conducted to determined whether the current average net pressure is greater than a predetermined maximum pressure which corresponds to the maximum weight capacity of the truck. If the test in 1050 is positive, the overloading of the truck is recorded in

steps 1060-1080. In step 1060, an overload counter is incremented to indicate that the present hauling cycle was an overload cycle. In step 1070, the amount of overloading or "overage pressure" is calculated by subtracting the average net pressure from the maximum allowable pressure. The overage pressure for the present hauling cycle is added to a total overage pressure for all hauling cycles in order to provide a pressure value indicative of the total weight by which the truck has been overloaded. From either step 1080 or from a negative indication in step 1050 the Dump Subroutine moves to step 1090 wherein the printer 119 (FIG. 16) is activated to print the weight of each bucket for the just completed haul cycle (stored in ARRAY V) and the elapsed time between each bucket (stored in ARRAY VI). This data may also be transferred to ARRAY VII for downloading.

As is apparent from the foregoing description, large amounts of data are gathered from the on-board weighing device and related on-board sensors. When a plurality of trucks in a fleet are equipped to collect such data, in order for this data to be of the most benefit to fleet operators, this data needs to be downloaded for long term storage and analyzation in order to create and maintain a historical file of truck fleet activity and performance. Obviously, the printer 119 provides a permanent record. However, for large fleets it is cumbersome, at best, to store this data in this form with an intent of later analyzation and reference. Therefore, to allow the data generated to be more easily manipulated and analyzed, the sensor processing unit 101 may be coupled to a storage memory such as a cassette tape or non-volatile memory pack in order to download the ARRAYS when they reach their capacity. However, downloading in this manner is not on a real time basis and it requires operator or management intervention in order to assure the downloaded data is collected in a timely manner i.e., collection of paper tape.

For the data generated by the sensor processing unit 101 to be of the greatest benefit and value it needs to be gathered and analyzed on a real time basis (as opposed to gathering paper tapes at the end of a work cycle) so that as data is generated by a fleet of trucks it can be immediately gathered to provide a real time analysis of fleet operations. Therefore, preferably, and in accordance with the invention, the accumulating real-time data can be of the most value if it is downloaded by a radio link from the on-board device to a remote fixed location where a historical real-time file can be created and analyzed in order to give management personnel at a remote site a current indication of truck fleet performance. By analyzing the downloaded real-time data on a historical real-time basis, the loaders of the trucks may also be evaluated. As a feature of the real-time data gathering by radio link data downloading, each truck in a fleet is able to communicate with a central computer via radio links with one or more repeater points. As this occurs, these repeater points can in turn communicate back data from the central computer to the individual trucks; Therefore, instructions/directions can be sent selectively to trucks.

Referring to FIG. 19a, in mining operations or similar type hauling, it is not unusual for there to be simultaneously hauling of overburden, coal or the like. Also, in large operations, more than one loader 160 services the truck fleet and there may be more than one dump site. Gathering data generated by the sensor processing unit 101 and controlling traffic flow from the dump sites to the loaders 160 or vis-versa becomes unwielding, and therefore inefficient, when the mining operation is large and many trucks and loaders are involved. As a function of its data gathering capabilities, the on-board weighing system described herein allows the electronic system of FIG. 16 to accurately record the elapsed time of a hauling cycle or

segments thereof and, since the on-board weighing system provides an indication to the electronic system when a load cycle begins and ends, as a transceiver 150 is mounted to each truck 11 (illustrated in FIG. 19a) for data downloading with a central computer 155. This data when gathered by the central computer 155 and analyzed can be utilized by the central computer to provide instructions and directions for efficient traffic control and remote monitoring of truck performance. Other data, in addition to the above, as outlined in the flowcharts of FIGS. 18a-r is also downloaded to the central computer 155 for storage and analysis from the on-board weighing device. As will be explained in greater detail hereinafter, data downloading communication between the trucks 11 and the central computer 155 is handled by strategically located repeaters 160a and 161 in FIG. 19a.

The central computer 155 receives data from the electronic circuitry on the truck 11 by way of the radio (or hard wire) link 157 (or hard wire links from stationary pick up points such as dump sites). In order to provide a two-way link, the central computer 155 includes a transceiver 155a. Data received from the trucks 11 is processed by the CPU 155b with the aid of PROM 155c and RAM 155d. The CPU 155b communicates to the PROM 155c and RAM 155d along a bus 155e in conventional fashion.

Because the on-board weighing device and its associated circuitry determines when a load cycle starts (the first bucket is sensed) and ends (first gear shift after first bucket) and when a dump begins (as well as other operating data), the central computer 155 is able to use this data to provide efficient instructions and directions for controlling movement of the trucks without depending on any human cooperation, e.g., no one need remember to manually hit a load or dump switch to signal the central computer. Because the system is fully automated, it is highly

reliable. In addition, the data gathered by real-time radio data downloading from the on-board weighing device, when stored and analyzed by the central computer, allows precise control of the routing of the trucks for top efficiency.

Referring to FIG. 19b, by way of transceiver 150 the trucks 11 download a data frame comprising a synchronization word followed by the truck number and data representative of a truck condition, e.g., a load or dump condition. In response to this received data from the trucks 11, the central computer stores and analyzes this data. After the central computer properly analyzes this data it may, depending on truck status, send a data frame comprising a synchronization word followed by the particular truck and loader numbers. In order to prevent simultaneous or overlapping transmissions from the trucks 11, the trucks 11 transmit in response to an inquiry signal from the central computer 155. The central computer 155 polls the trucks 11 to determine if any truck is ready to send data. In response to a polling, the trucks 11 respond by transmitting the required data (dump, load or other data) in the format shown in FIG. 19b.

Keying the transceiver 150 for transmission of the data frame occurs in response to the sensing of data generation such as a dump condition (activation of the dump switch 137) a load condition (sensing of a first bucket) and the like. Obviously, whether the data frame includes load or dump data indications depends on whether the dump switch 137 has been activated or whether a first bucket has been added. As will be explained in greater detail in connection with FIGS. 20a-b, the central computer 155 receives the data in the data frame from the trucks 11 and concludes from the data which loader 160 can provide the quickest load cycle time for a truck now dumping and therefore ending its previous load cycle or which dump site is the proper one for a truck now loading and therefore ready for instructions and/or

directions to a dump site. Once the central computer 155 has determined which loader will minimize the time of a load cycle or which dump site is the proper one, the computer transmits by way of transceiver 155a the data frame containing a particular truck number the computer wishes to address and a particular loader or dump site number which the computer wishes to direct the truck. Each truck receives the data frame from the central computer 155, but only the truck having the same number as the number transmitted will respond to the data containing the loader number. When the truck number and the truck number data correspond, the loader dump site or other site designation number transmitted with the truck number is either displayed on the LED display 117 of the designated truck or printed as hard copy on the truck's printer 119. From the loader number, the truck operator knows which loader to go to for his next load. By analogy, the central computer 155 may also deliver destination data when multiple dump sites are used or a rest stop designation if the operator is scheduled for a break. Many other useful destinations will be appreciated by those familiar with mining operations.

Referring briefly to FIG. 19c, an opening 1300 may be provided in the floor of the body 13 for allowing a switch assembly to sense the presence of a load and thereby indicate to the sensor processing unit 101 when loading begins. Such a device could combine with the sensor processing unit 101 to give a simplified truck dispatch system according to FIG. 19a. With the addition of the switch assembly in FIG. 19c, the on-board weighing device and its complementary load sensors (except the dump sensor) are not required for simply dispatching trucks in response to load and dump signals only.

The opening 1300 in the floor of the truck body 13 is covered by a flexible, but rugged material 1301 such as a thick rubber mat which is secured to the bed of the truck

body along its perimeter. A hinged flap 1302 is biased upwardly by a spring and shaft assembly 1303. In response to the introduction of material into the truck body 13, the flap 1302 closes over the opening 1300 and pushes down the plunger of a switch 1304. Of course, the switch closure generates a signal indicative to the sensor processing unit 101 of the starting of loading.

In the flowchart of FIG. 20a, the data received from the trucks 11, is manipulated and stored in order to accurately determine the correct loader to route a truck when it completes a haul cycle. A periodic interrupt causes the central computer to execute the steps of FIG. 20a. At each interrupt, the central computer 155 polls all the trucks 11 for data. In step 1097, the present time is read and temporarily stored. In step 1098, the truck number is initialized to a starting value. The transceiver 155a is keyed in step 1099 and a formated inquiry signal is sent to the designated truck. If data is detected in step 1100, the computer reads the data and manipulates it in accordance with steps 1110-1190; otherwise, the truck number is incremented in step 1102, and a new truck is polled for data in step 1099. If all the trucks have been polled for this interrupt, step 1104 returns the central computer 155 to the main program. When a valid transmission is detected, the flowchart moves to step 1110 where the truck number is decoded. If the received data frame includes a dump indication, the most recent load time for this particular truck is subtracted from the current time to provide a loaded haul time in step 1140. If a dump indication is not present, the program branches to step 1132 where the data frame is checked for a load indication. If the data frame includes a load indication, the program branches from step 1132 to step 1135 wherein the real time is stored as the "load time". If a load indication is not present, step 1132 returns the central computer 155 to the main program. By

analogy, other downloaded data (gearshift, operator number change, etc.), may be identified by the central computer 155 and routed to appropriate storage locations at the central computer. Of course, data of different types (e.g., elapsed times, weights of buckets, etc.) must be encoded in a conventional manner by the sensor processing unit 101 in order that the central computer 155 can identify the data for categorization.

At the central computer 155, a data base (not shown) is maintained for each truck as well as for each model of truck. For example, in a fleet of 20 trucks, trucks one through 10 may be a first type of truck with a particular capacity, while trucks 11-20 may be a second type of truck with a different capacity. From the makeup of the truck fleet, a data base is organized to best provide useful information. For the above-mentioned fleet of 20, the data base is divided into two main sections, one for each type of truck, and each section has ten cells, one for each truck. By organizing the data base in the foregoing manner, data for each truck can be collected and manipulated and, also, data for each type of truck can be obtained. In addition, since each haul cycle for a truck is identifiable with a particular loader, a data base is also set up for each truck/dump site/loader combination.

In the data base at the central computer 155, the cell for each truck includes data identifying the last loader to which the truck was directed and the time it was directed. Therefore, an average loaded haul time for a particular truck hauling from a particular loader to a particular dump site can be determined. In step 1150, an average haul time for each of the trucks from each of the loaders to each dump site, stored in an array in RAM 155d, is accessed. The most recent haul time for a particular loaded truck, a particular loader and a particular dump site is added to the average in order to update it in step 1160. The updated average loaded haul time is returned to the storage array in step 1170.

Because the central computer 155 is in communication with each of the trucks 11, it knows the number of trucks 11 that have been sent to a particular loader; it also knows how many of those trucks sent to a particular loader 160 have indicated loading has begun. From the foregoing information, as the trucks 11 become available from a dump site or other areas, the central computer 155 executes an algorithm in step 1180 to determine which loader can most quickly load the current truck and return it to the dump site. The central computer 155 calculates a "delay" time for each loader and identifies the loader with the minimum delay as the truck's destination. For each loader 160 the delay may be determined as follows:

$$\text{DELAY}(n) = \text{NO. OF TRUCKS IN TRANSFER OR AT LOADER}(n) \times \text{AVE. LOAD TIME FOR LOADER}(n) \ominus \text{DIFFERENCE BETWEEN ELAPSED TIME SINCE LAST LOAD TRANSMIT AND AVE. LOAD TIME}$$

From the foregoing algorithm, the central computer 155 calculates in a conventional manner from available data the number of trucks in transit to or at the loader(n). A calculation of the number of trucks at the loader site or in transit thereto is easily derived from available data since the central computer 155 identifies which trucks have been directed to a given loader 160 and have not yet transmitted a load start signal. The load time of each loader is calculated from data made available by the truck's sensor processing unit 101. The beginning of the load is marked by the central computer 155 when it receives a load signal from the sensor processing unit 101. The end of the loading is marked by the central computer 155 when it receives the first gear shift signal sensed by the sensor processing unit

101 from the gear sensor 135 after transmission of the load start signal to the central computer 155. Obviously, for the central computer 155 to calculate a load time and an average load time for each loader, the on-board weighing device must transmit both the load start signal and a signal indicative of the first gear change. The latter signal is not set forth in the flowchart diagrams, but it will be appreciated by a programmer that the data may be transmitted in response to a polling request from the central computer 155.

Because the loading is sequential (i.e., each truck is fully loaded in its turn), only the latest load transmission signal can be from a truck still being loaded. Therefore, more than one load transmission signal indicates some trucks are in transit back to the dump site. Obviously, these trucks need not be considered in calculating a time delay for loading. In order to accurately account for the time delay caused by the truck currently being loaded, the time difference between the last load signal and the average load time should be subtracted from the product of the number of trucks at or in transit to the loader and the average load time. To this difference is added the travel time for the truck being directed from that truck's present location (normally a dump area) to the particular loader 160. For example, two loaders may have load delays of five minutes and ten minutes, respectively, before considering truck travel time. However, if the travel time to the first

loader 160 is 12 minutes while the second loader has a five minute travel time, this travel time is subtracted from the time delay to arrive at a total delay time which is -7 minutes for the first loader and +5 minutes for the second loader; thus, the central computer 155 designates the first loader as the truck's destination since the minus delay time indicates the time the loader will be waiting for a truck. After the delay of each loader 160 is

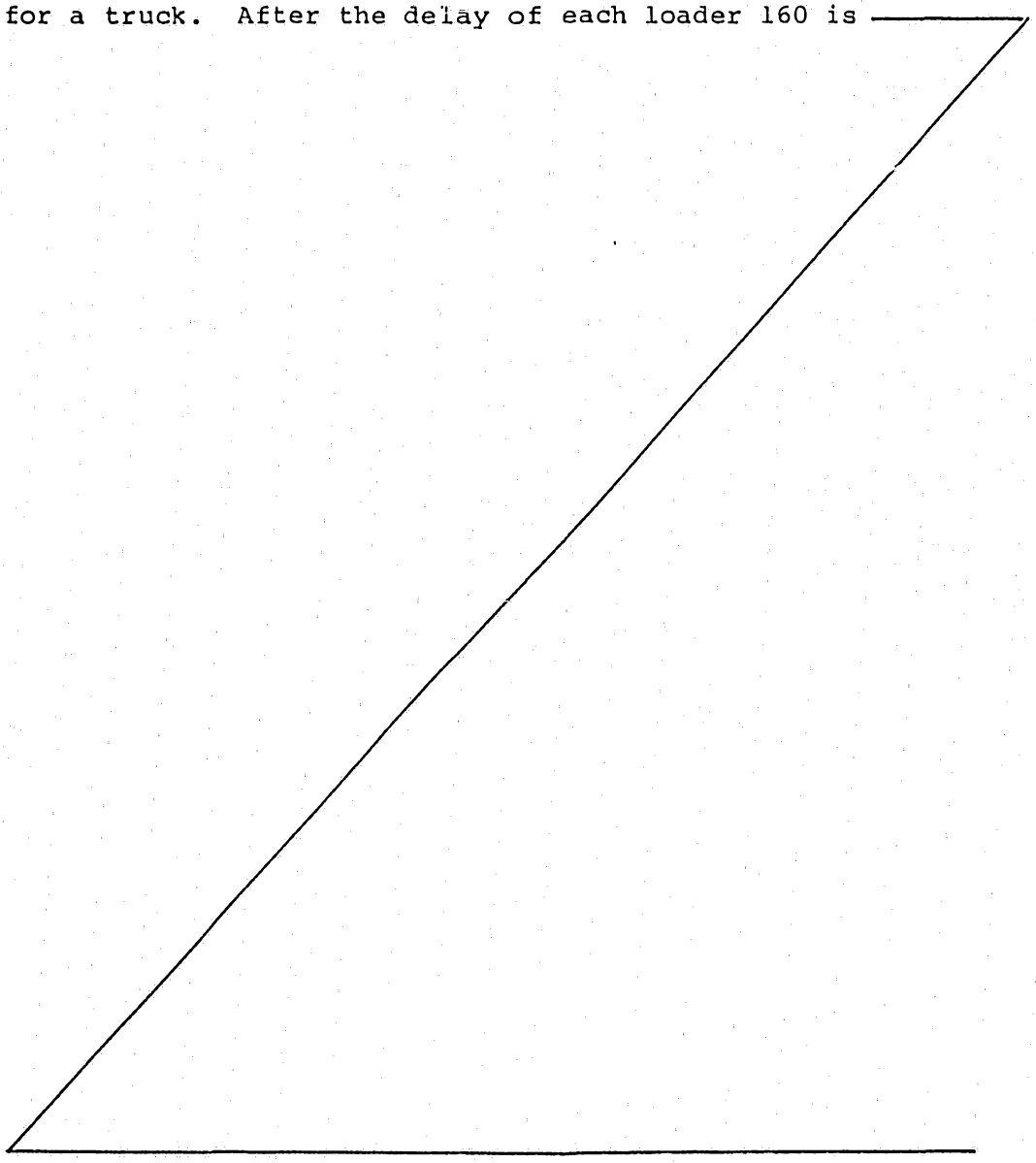

calculated, the central computer 155 transmits a signal at step 1190 having data identifying the particular truck for which the transmission is intended and also having data indicating the particular loader number with the current minimum delay time.

In response to the transmission from the central computer 155, the transceivers 150 of all the trucks 11 lock onto the signal during the sync portion of the transmission and compare the transmitted truck number to their own numbers. FIG. 20b illustrates the flowchart to execute the comparison of a transmitted truck number and the stored truck number. In a simple scheme, the steps of FIG. 20b are executed periodically by a timer interrupt. At each interrupt, the CPU 103 of FIG. 16 checks to see if the transceiver 150 is receiving a transmission. If no signal is present in step 1210, the program returns the CPU 103 to the main program. If a signal is present, the transmitted truck number is captured and compared to the truck's own number at step 1220. If they are not identical, the data identifying a particular loader number, dump site or designated site, which follows the transmitted truck number, is ignored. When a match occurs between truck numbers, the central computer 155 is contacting a particular truck 11 either to poll it or to instruct it which loader 160, dump site 161 or designated site to go to. In order for the sensor processing unit 101 to know which instruction is currently being received, step 1225 determines if the data following the truck number is a polling request. If it is a polling request, the program determines at step 1240 if ARRAY VII contains data for downloading; if it does, the transceiver 150 is keyed and the appropriate data (e.g., dump, load gearshift, operator number change, etc.) is transmitted to the central computer 155 in step 1250. Alternatively, if the received data is not a polling inquiry, it must be instructions for a loader, dump site or

other destination. Therefore, the loader number, dump site or other designation is stored and displayed to the truck operator at step 1260.

In a haul cycle there are two important travel segments - the loader to dump site segment and the dump site to loader segment. These two segments are the main components of a full cycle. Because the on-board weighing device detects when loading begins and when dumping occurs, important data can be transferred at those times from the truck 11 to the central computer 155 for processing when the truck is polled. For example, the ton·mile calculation by the sensor processing unit 101 is important for each haul segment since it indicates a degree of tire use for the haul segment. This data may be transmitted to the central processor 155 for processing in response to polling of the trucks. Management personnel can monitor (the central computer 155 may, alternatively, include a software routine to monitor this or other data) the updated or averaged ton·mile data from each haul segment at the site of the central computer 155 in order to dispatch trucks in a manner to ensure even fleet accumulation of ton·mile and/or ensure tires are not being used above their rated ton·mile per hour rating. Of course, other data available from the on-board weighing device can be downloaded to the central computer 155 in the same manner as the foregoing data. Finally, a portion of the data downloaded to the central computer 155 may, in addition, be downloaded to a processor (not shown) on-board the loader 160 loading the truck in order to give the operator of the loader an indication of the truck's load condition. Such a communication link would be similar to the link set forth above in connection with the central computer 155. The specific type of radio link could be any type of commercially available data link suitable for transfer of the type of data here involved such as REPCO, Inc., RF modem, RDS-1200, 944-960 MH_z, full duplex. It will

be appreciated from the foregoing that data such as the operator summaries of ARRAY II will be downloaded from the memory of the sensor processing unit 101 to the central computer 155 for storage and analysis.

In order to reduce the expense of providing high-power transceivers on each truck 11, for data downloading stationary repeaters 160a and 161 (in FIG. 19a) are provided at scattered locations in the working site. By providing these repeaters 160a and 161, each transceiver 150 need be only a low power device. In addition, by methods well known in the field of communications, the central computer 155 may identify which repeater 160a and 161 is retransmitting the downloading of truck data. By knowing the particular repeater 160a and 161 in which a truck 11 is in range, the central computer 155 may track movement of the trucks. Moreover, during data download polling of the trucks 11 by the central computer 155, data may be transmitted indicating an "out-of-service" condition or an "in-transit" condition for the truck. By providing data such as the foregoing, the central computer 155 may keep track of which trucks are currently loading, dumping, in transit or out of service. As trucks 11 are directed to various loaders 160, dump sites, etc., the central computer 155 notes a projected time of arrival for the truck based on its historical data base. If a truck 11 fails to arrive at its designated location within this time period plus a predetermined percentage of the period, then the central computer 155 will provide a sensory alert to management personnel so that the status of the truck can be checked. For those trucks 11 which go out of service, the central computer 155 can update the load delay for the particular loader 160 for which the out-of-service truck was destined.

As an extension of the foregoing data downloading and controlling of truck movement, the interaction of the sensor processing units 101 of the trucks 11 and the central

computer 155 also provides the ability for data file management at a remote location. Specifically, information from each of the sensor units 101 is downloaded to a master data file associated with the central computer 155 where the data may be manipulated in order to provide useful real time information to management personnel. For example, from real time data the central computer 155 may analyze the average number of loads or tons loaded per hour by a particular loader 160 and/or average number of loads or tons hauled by a particular truck. From the foregoing analysis, accurate projections for the best utilization of the trucks and loaders can be developed.

In addition to receiving the downloaded data and dispatching trucks 11 to proper loaders 160, dump sites or designated sites, the central computer 155 maintains data on tonnage loaded by particular loaders, tonnage hauled by particular trucks and total tonnage hauled to each dumping area. The central computer 155 records the out-of-service times for all trucks 11 and loaders 160 and identifies the trucks and loaders which are out of service for the longest times in a predetermined time period.

Mine management with this system can see what has been done in terms of mine production and can make extremely accurate projections, 1 month, 6 months, possibly even 12 months down the road. With these projections as to what total mine production can be, e.g., anticipated tons of various material to be moved, the mine operating personnel can make equipment assignments and changes to those equipment assignments so that mine production does, in fact, meet mine production projections.

For example, the central computer 155 cumulatively records ton-mile per hour data over a given time frame so that as a truck accumulates ton-mile per hour figures the cumulative figures for all trucks are compared and the trucks with excessive ton-mile per hour numbers can be

dispatched to locations from which less ton-mile per hour figures occur.

Additionally, the central computer 155 as well as the sensor processing units 101 may analyze vehicle component strain, such as engine operating temperature, hydraulic oil temperature, heat buildup in the tires, etc. As a particular component on a vehicle approaches a preset limit, the vehicle may on future haul dispatches be dispatched to a haul that might be less trying on the vehicle, i.e., for a mine with a multi-bench operation vehicles may be rotated so that no one vehicle is continually hauling off of the lowest bench. This analyzation of vehicle component strain obviously turns on the need to add additional vehicle monitors to the vehicle and provide radio downloading transmission capabilities from these monitors to the central computer 155.

Conceptually, the master data file (not shown) of the central computer 155 contains four primary files from downloading data:

1) Loading time for each truck with each piece of loading equipment;

2) Loaded haul time from each loader to each dump area for each truck;

3) Empty return time from each dump area to each loader for each truck; and

4) Total haul cycle time for each truck from each loader to each dump area.

This master data file may be either separate from or incorporated with the data base for each type of truck (having subfiles for each truck) and for each loader/dump site combination.

Each of the four primary files of the master data file is separated by loading equipment type, truck type and dump site, e.g., make, model, size, type of body or type of material to be hauled, whether it is ore, overburden, dual

purpose, etc. For example, data for 170 ton trucks are filed separate from data for 120 ton trucks. Each class of truck, loader and dump site combination has a separate historical subfile to be used to determine how long it should take a truck of that class to get from a dump to loading site or vis versa. With respect to the loaders 160, a similar subfile system exists for each class. In addition, loader 160 has a subfile for each type of truck it loads. These subfiles store historical data on how long it takes the loaders 160 to load any particular type of truck 11.

As a particular example of the data base and master data file, if a mine had 10-170 ton Wabco trucks and 10-120 ton Euclid trucks, then the central computer 155 would have a data base comprising a historical subfile for each truck, loader/dump site combination, i.e. 20 truck subfiles. Data from the 10 Wabco subfiles is averaged together to comprise a master Wabco data file; likewise, a master Euclid data file is created for the Euclid trucks. Then, as each respective truck generates data, its corresponding historical subfile is updated and averaged according to that data. In response to downloading data for updating of these historical subfiles for each truck, the four primary files of the master data file for the truck class (e.g., Euclid or Wabco) are also updated.

As evidenced by the degree and variety of data available from the on-board weighing devices, the downloading communications link between trucks 11 and the central computer 155 is potentially much more than a RF data downloading link, it is also the means for a traffic controller. Downloading of all or selected portions of data generated by the sensor processing unit 101, allows the central computer 155 to function as a mine management system. The following description of the functioning of such a system is intended as an outline of the programming

steps made possible by the organization of memory in the central computer 155 into a data base with subfiles for each truck/loader combination and primary files for each class of truck as described herein and the downloading of data in addition to load and dump data as previously discussed in connection with FIGS. 19a-b and 20a-b.

In order for polling by the central computer to occur sufficiently often so that the downloading of data may approach a real time data read out, repeaters 161 should be of sufficient number in strategic positions. In addition, by identifying their location in the repeated signal, the repeaters 160a and 161, identify truck locations, i.e. the data signal from the trucks 11 when received by the repeater is supplemented with data identifying the repeater. As data accumulates in each of the sensor processing units 101 of the trucks 11, it is stored in memory until the truck is within range of a repeater 160a or 161, whereupon the data is downloaded to that repeater and sent on to the central computer 155. With strategically placed repeaters 161, not only is the data downloaded at close to a real time basis, but the repeaters keep an accurate track of truck location.

For example, as a truck 11 leaves the dump area 1, it is notified by the central computer 155 via the repeater 161 at dump area 1 which loader 160 has the minimum delay. The truck 11 is then on its way to that particular loader location. The truck 11 possibly accumulates some data in route to that particular loader 160a. As it comes within range of the particular loader 160a, data accumulated enroute from dump area 1, if not previously transmitted, is transmitted to the repeater 160a on the loader and resent to the central computer 155, thus identifying the truck's current vicinity.

As soon as the central computer 155 detects data downloading from the truck through the repeater 160a at the loader location to which the truck was dispatched, it knows

that the truck has arrived in the vicinity of the particular loader. If in route to the designated loader, the truck 11 passes another loader 160 or comes within the range of another strategically placed repeater 161 (possibly dump area 2 in FIG. 19a), any data accumulated is downloaded via that repeater 161 to the central computer 155, thereby again identifying truck location.

Once the truck 11 gets to its designated loader 160 or loading area, the gearshift is placed in neutral or reverse by the driver. This change in gear is detected by the gear sensor 135 of the on-board weighing device and the data is downloaded via the repeater 160a to the central computer 155, and the central computer thereby h s further confirmation that the truck 11 has arrived at the designated loader. It should be noted, however, that if there are two or more loaders in the same immediate vicinity or within the transmit range of the radio signal of the truck, these loaders should be classed as one loading area or one piece of loading equipment for purposes of data handling by the central computer 155.

With the truck 11 in the general area of the designated loader 160, as the truck positions itself for loading (i.e., shifts forward, reverse, etc.), data is generated that is downloaded via the repeater 160a to the central computer 155 and, with the first bucket pass into the truck, additional data is generated that is downloaded to the central computer 155. With the first bucket pass, the central computer 155 looks at one of the primary files in the master data file for the average loading time of this particular loader 160 for loading this particular type of truck 11. Based on this primary file, the central computer 155 determines when this truck 11 will be fully loaded and when the next truck is needed at this particular loader 160 for continuous truck loading to occur.

With the last bucket pass into the truck 11, (sensed by

a gear shift forward leaving the loading area) this data is downloaded to the central computer 155 which accesses another primary data file from the master data file; this file contains the average travel or haul time of this particular type of truck from this loading location to various dump areas that this truck can be directed to. The central computer 155 then analyzes the projected truck arrival time at each of these areas based on its record of trucks already enroute to the dump areas and determines which dump area will have the least congestion. The central computer 155 then analyzes trucks enroute and their projected arrival times to direct the truck just loaded to a particular dump area as designated by the central computer as well as determining what the elapsed time should approximate from this final bucket pass (i.e., gear shift forward) until the truck arrives at the designated dumping area. As the truck 11 leaves the area of the loader 160 for the dump area, data (such as gear shifting, distance traveled, etc.) accumulates and is transmitted from the truck via the repeater 160a on the loader to the central computer 155, and the central computer 155 estimates when this truck will arrive at its designated dump area.

Upon coming within range of the designated dump area, the repeater 161 receives any data accumulated by the truck 11 and downloads it to the central computer 155. With the travel time of the truck 11 from the loading area to the dump area noted by the central computer 155, the appropriate primary file of the master data file is updated. (Loaded travel time is the time from the first forward gear shift after loading commences until the dump switch is activated.) As the truck dumps, the dump switch is activated and data indicative of this is generated by the sensor processing unit 101. This data is downloaded to the central computer 155 and, at this point, the truck 11 is then available for another load. Therefore, the central

computer 155 searches to determine with what loaders 160 this particular type of truck is being used. (The central computer 155 differentiates between trucks of different load types - different body styles; for example, trucks hauling coal or overburden in a mining operating.) The central computer 155 reviews the loading/haulage status of each loader 160 and, it analyzes when each loader will need another truck to load based on 1) the historical loading data files, 2) what trucks 11 have already been dispatched to each of the loaders 160 and 3) the historical empty travel time from the particular location of the truck 11. The central computer 155 then reviews the primary travel time file from the dump area (the truck's particular location) to each particular loading area. From the travel time data, the central computer 155 looks at the historical empty return truck time and determines which loader will need a truck the soonest and, in response to this determination, transmits directions and instructions to the truck dispatching it to the particular loader.

At the same time that loader destination information is transmitted to a truck 11, the central computer 155 reviews a historical data file of total haul cycle time for that truck from the loader to which the truck has been dispatched and identifies a median haul cycle time to all possible truck dump locations. A percentage of the median time is added to the median in order to provide a time period within which the truck should be expected to complete a haul cycle i.e., dumping another load. For example, if the median haul cycle were 12 minutes and the central computer 155 is programmed to add 20% to this time, if dump data were not registered as being downloaded from this truck within this 12 minutes + 20%, the central computer then would flash to its operator that the truck in question is late in completing its haul cycle to a dump area; whereupon, the operator of the central computer 155 may via conventional

two-way radio the truck's driver to see if there is a problem with the truck.

If a truck driver parks the truck for a break or a rest stop, the driver alerts the operator of the central computer 155 to that fact via conventional two-way radio. In response to this received data, the operator of the central computer 155 punches up that truck number and indicates that truck's location and that no loads will be hauled for a predetermined time period and that possibly no data transmissions will be occuring over this same time period. (Trucks should only be parked within range of repeater 160a or 161.) In some cases it is possible to communicate the same information via data downloaded through an interrupt instituted by the operator's selection of an appropriate key of the keyboard 122.

When a truck goes out of service because of a breakdown, operator rest or the like, the central computer 155 dispatches new available trucks to the loading area previously transmitted to the parked (on break) truck and then transmits to the parked truck a new updated loading location. This procedure is repeated until the parked (on break) truck is indicated as being back in service by data indicating such things as the shifting of gears. If the truck was loaded when parked, no dispatching may occur since the central computer 155 recognizes the truck is loaded and must be first dumped before it can be dispatched.

If no data has been received, at the end of the time period selected by the truck operator as his break time or down time, the central computer 155 will flash the truck number to the operator of the central computer. The central computer operator may radio, via conventional two-way radio, the truck to check on the truck's status. If the central operator finds the truck is still down for whatever reason, he may punch up the truck number and indicate how many more minutes the truck will be down. This process continues to

be repeated by the central computer 155 until the truck is back in service or temporarily taken out of service.

With respect to truck travel from the dump area to a loader, the central computer 155 records the time of truck dispatch and looks for that truck to arrive at the designated loading area within a predetermined time based on historical truck return time in a primary data file. If the truck is late in arriving at its designated loading area, i.e., no data downloading to indicate arrival, the truck number is flashed to the operator of the central computer whereupon he may radio, via conventional two-way radio, the truck driver to check on that truck's status.

The central computer 155 also follows the foregoing steps when it detects a truck leaving a loading area headed for a designated dump area. The central computer 155 identifies in its data file the average haul travel time it takes a like truck to get to the designated dumping area. If further data is not detected by the central computer 155 within this average time, then that truck number is flashed to the operator of the central computer whereupon he may check on that truck's status.

In addition to receiving downloaded data, monitoring and dispatching trucks 11 in the foregoing manner, the central computer 155 also identifies and monitors the various loaders 160 by identifying the repeater 160a through which truck data is coming to the central computer. Accordingly, the central computer 155, as data is downloaded to it, analyzes the average number of loads and/or tons loaded per hour by a particular loader 160 and how many minutes occur between each load. As the central computer 155 monitors each loader 160 through data downloading, if it detects a lack of load information coming from a particular repeater source, it flashes to the operator of the central computer the number of that repeater source (or loader). The operator of the central computer 155 may radio, via

conventional two-way radio the loader operator and identify whether there is a problem with that loader. If that particular loader 160 is down, the loader operator may respond to the operator of the central computer 155 with an estimate of how long he will be down. The operator of the central control computer 155 then enters into the central computer that this loader will be down for a particular time period.

The central computer 155 adds a percentage of this particular time period to the estimated time period in order to provide a buffer range. At the end of this increased time period, the central computer 155 checks the downloaded status of loader 160 and determines whether loading data is present. If no loading data is present from this loader, the loader number is again flashed to the operator of the central control computer 155 whereupon he may again check with the operator of that loader to see how much longer it will be down. This additional time is entered into the central computer 155 and the steps are repeated.

As soon as data is entered by the operator of the central computer 155 indicating that a particular loader 160 is down, the central computer redispatches trucks 11 away from this loader with any trucks in the immediate vicinity of that loader getting their signal through the repeater 160a on this loader while trucks in route may possibly have to arrive in the vicinity of the loader before picking up a redispatch number. For redispatching, the central computer 155 does not consider specific travel times; rather, by way of simplification, it sets all travel times equal for the loading locations to which the trucks are redispatched. This eliminates any data errors redispatching might otherwise cause.

As a piece of loading equipment is down the time when that piece of loading equipment is supposed to be back up is automatically registered in the central computer 155 and the

central computer, depending on programming, can automatically dispatch one and only one vehicle, or if so programmed 2 or more trucks, to that piece of loading equipment. Or, if so programmed, the central computer 155 can flash the respective number of the piece of loading equipment to the central computer operator, whereupon he asks, via conventional two-way radio, the loading equipment operator whether that piece of loading equipment is again up and ready to run so that trucks can be dispatched to it. If the answer is yes, trucks can be dispatched to that piece of loading equipment, the operator of the central computer 155 enters in on his keyboard that, that particular piece of loading equipment is again up and running. The central computer 155 then immediately takes over automatic dispatching and dispatches the first available truck to that piece of loading equipment.

If the central computer 155, through data being downloaded to it, determines there is either excess haulage capacity or loading capacity, it signals the computer operator. If excess haulage capacity is indicated, the computer 155 indicates which truck 11 is closest to a required preventive maintenance period. A similar determination is made for the loaders 160 when excess loading capacity is indicated. As soon as the excess truck 11 or loader 160 is identified and if maintenance personnel are available, the central computer 155 dispatches the identified truck or loader to the maintenance shop for preventive maintenance work and/or notifies maintenance personnel to work on the loader 160.

With reference to equipment maintenance, if so desired by mine management, equipment maintenance can be incorporated with the sensor processing unit 101 and the central computer 155 data downloaded so that as equipment maintenance occurs, equipment maintenance costs can be accurately tracked, since the sensor processing unit 101 and

the central computer 155, via data downloading, will be tracking amount of equipment operating time, it will conversely be tracking equipment down time. As down time occurs, through the proper use of the operator number function of the sensor processing unit 101 and data downloading from this unit to a central computer 155 with the operator number function, it is possible to identify why a piece of equipment is down and through the proper use of operator number codes as well as when a piece of equipment goes back into service, and as this data is generated for downloading to the central computer 155 via the operator number code on keypad 122, the cost of all parts and supplies used during the time that the truck is out of service can be entered directly into the central computer 155 via the operator of the central computer, i.e., a truck is down for transmission repair. The code for transmission repair is entered, via the operator number code on keypad 122 into the sensor processing unit 101 for data downloading, when the truck goes back into service, the cost of parts and supplies to repair the transmission is entered into the central computer via the operator of the computer. If, however, the actual cost of transmission repairs is not immediately known as a truck goes back into service, when they do become known, the operator of the central computer 155 can still enter the cost of parts and supplies, what they were for, and during what time period they were incurred so that the central computer can go back and allocate for each period of equipment down time as identified from data downloaded from sensor processing unit 101, the cost of repair parts and supplies associated with that segment of equipment down time.

From the foregoing it will be appreciated that the on-board weighing device provides the sensor processing unit 101 with raw data that can be downloaded to a central computer for storage and analysis and then be refined to

provide indications of truck and operator efficiency. By analyzing various mining parameters based on this downloaded raw data, the truck performance can be improved, thereby reducing the substantial cost of operating off-road, heavy duty trucks.

THE CLAIMS DEFINING THE INVENTION ARE AS FOLLOWS:-

1. A system for acquisitioning and accumulating data indicative of the operation of a haulage vehicle said system comprising:

first means mounted to said vehicle for providing data indicative of a loading of material onto a body of said vehicle;

a first processor means on-board said vehicle for acquiring data from at least said first means and organizing said data to provide information regarding the performance of said vehicle;

a second means for accumulating said information from said first processor means so as to create a historical data base of haulage events defined by said information; and

a third means for providing data identifying said vehicle and distinguishing it from other vehicles and delivering the data to said processor means to be incorporated into said information.

2. A system as set forth in claim 1 including fourth means mounted to said vehicle for providing data indicative of the direction of movement of said vehicle and delivering the data to said first processor means to be incorporated into said information.

3. A system as set forth in claim 2 wherein said fourth means includes a device for detecting a forward-neutral-reverse status of a drive train associated with said haulage vehicle.

AUSTRALIAN PATENT OFFICE

4. A system as set forth in claim 1 including fourth means for sensing an unloading of said material loaded onto said body and providing data indicative of said unloading to said first processor means to be incorporated into said information; and

a fifth means responsive to said information for determining the elapsed time between said haulage events.

5. A system as set forth in claim 4 including a sixth means for incorporating data related to said elapsed time into said data base and a seventh means for deriving control data from said data base for routing said vehicle to selected locations.

6. A system as set forth in claim 1 including a fourth means and responsive to said first processor means for downloading said information to a remote site which includes said second means.

7. A system as set forth in claim 6 wherein said remote site includes a second processor means responsive to said downloaded information and said historical data base of haulage events for providing data for use in directing the future operation of said vehicle.

8. A system as set forth in claim 7 wherein said haulage vehicle is loaded by a bucket of a loading equipment and said first processor means includes means for determining the weight of each bucket and said historical data base of haulage event includes an average weight of a bucket over a plurality of loading cycles for said loading equipment.

9. A system as set forth in claim 6 wherein said haulage

AUSTRALIAN PATENT OFFICE

vehicle is loaded by a bucket of a loading equipment, said system including fifth means for determining when material carried by said bucket is loaded onto said body and incorporating said determination into said information.

10. A system as set forth in claim 9 including sixth means for recording the identity of said loading equipment and associating said identity with said determination of when said bucket is loaded onto said body.

11. A system as set forth in claim 10 wherein said sixth means includes means for determining the elapsed time from the loading of a first bucket in a load to the loading of a last bucket.

12. A system as set forth in claim 10 wherein said sixth means includes means for delivering said identity of said loading equipment and the associated determination of when said bucket is loaded onto said body to said first processor means to be incorporated into said information and made part of said historical data base of haulage events.

13. A system as set forth in claim 1 including fourth means mounted to said vehicle for marking data from said first means with an indication of time and delivering said marked data to said first processor means to be incorporated into said information.

14. A system as set forth in claim 1 including fourth means for providing data indicative of the unloading of said material by said body and delivering the data to said first processor means to be incorporated into said

AUSTRALIAN PATENT OFFICE

information.

15. A system as set forth in claim 1 including fourth means for providing data indicative of the distance travelled by said vehicle and delivering the data to said first processor means to be incorporated into said information.

16. A system as set forth in claim 1 including fourth means for providing data indicative of the entity controlling said vehicle and delivering the data to said first processor means to be incorporated into said information.

17. A system as set forth in claim 1 including a fourth means for providing data indicative of fuel usage of said vehicle and delivering the data to said first processor means to be incorporated into said information.

18. A system as set forth in claim 6, wherein said remote site includes a second processor means for receiving said information, said second processor means including means for creating and updating a historical data base of haulage events defined by said information.

19. A system as set forth in claim 1 wherein said first means also senses the unloading of material from said vehicle and incorporates this data into said information to form a data stream, and

means responsive to said data stream for determining the time of a haul cycle for said vehicle.

20. A system as set forth in claim 19 including:

means for creating a data base from said haul cycle

AUSTRALIAN PATENT OFFICE

times and processing said data stream to derive control data for commanding the routing of said vehicle to selected locations.

DATED this 11th day of May, 1990.

LEROY G. HAGENBUCH.

Attorney: WILLIAM S. LLOYD

Fellow Institute of Patent Attorneys of Australia

of SHELSTON WATERS

AUSTRALIAN PATENT OFFICE

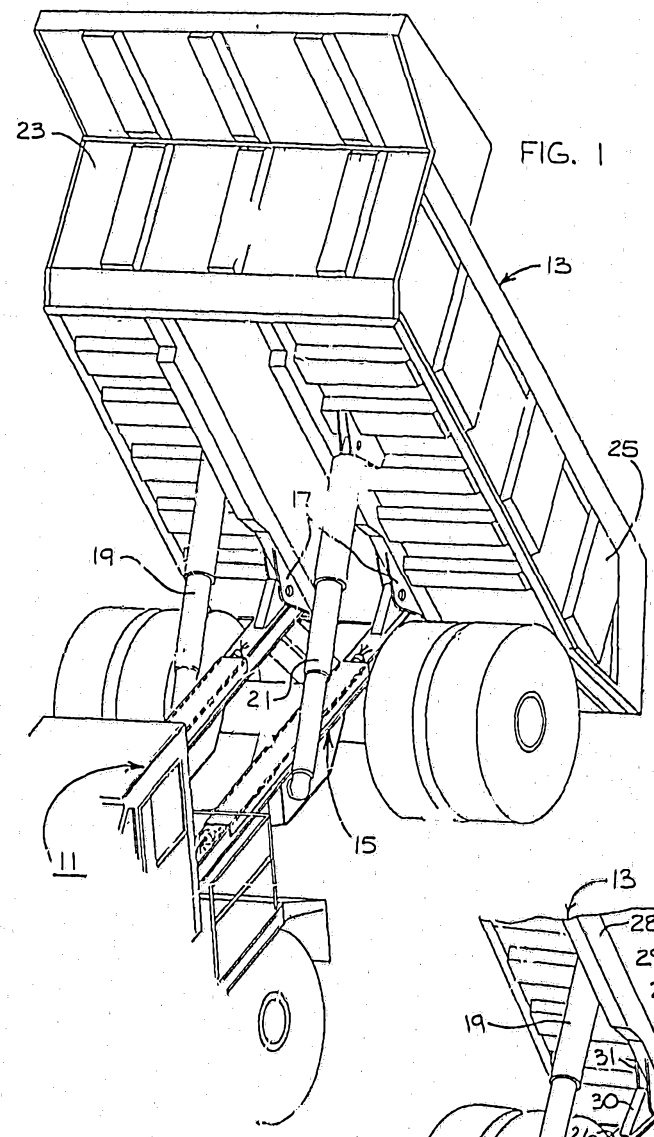
23
13
25
17
19
21
15
11

FIG. 1

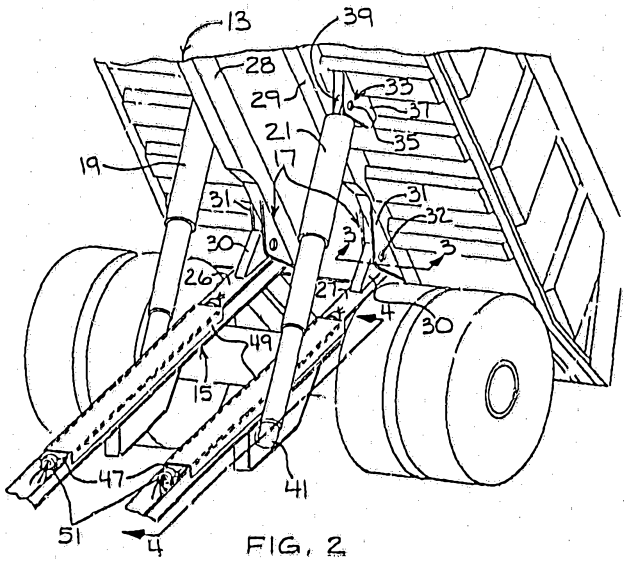
13
39
28
29
33
37
35
21
17
19
31
32
30
26
27
49
15
47
41
51
4

FIG. 2

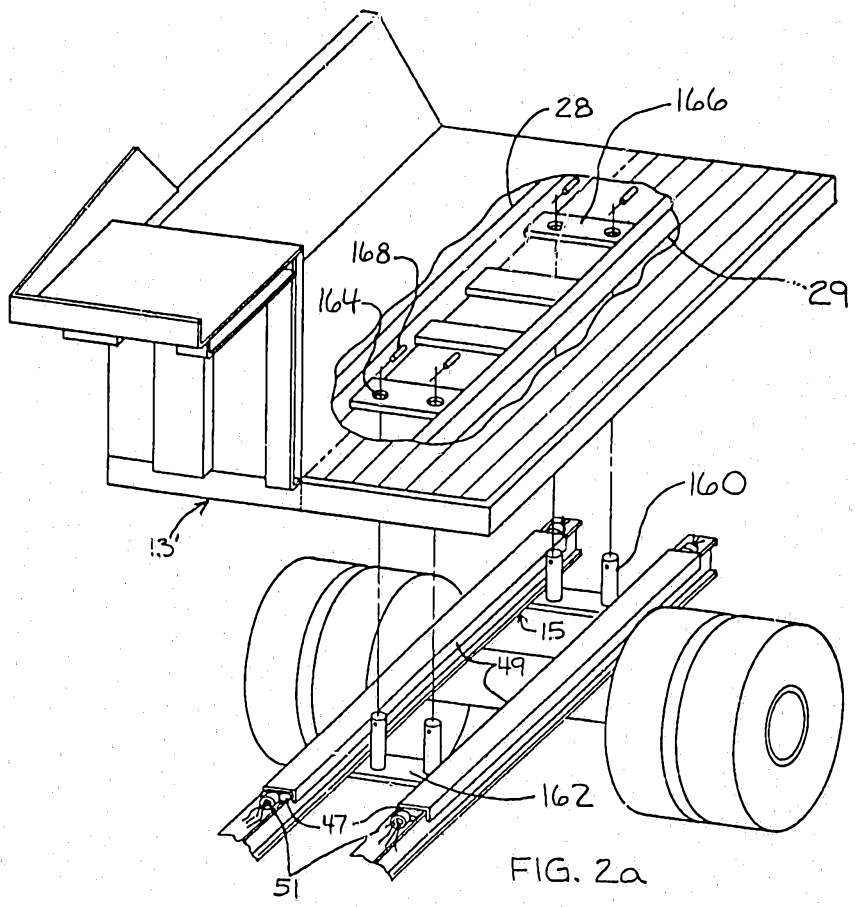

FIG. 2a

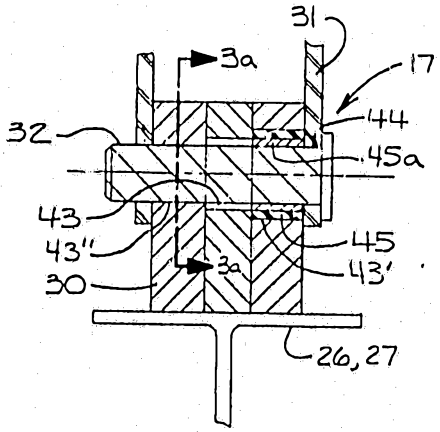

FIG. 3

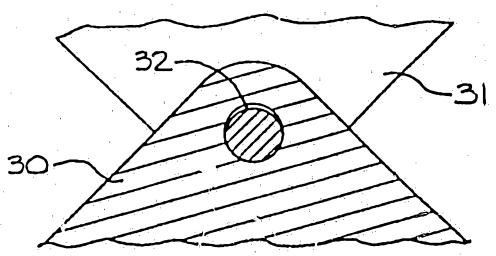

FIG. 3a

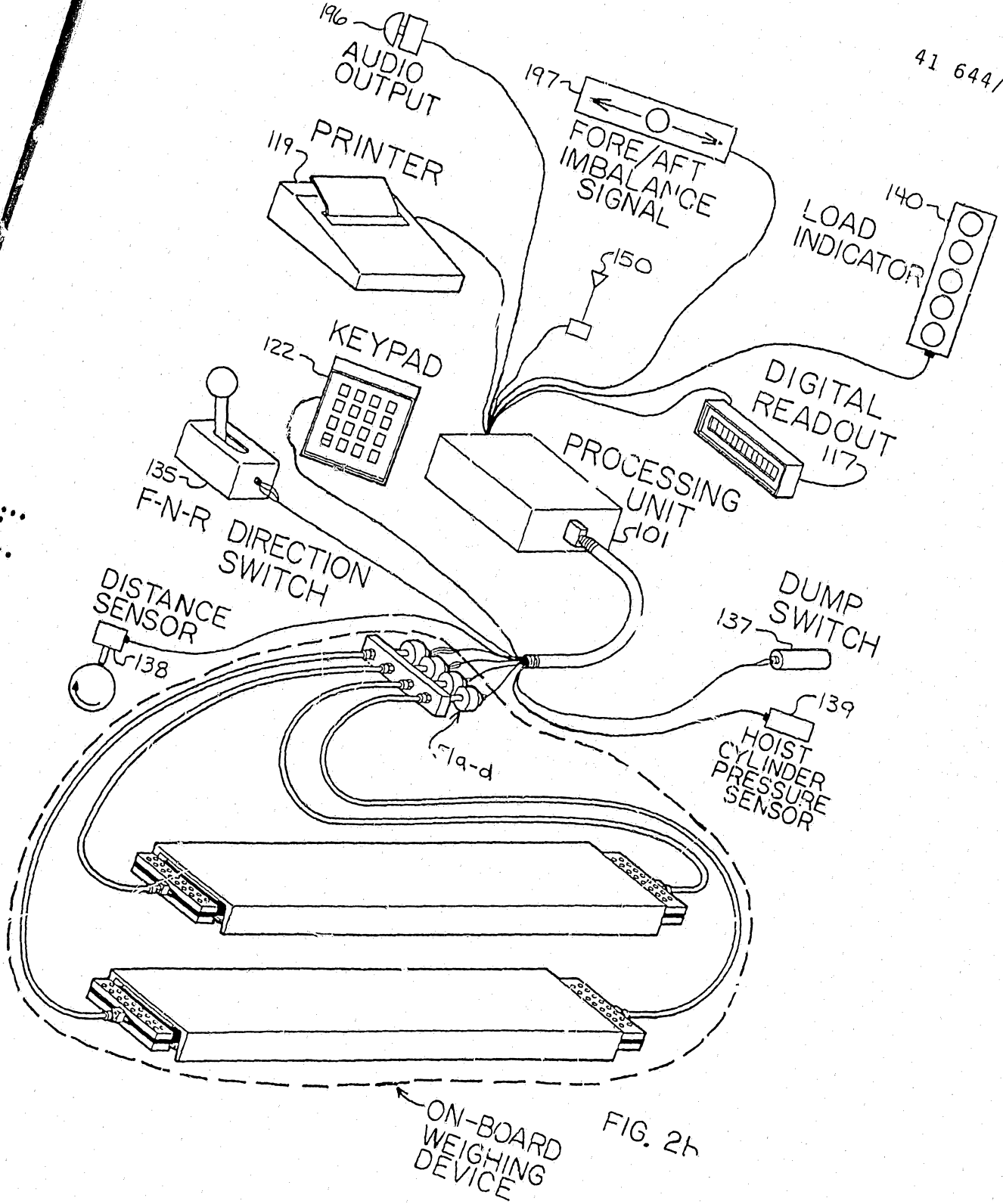
196
AUDIO OUTPUT
197
FORE/AFT IMBALANCE SIGNAL
119
PRINTER
150
140
LOAD INDICATOR
122
KEYPAD
DIGITAL READOUT
117
PROCESSING UNIT
101
135
F-N-R DIRECTION SWITCH
DISTANCE SENSOR
138
DUMP SWITCH
137
139
HOIST CYLINDER PRESSURE SENSOR
41a-d
ON-BOARD WEIGHING DEVICE

FIG. 2h

15 7 85 41644

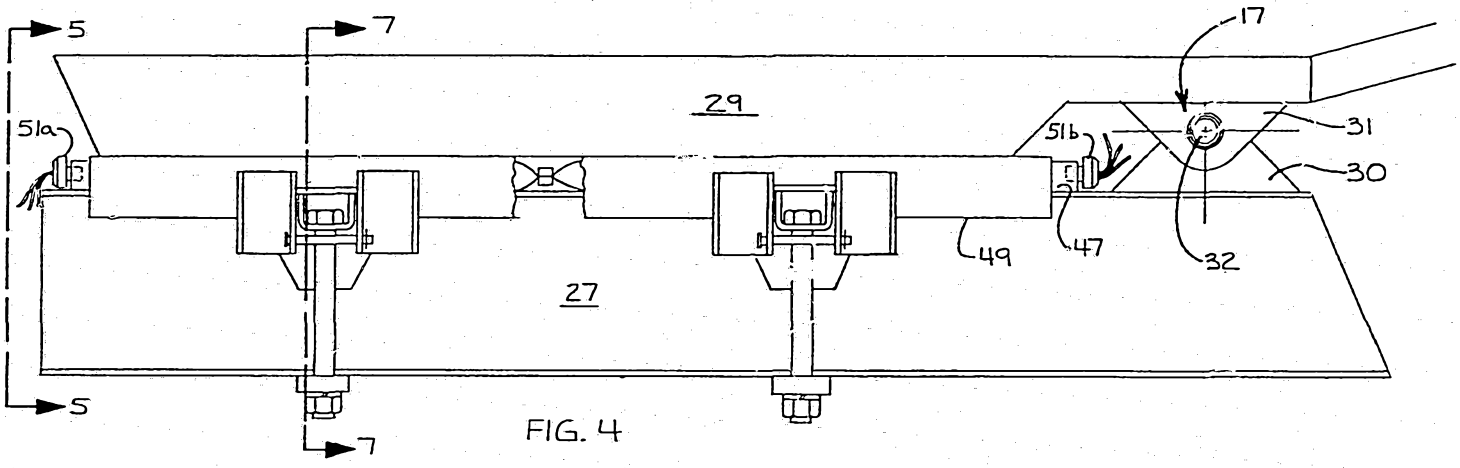

FIG. 4

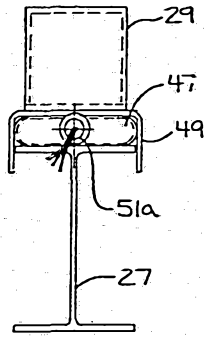

FIG. 5

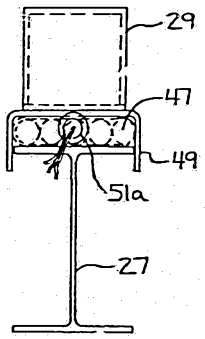

FIG. 5a

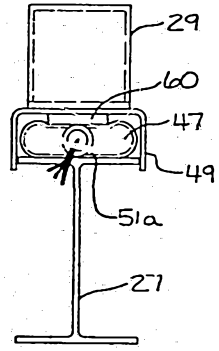

FIG. 6

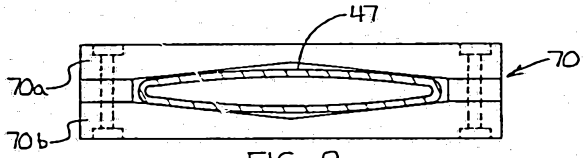

FIG. 9

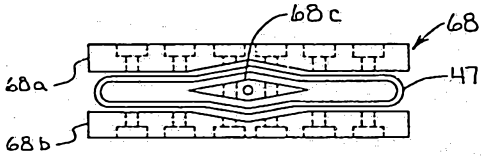

FIG. 8a

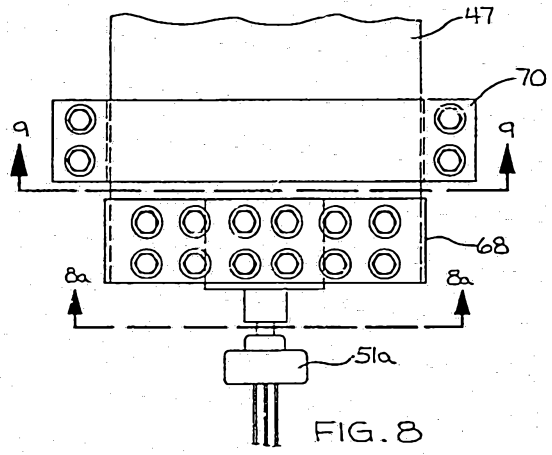

FIG. 8

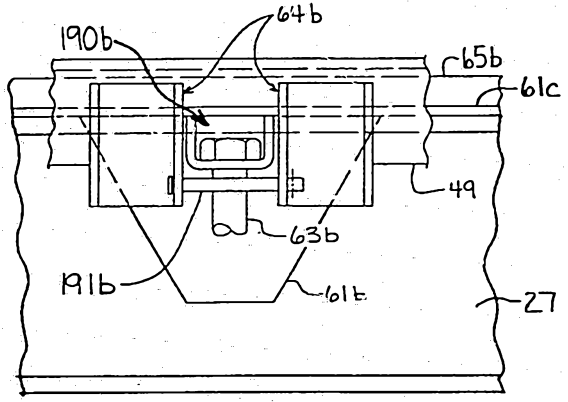

FIG. 7a

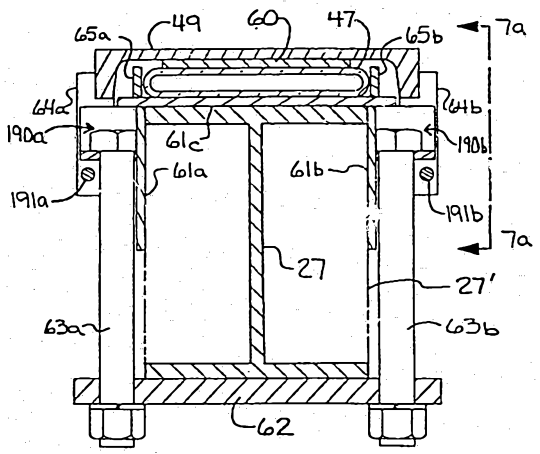

FIG. 7

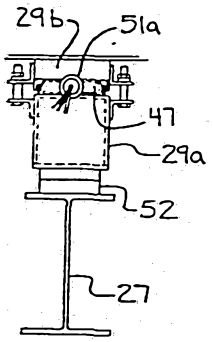

FIG. 11

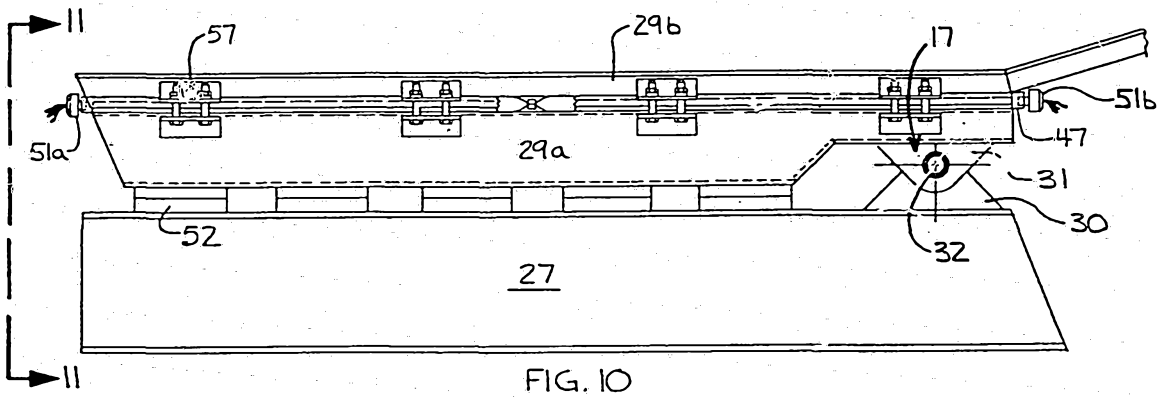

FIG. 10

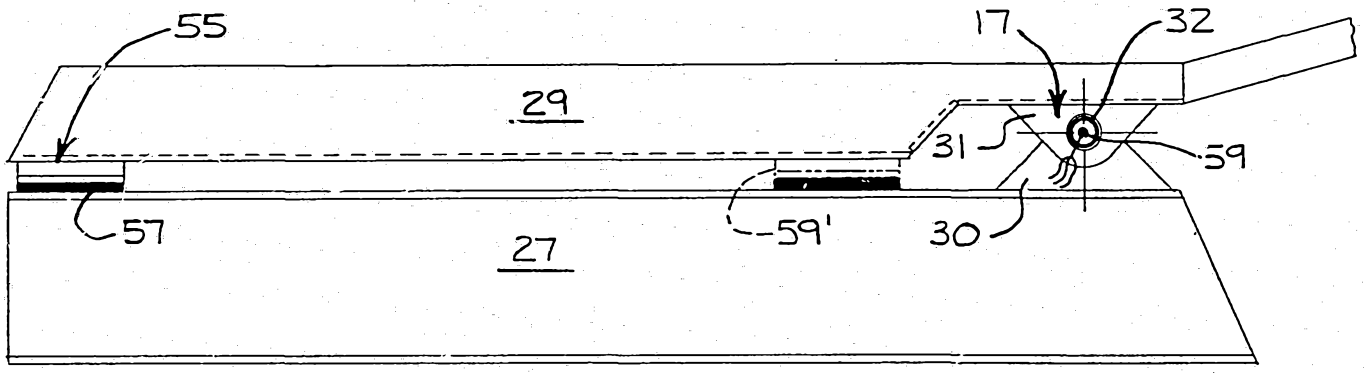

FIG. 12

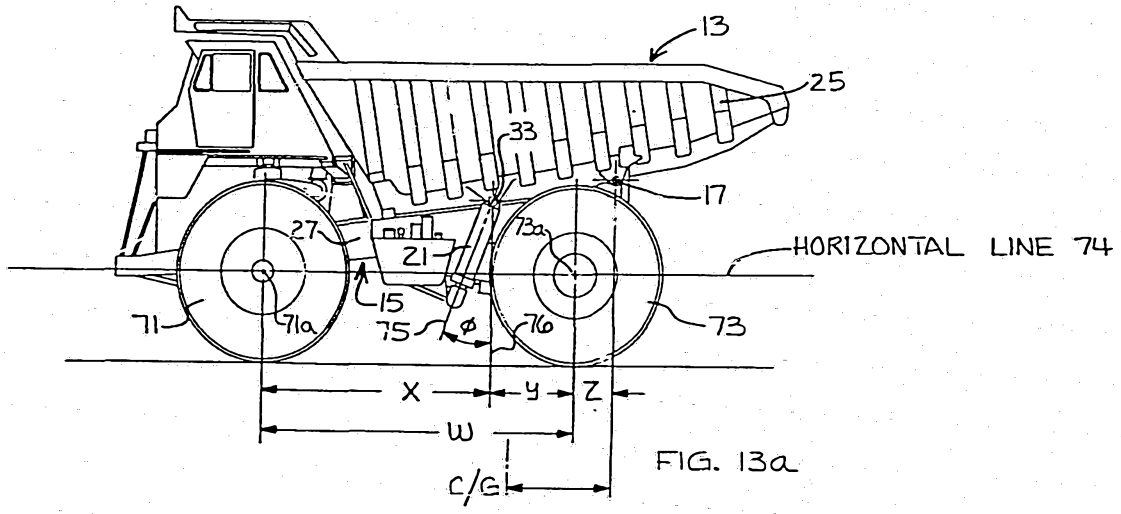

FIG. 13a

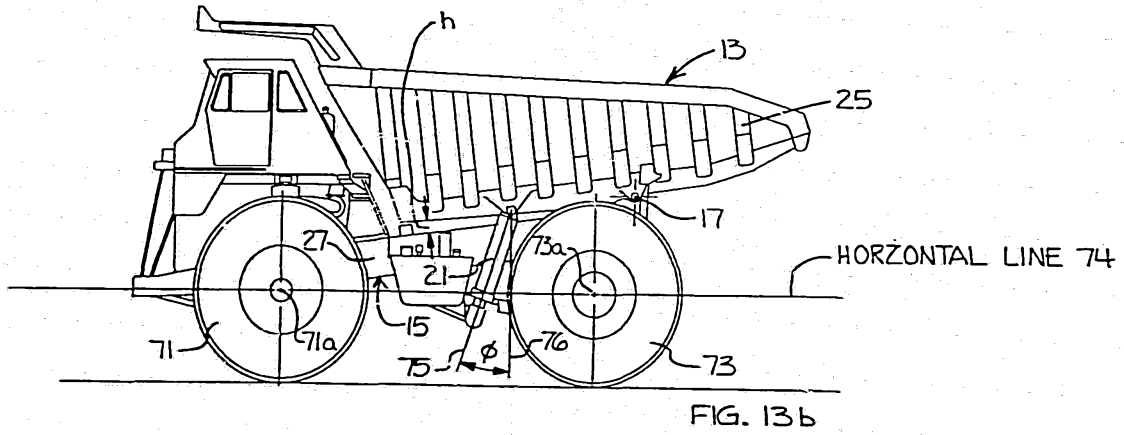

FIG. 13b

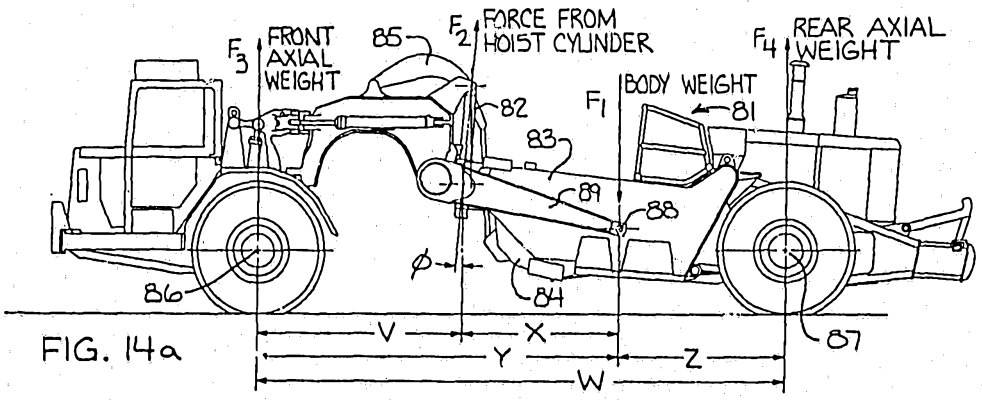

FIG. 14a

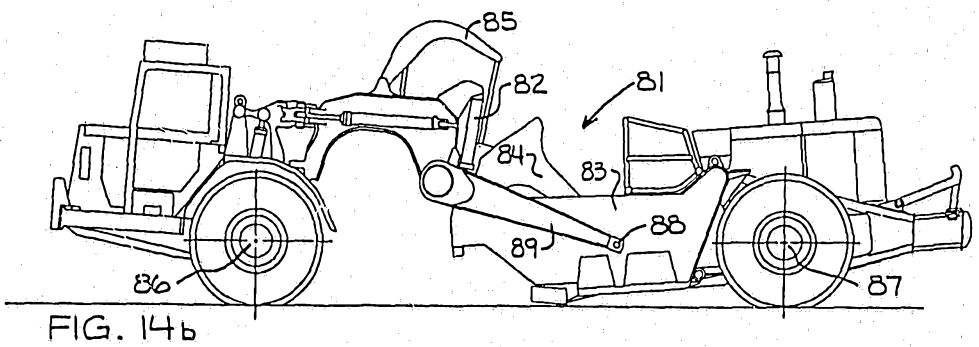

FIG. 14b

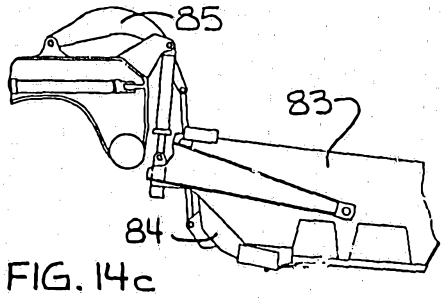

FIG. 14c

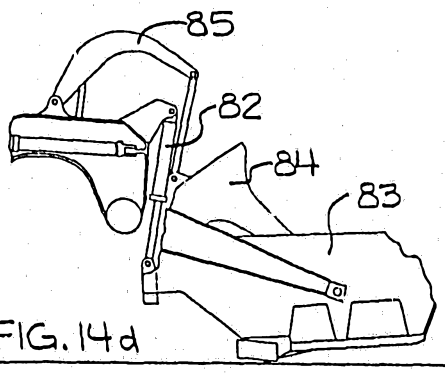

FIG. 14d

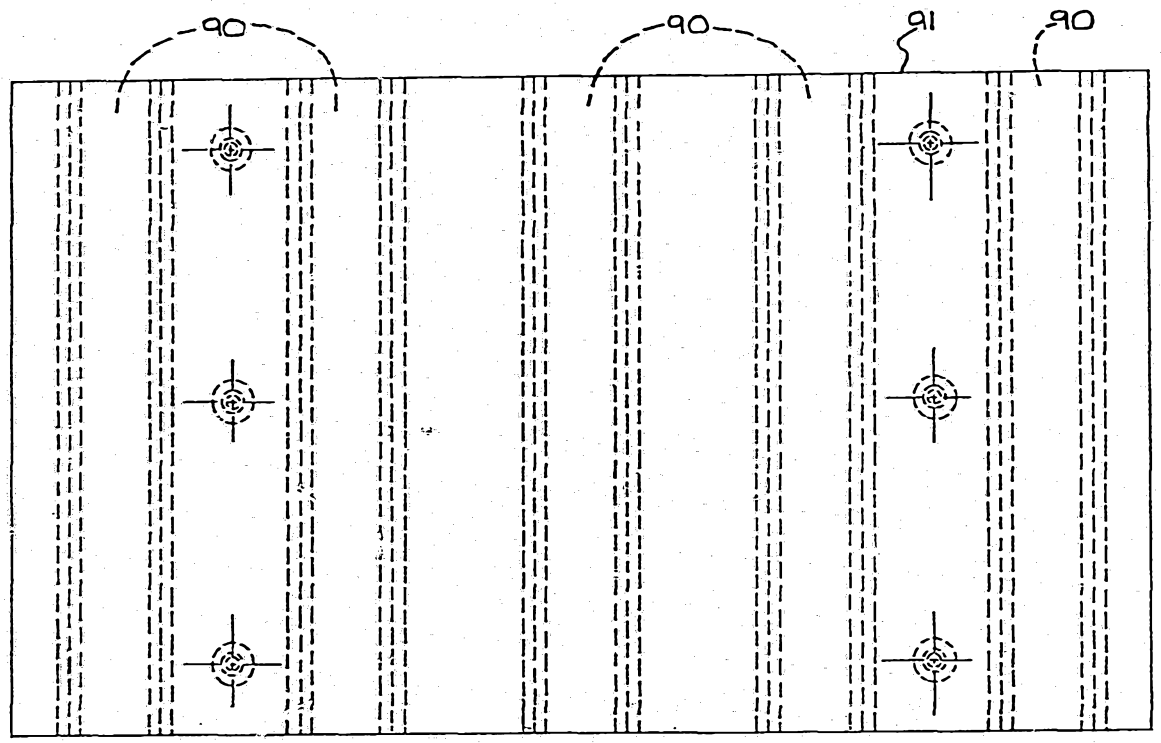

FIG. 15a

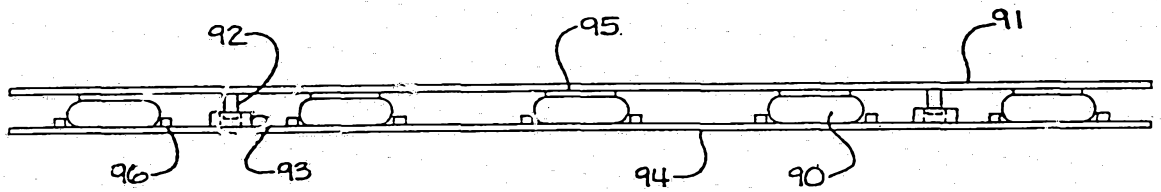

FIG. 15b

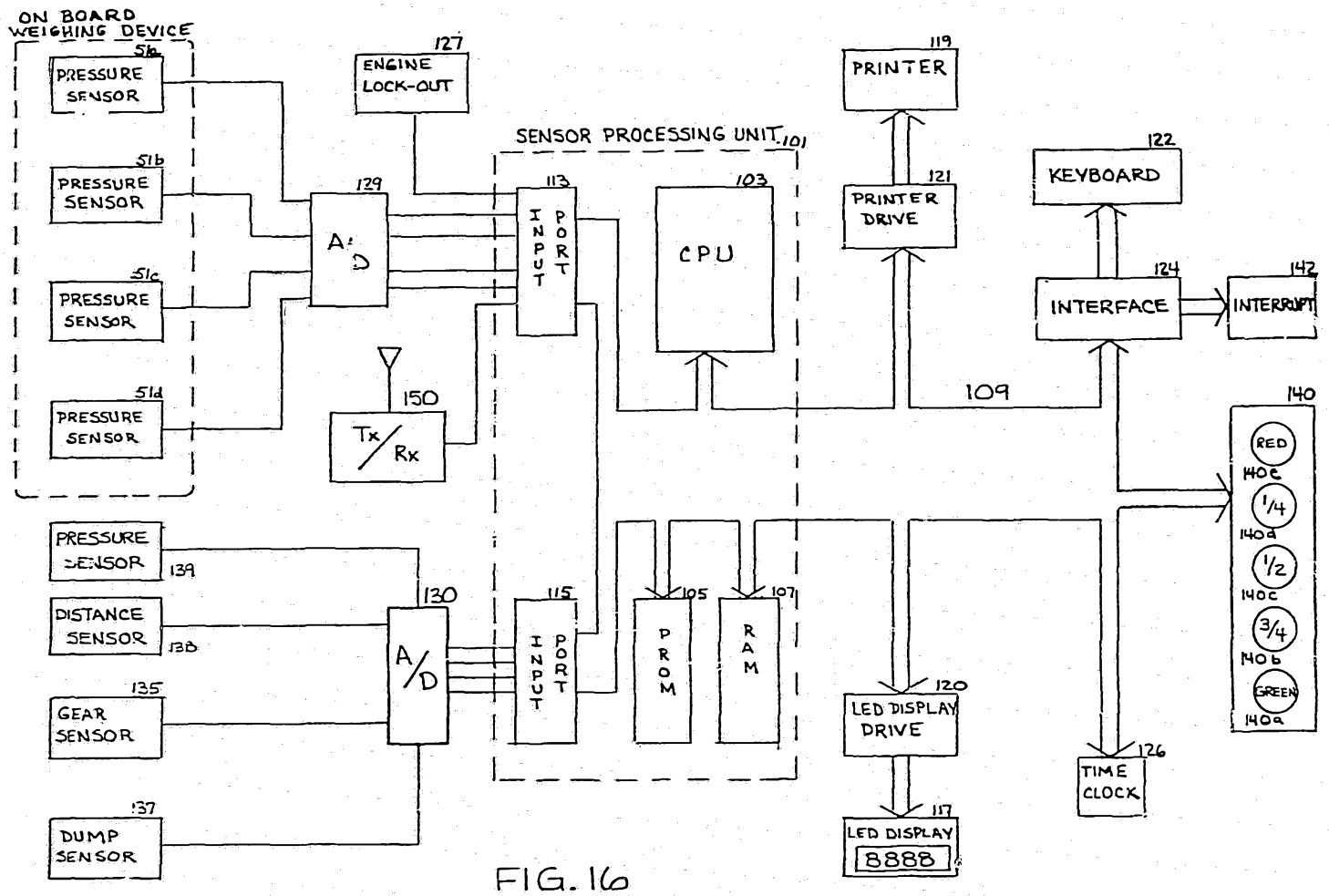
ON BOARD WEIGHING DEVICE
PRESSURE SENSOR
51a
PRESSURE SENSOR
51b
PRESSURE SENSOR
51c
PRESSURE SENSOR
51d
ENGINE LOCK-OUT
127
SENSOR PROCESSING UNIT
101
A/D
129
INPUT PORT
113
CPU
103
PRINTER
119
PRINTER DRIVE
121
KEYBOARD
122
INTERFACE
124
INTERRUPT
142
109
150
Tx/Rx
PRESSURE SENSOR
139
DISTANCE SENSOR
138
GEAR SENSOR
135
DUMP SENSOR
137
A/D
130
INPUT PORT
115
PROM
105
RAM
107
LED DISPLAY DRIVE
120
LED DISPLAY
8888
117
TIME CLOCK
126
140
RED
140e
1/4
140d
1/2
140c
3/4
140b
GREEN
140a

FIG. 16

RAM 107

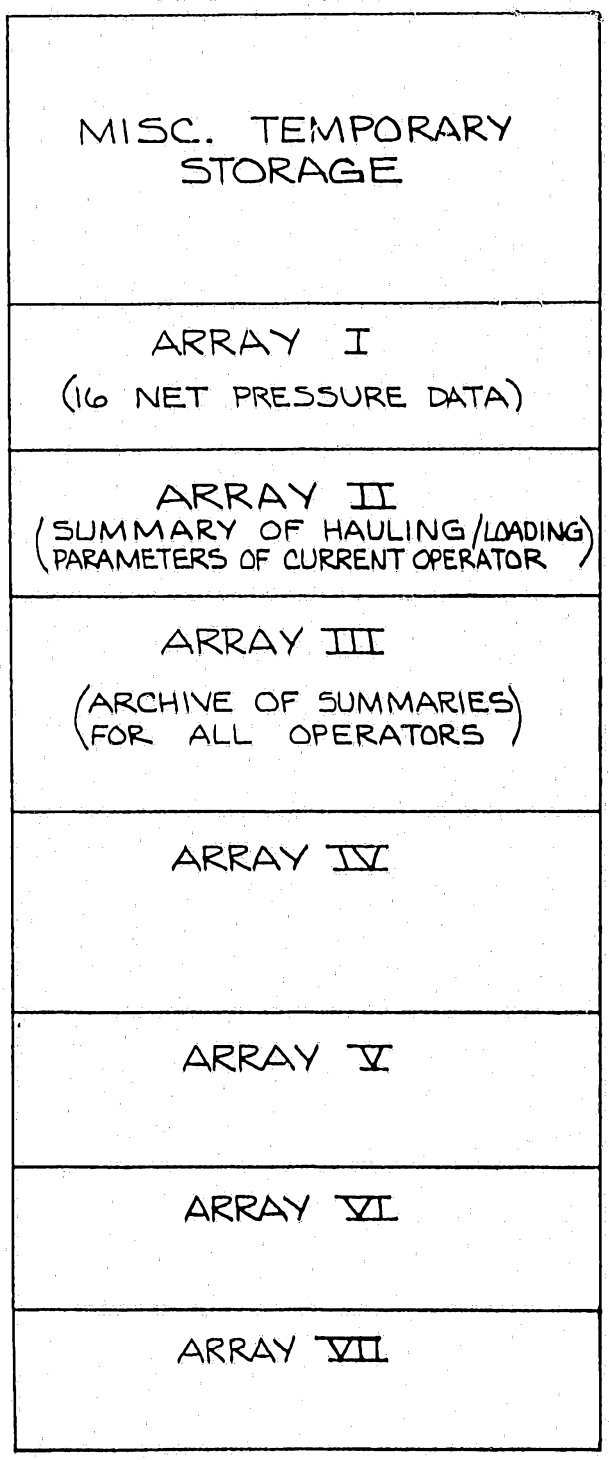

FIG. 16a

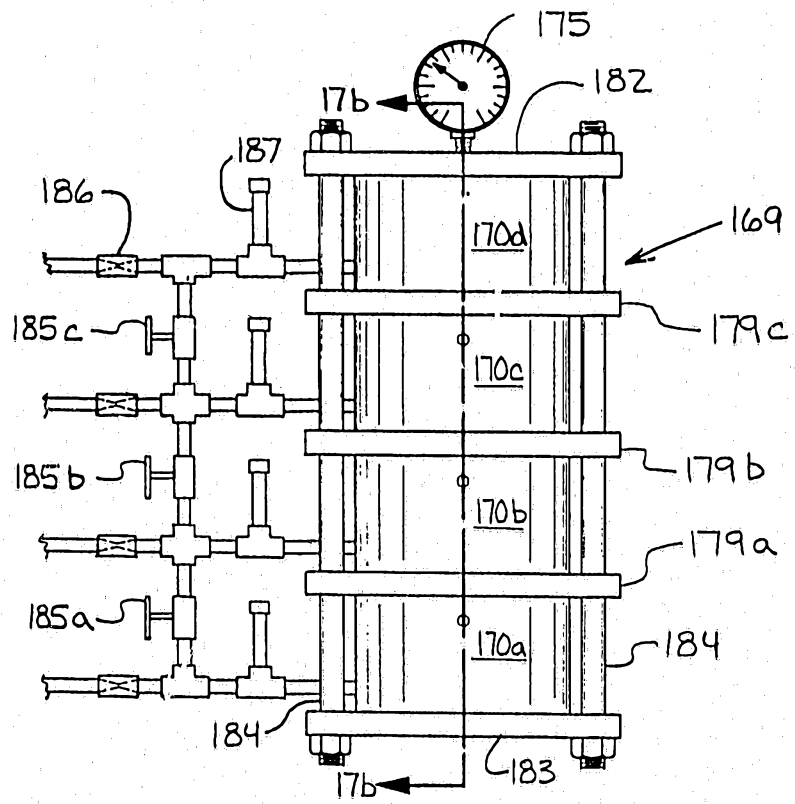

FIG. 17a

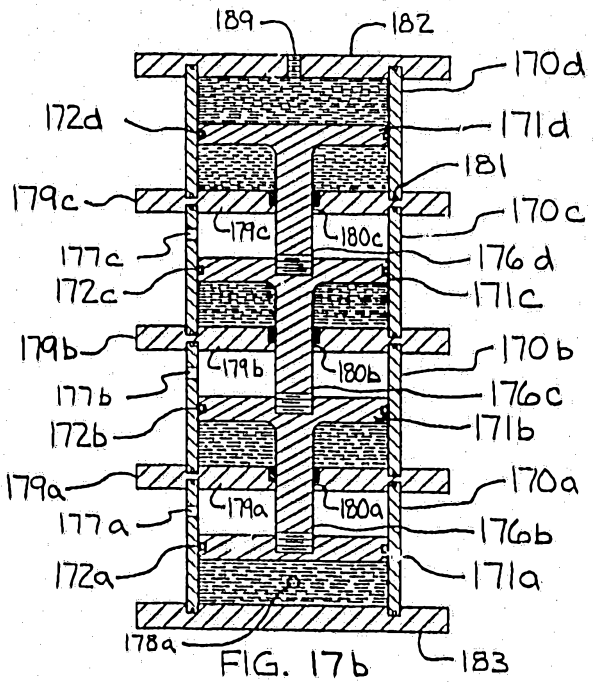

FIG. 17b

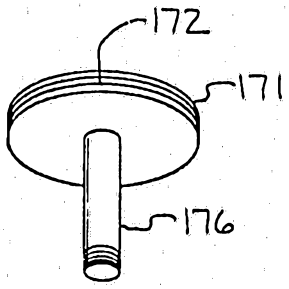

FIG. 17c

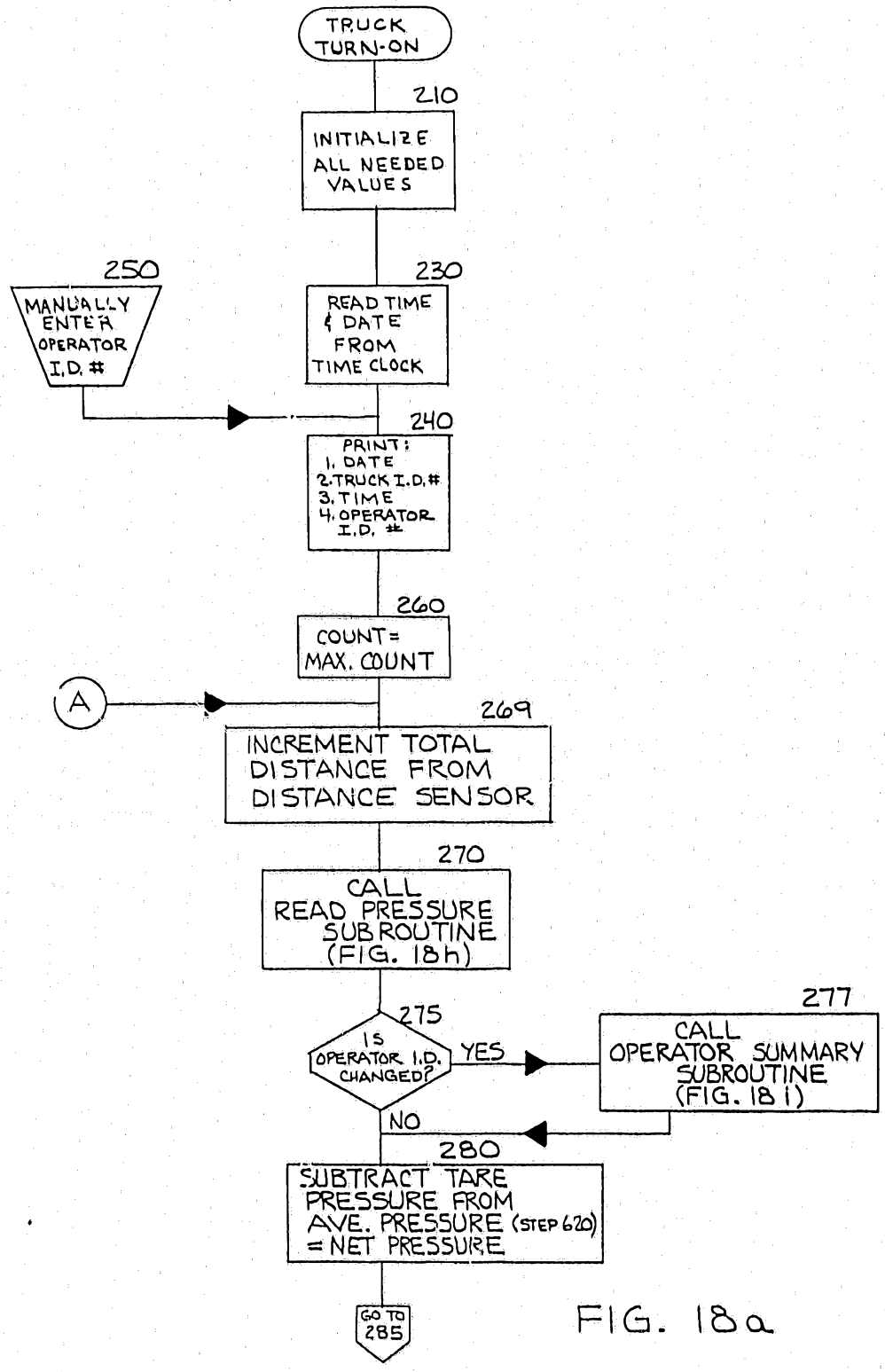
TRUCK TURN-ON
210
INITIALIZE ALL NEEDED VALUES
250
MANUALLY ENTER OPERATOR I.D. #
230
READ TIME & DATE FROM TIME CLOCK
240
PRINT: 1. DATE 2. TRUCK I.D.# 3. TIME 4. OPERATOR I.D. #
260
COUNT = MAX. COUNT
A
269
INCREMENT TOTAL DISTANCE FROM DISTANCE SENSOR
270
CALL READ PRESSURE SUBROUTINE (FIG. 18h)
275
IS OPERATOR I.D. CHANGED?
YES
277
CALL OPERATOR SUMMARY SUBROUTINE (FIG. 18i)
NO
280
SUBTRACT TARE PRESSURE FROM AVE. PRESSURE (STEP 620) = NET PRESSURE
GO TO 285

FIG. 18a

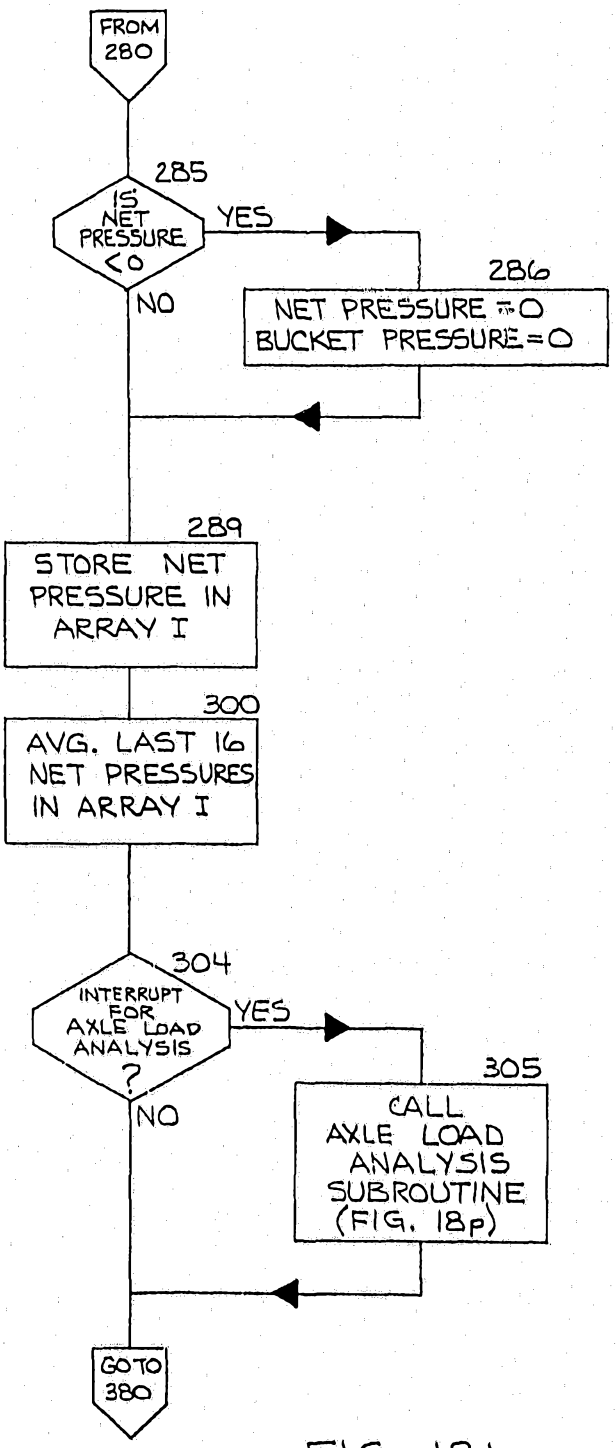
FROM 280
285
IS NET PRESSURE <0
YES
NO
286
NET PRESSURE = 0
BUCKET PRESSURE = 0
289
STORE NET PRESSURE IN ARRAY I
300
AVG. LAST 16 NET PRESSURES IN ARRAY I
304
INTERRUPT FOR AXLE LOAD ANALYSIS ?
YES
NO
305
CALL AXLE LOAD ANALYSIS SUBROUTINE (FIG. 18p)
GO TO 380

FIG. 18b

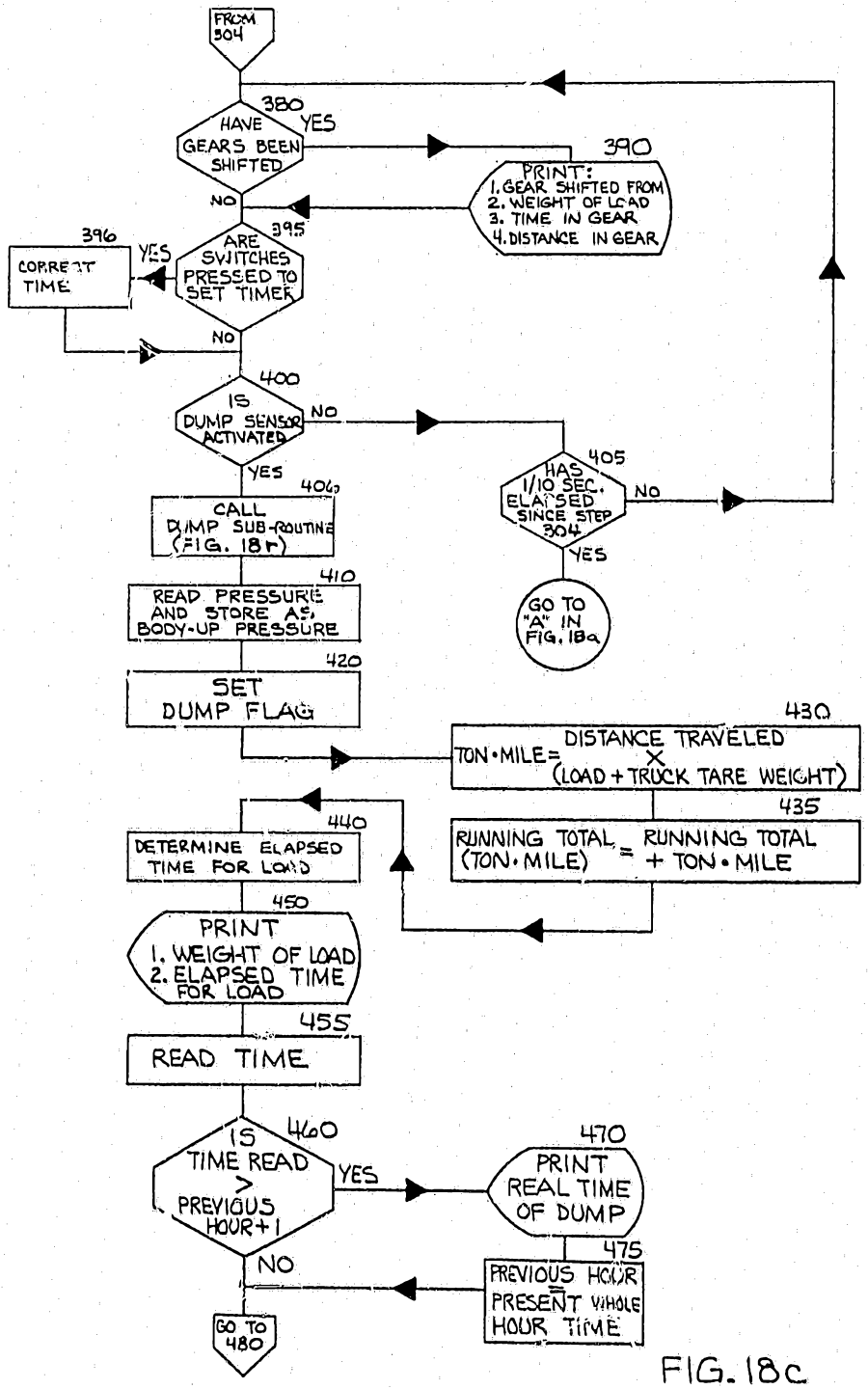
FROM 304
380
HAVE GEARS BEEN SHIFTED
YES
390
PRINT:
1. GEAR SHIFTED FROM
2. WEIGHT OF LOAD
3. TIME IN GEAR
4. DISTANCE IN GEAR
NO
396
CORRECT TIME
YES
395
ARE SWITCHES PRESSED TO SET TIMER
NO
400
IS DUMP SENSOR ACTIVATED
NO
405
HAS 1/10 SEC. ELAPSED SINCE STEP 304
NO
YES
GO TO "A" IN FIG. 18a
YES
406
CALL DUMP SUB-ROUTINE (FIG. 18r)
410
READ PRESSURE AND STORE AS BODY-UP PRESSURE
420
SET DUMP FLAG
430
TON•MILE = DISTANCE TRAVELED X (LOAD + TRUCK TARE WEIGHT)
435
RUNNING TOTAL (TON•MILE) = RUNNING TOTAL + TON•MILE
440
DETERMINE ELAPSED TIME FOR LOAD
450
PRINT
1. WEIGHT OF LOAD
2. ELAPSED TIME FOR LOAD
455
READ TIME
460
IS TIME READ > PREVIOUS HOUR+1
YES
470
PRINT REAL TIME OF DUMP
475
PREVIOUS HOUR = PRESENT WHOLE HOUR TIME
NO
GO TO 480

FIG. 18c

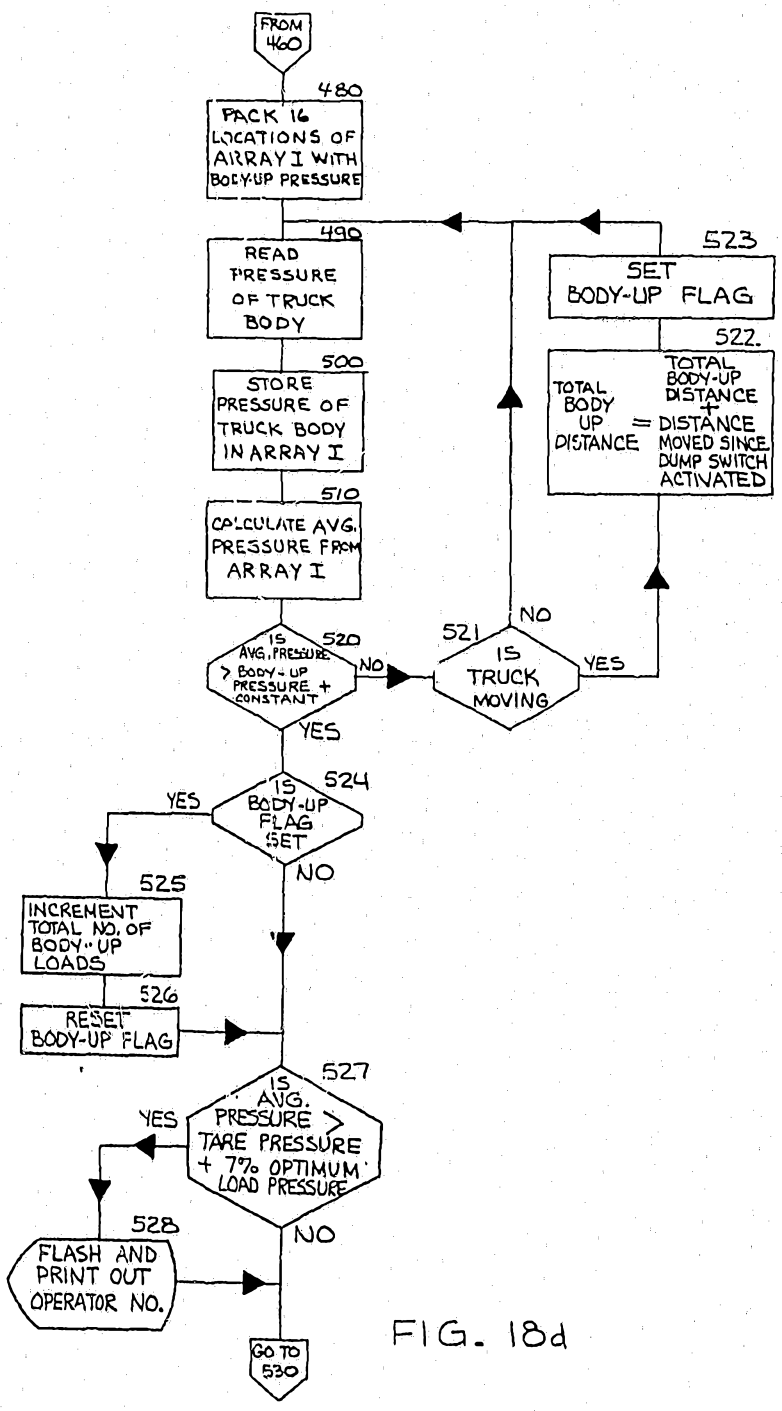
FROM 460
480
PACK 16 LOCATIONS OF ARRAY I WITH BODY-UP PRESSURE
490
READ PRESSURE OF TRUCK BODY
500
STORE PRESSURE OF TRUCK BODY IN ARRAY I
510
CALCULATE AVG. PRESSURE FROM ARRAY I
520
IS AVG. PRESSURE > BODY-UP PRESSURE + CONSTANT
NO
YES
521
IS TRUCK MOVING
NO
YES
523
SET BODY-UP FLAG
522.
TOTAL BODY UP DISTANCE = TOTAL BODY-UP DISTANCE + DISTANCE MOVED SINCE DUMP SWITCH ACTIVATED
524
IS BODY-UP FLAG SET
YES
NO
525
INCREMENT TOTAL NO. OF BODY-UP LOADS
526
RESET BODY-UP FLAG
527
IS AVG. PRESSURE > TARE PRESSURE + 7% OPTIMUM LOAD PRESSURE
YES
NO
528
FLASH AND PRINT OUT OPERATOR NO.
GO TO 530

FIG. 18d

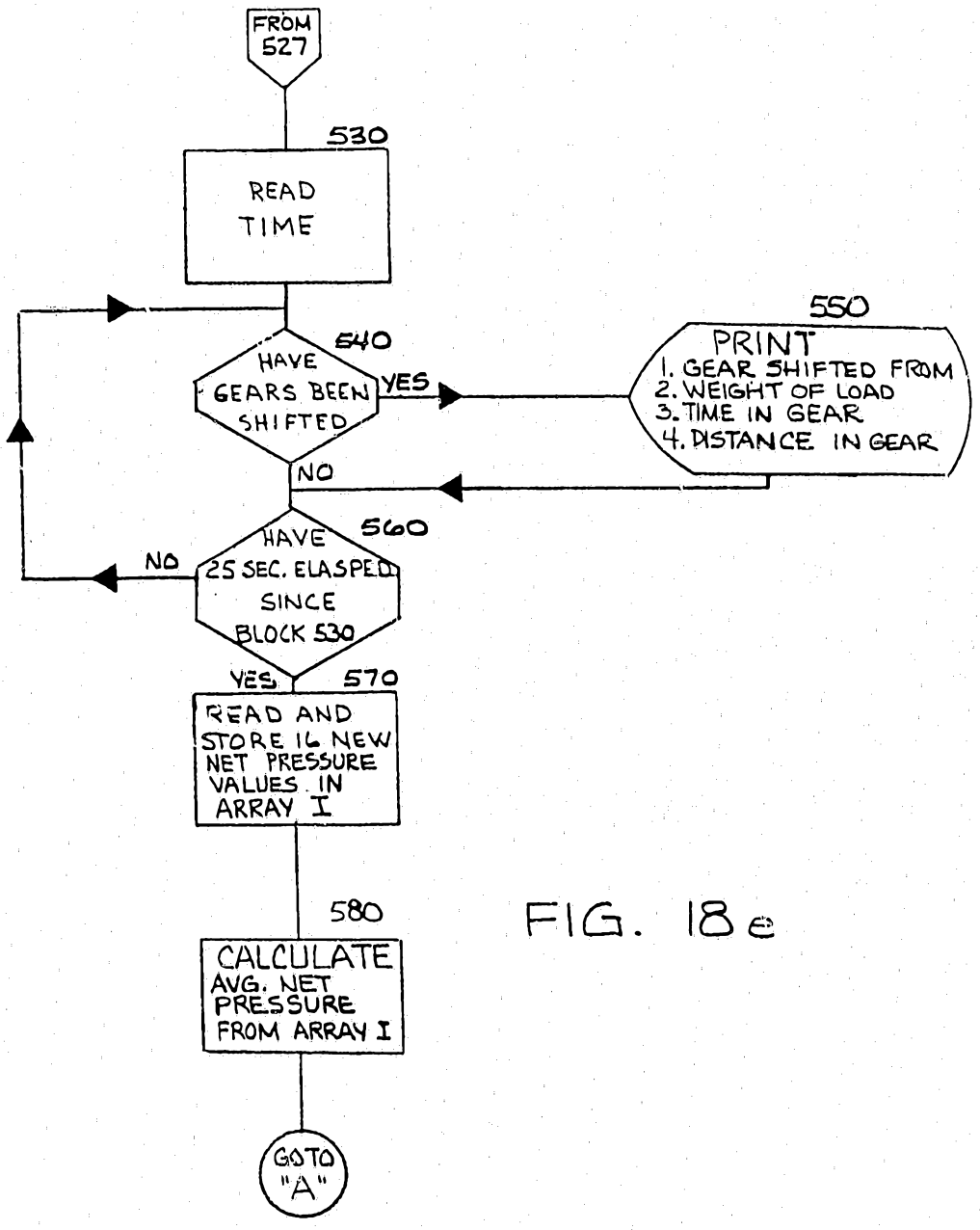
FROM 527
530
READ TIME
540
HAVE GEARS BEEN SHIFTED
YES
550
PRINT
1. GEAR SHIFTED FROM
2. WEIGHT OF LOAD
3. TIME IN GEAR
4. DISTANCE IN GEAR
NO
560
HAVE 25 SEC. ELASPED SINCE BLOCK 530
NO
YES
570
READ AND STORE 16 NEW NET PRESSURE VALUES IN ARRAY I
580
CALCULATE AVG. NET PRESSURE FROM ARRAY I
GOTO "A"

FIG. 18e

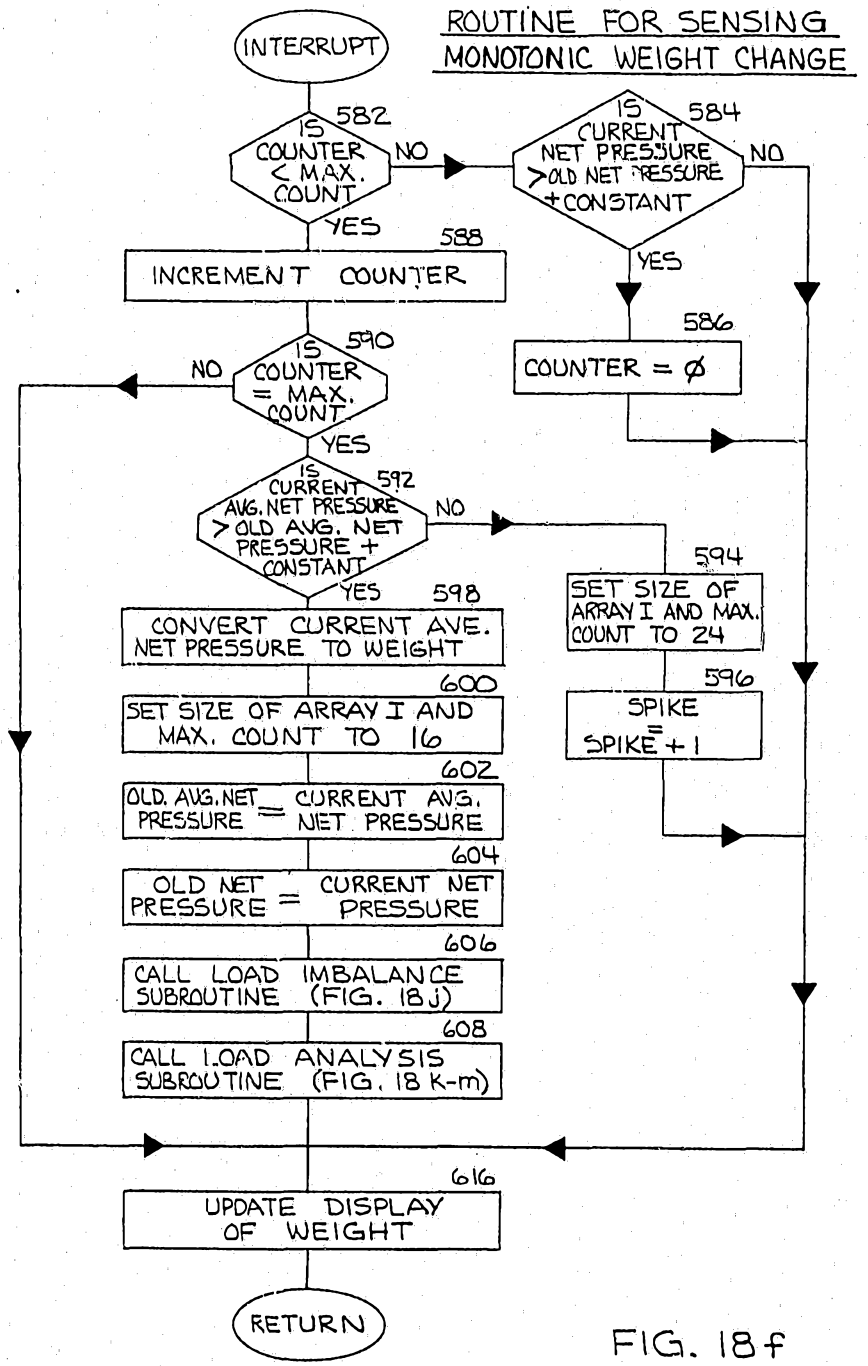
ROUTINE FOR SENSING MONOTONIC WEIGHT CHANGE
INTERRUPT
582
IS COUNTER < MAX. COUNT
NO
YES
584
IS CURRENT NET PRESSURE > OLD NET PRESSURE + CONSTANT
NO
YES
588
INCREMENT COUNTER
586
COUNTER = Ø
590
IS COUNTER = MAX. COUNT
NO
YES
592
IS CURRENT AVG. NET PRESSURE > OLD AVG. NET PRESSURE + CONSTANT
NO
YES
594
SET SIZE OF ARRAY I AND MAX. COUNT TO 24
596
SPIKE = SPIKE + 1
598
CONVERT CURRENT AVE. NET PRESSURE TO WEIGHT
600
SET SIZE OF ARRAY I AND MAX. COUNT TO 16
602
OLD AVG. NET PRESSURE = CURRENT AVG. NET PRESSURE
604
OLD NET PRESSURE = CURRENT NET PRESSURE
606
CALL LOAD IMBALANCE SUBROUTINE (FIG. 18j)
608
CALL LOAD ANALYSIS SUBROUTINE (FIG. 18 K-m)
616
UPDATE DISPLAY OF WEIGHT
RETURN

FIG. 18f

READ PRESSURE SUBROUTINE

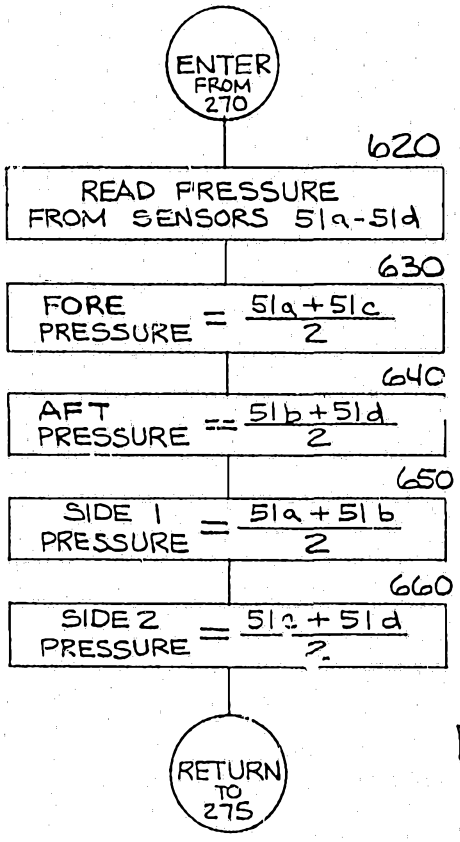

FIG. 18h

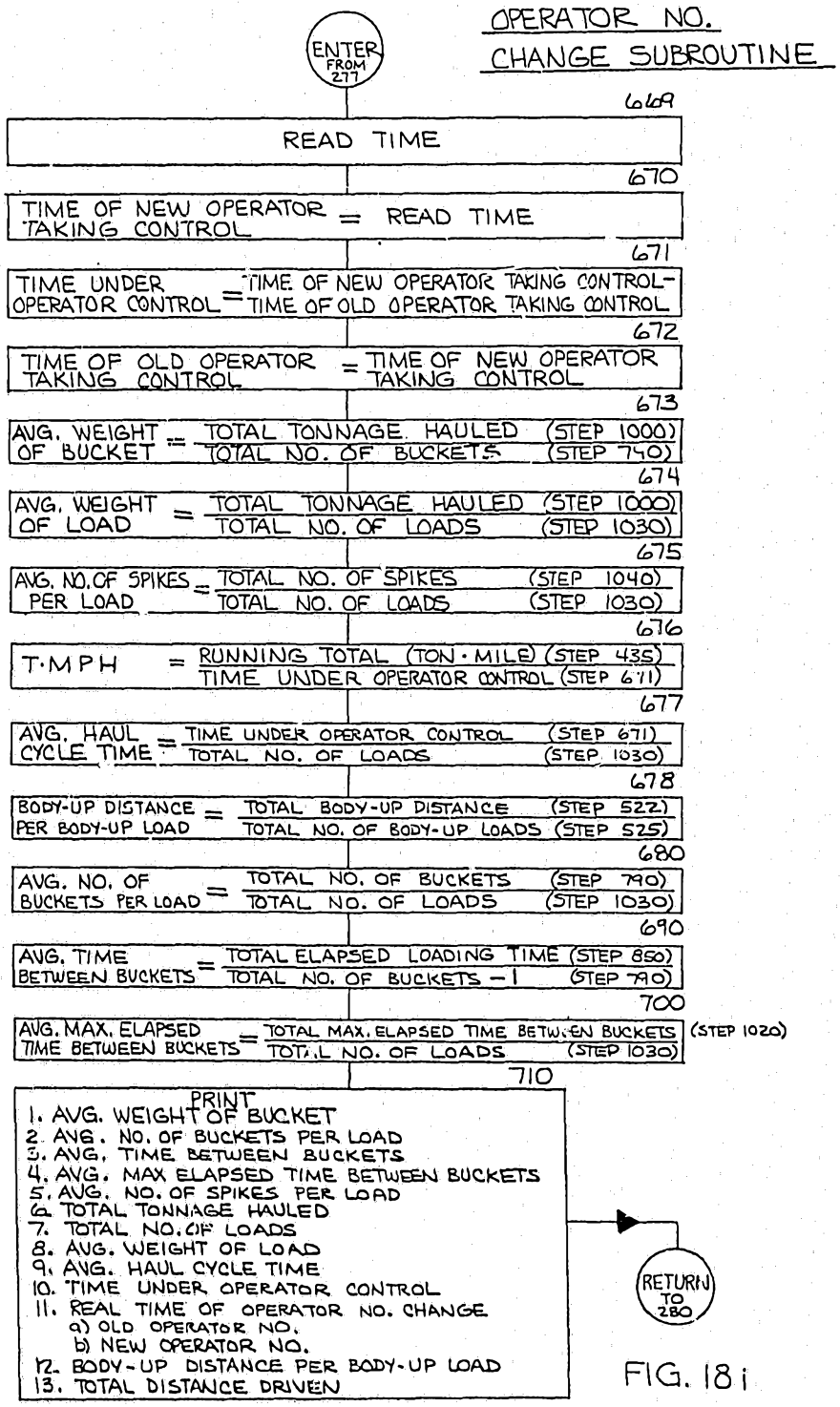
OPERATOR NO. CHANGE SUBROUTINE
ENTER FROM 277
669
READ TIME
670
TIME OF NEW OPERATOR TAKING CONTROL = READ TIME
671
TIME UNDER OPERATOR CONTROL = TIME OF NEW OPERATOR TAKING CONTROL - TIME OF OLD OPERATOR TAKING CONTROL
672
TIME OF OLD OPERATOR TAKING CONTROL = TIME OF NEW OPERATOR TAKING CONTROL
673
AVG. WEIGHT OF BUCKET = TOTAL TONNAGE HAULED (STEP 1000) / TOTAL NO. OF BUCKETS (STEP 790)
674
AVG. WEIGHT OF LOAD = TOTAL TONNAGE HAULED (STEP 1000) / TOTAL NO. OF LOADS (STEP 1030)
675
AVG. NO. OF SPIKES PER LOAD = TOTAL NO. OF SPIKES (STEP 1040) / TOTAL NO. OF LOADS (STEP 1030)
676
T·MPH = RUNNING TOTAL (TON·MILE) (STEP 435) / TIME UNDER OPERATOR CONTROL (STEP 671)
677
AVG. HAUL CYCLE TIME = TIME UNDER OPERATOR CONTROL (STEP 671) / TOTAL NO. OF LOADS (STEP 1030)
678
BODY-UP DISTANCE PER BODY-UP LOAD = TOTAL BODY-UP DISTANCE (STEP 522) / TOTAL NO. OF BODY-UP LOADS (STEP 525)
680
AVG. NO. OF BUCKETS PER LOAD = TOTAL NO. OF BUCKETS (STEP 790) / TOTAL NO. OF LOADS (STEP 1030)
690
AVG. TIME BETWEEN BUCKETS = TOTAL ELAPSED LOADING TIME (STEP 850) / TOTAL NO. OF BUCKETS - 1 (STEP 790)
700
AVG. MAX. ELAPSED TIME BETWEEN BUCKETS = TOTAL MAX. ELAPSED TIME BETWEEN BUCKETS (STEP 1020) / TOTAL NO. OF LOADS (STEP 1030)
710
PRINT
1. AVG. WEIGHT OF BUCKET
2. AVG. NO. OF BUCKETS PER LOAD
3. AVG. TIME BETWEEN BUCKETS
4. AVG. MAX ELAPSED TIME BETWEEN BUCKETS
5. AVG. NO. OF SPIKES PER LOAD
6. TOTAL TONNAGE HAULED
7. TOTAL NO. OF LOADS
8. AVG. WEIGHT OF LOAD
9. AVG. HAUL CYCLE TIME
10. TIME UNDER OPERATOR CONTROL
11. REAL TIME OF OPERATOR NO. CHANGE
a) OLD OPERATOR NO.
b) NEW OPERATOR NO.
12. BODY-UP DISTANCE PER BODY-UP LOAD
13. TOTAL DISTANCE DRIVEN
RETURN TO 280

FIG. 18i

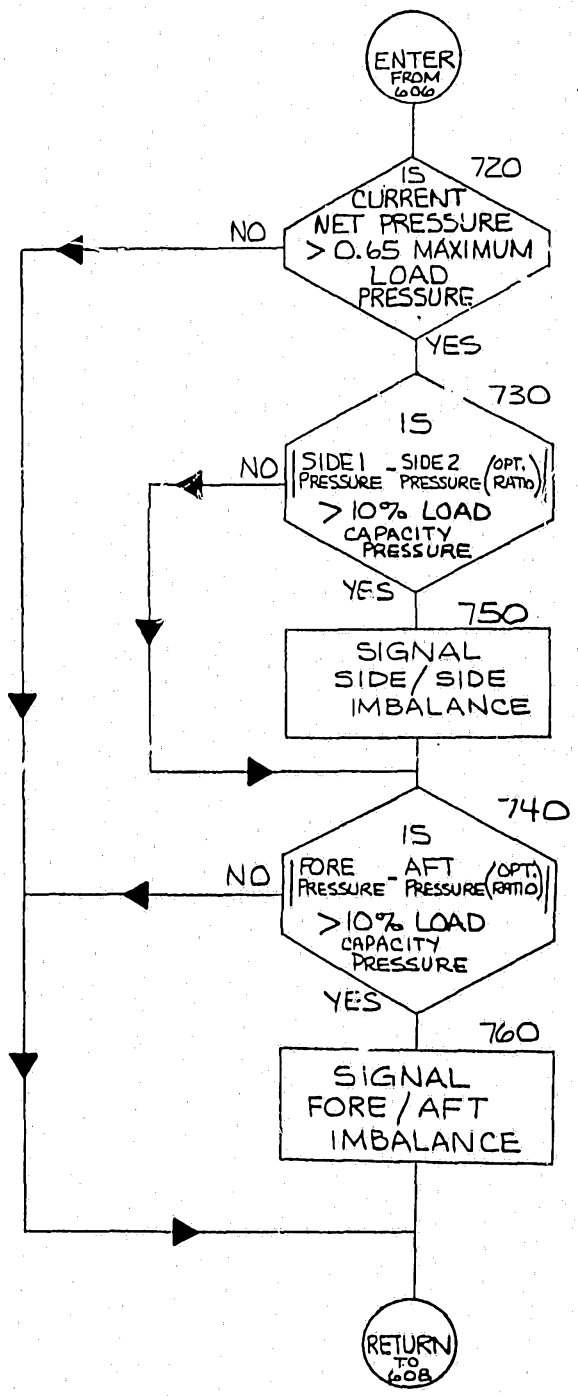
ENTER FROM 606
LOAD IMBALANCE SUBROUTINE
720
IS CURRENT NET PRESSURE > 0.65 MAXIMUM LOAD PRESSURE
NO
YES
730
IS |SIDE 1 PRESSURE - SIDE 2 PRESSURE (OPT. RATIO)| > 10% LOAD CAPACITY PRESSURE
NO
YES
750
SIGNAL SIDE/SIDE IMBALANCE
740
IS |FORE PRESSURE - AFT PRESSURE (OPT. RATIO)| > 10% LOAD CAPACITY PRESSURE
NO
YES
760
SIGNAL FORE/AFT IMBALANCE
RETURN TO 608

FIG. 18j

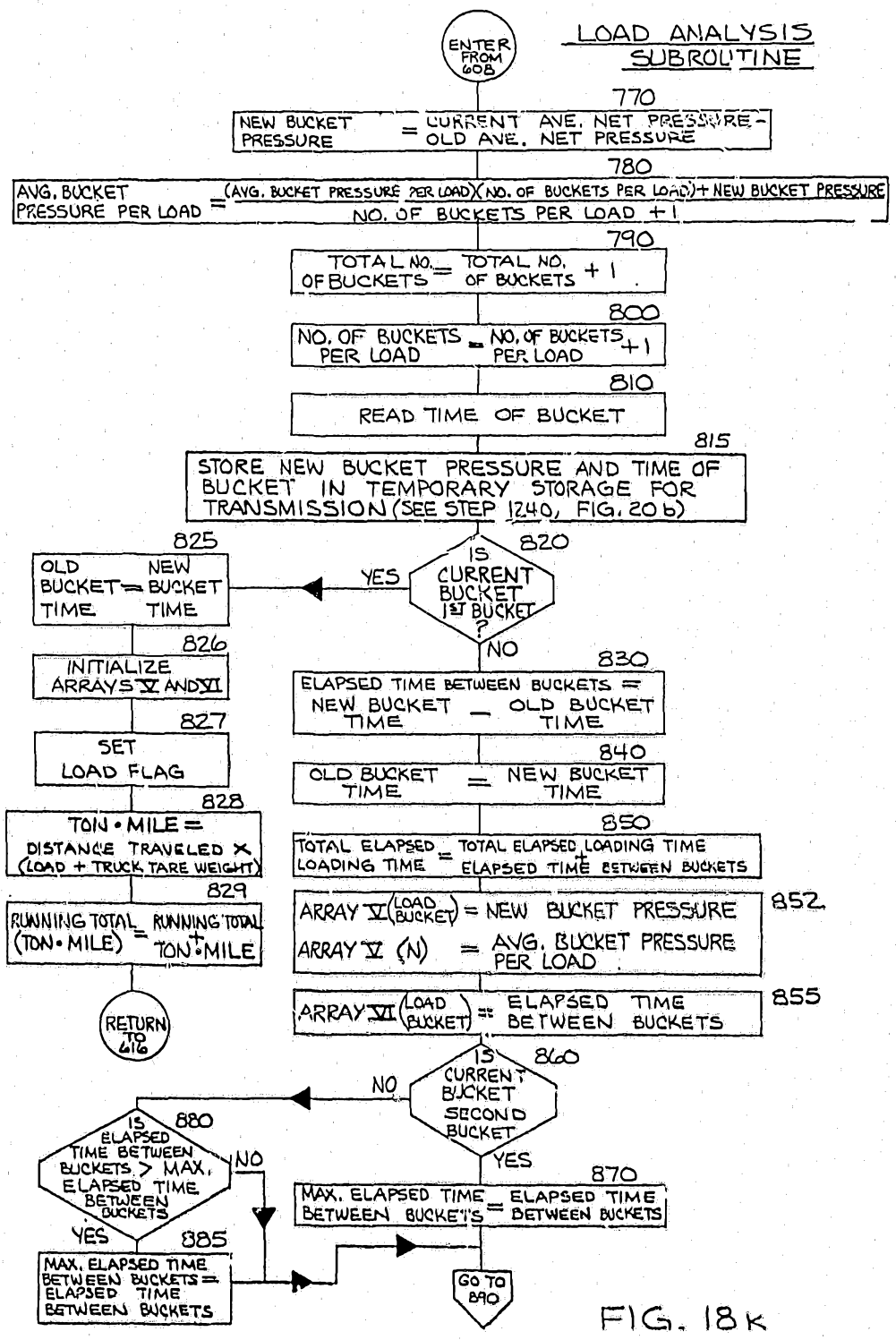
ENTER FROM 608
LOAD ANALYSIS SUBROUTINE
770
NEW BUCKET PRESSURE = CURRENT AVE. NET PRESSURE - OLD AVE. NET PRESSURE
780
AVG. BUCKET PRESSURE PER LOAD = (AVG. BUCKET PRESSURE PER LOAD)(NO. OF BUCKETS PER LOAD) + NEW BUCKET PRESSURE / NO. OF BUCKETS PER LOAD + 1
790
TOTAL NO. OF BUCKETS = TOTAL NO. OF BUCKETS + 1
800
NO. OF BUCKETS PER LOAD = NO. OF BUCKETS PER LOAD + 1
810
READ TIME OF BUCKET
815
STORE NEW BUCKET PRESSURE AND TIME OF BUCKET IN TEMPORARY STORAGE FOR TRANSMISSION (SEE STEP 1240, FIG. 20b)
820
IS CURRENT BUCKET 1ST BUCKET ?
YES
NO
825
OLD BUCKET TIME = NEW BUCKET TIME
826
INITIALIZE ARRAYS V AND VI
827
SET LOAD FLAG
828
TON • MILE = DISTANCE TRAVELED X (LOAD + TRUCK TARE WEIGHT)
829
RUNNING TOTAL (TON • MILE) = RUNNING TOTAL (TON • MILE) + TON • MILE
RETURN TO 616
830
ELAPSED TIME BETWEEN BUCKETS = NEW BUCKET TIME - OLD BUCKET TIME
840
OLD BUCKET TIME = NEW BUCKET TIME
850
TOTAL ELAPSED LOADING TIME = TOTAL ELAPSED LOADING TIME + ELAPSED TIME BETWEEN BUCKETS
852
ARRAY V (LOAD BUCKET) = NEW BUCKET PRESSURE
ARRAY V (N) = AVG. BUCKET PRESSURE PER LOAD
855
ARRAY VI (LOAD BUCKET) = ELAPSED TIME BETWEEN BUCKETS
860
IS CURRENT BUCKET SECOND BUCKET
NO
YES
870
MAX. ELAPSED TIME BETWEEN BUCKETS = ELAPSED TIME BETWEEN BUCKETS
880
IS ELAPSED TIME BETWEEN BUCKETS > MAX. ELAPSED TIME BETWEEN BUCKETS
NO
YES
885
MAX. ELAPSED TIME BETWEEN BUCKETS = ELAPSED TIME BETWEEN BUCKETS
GO TO 890

FIG. 18K

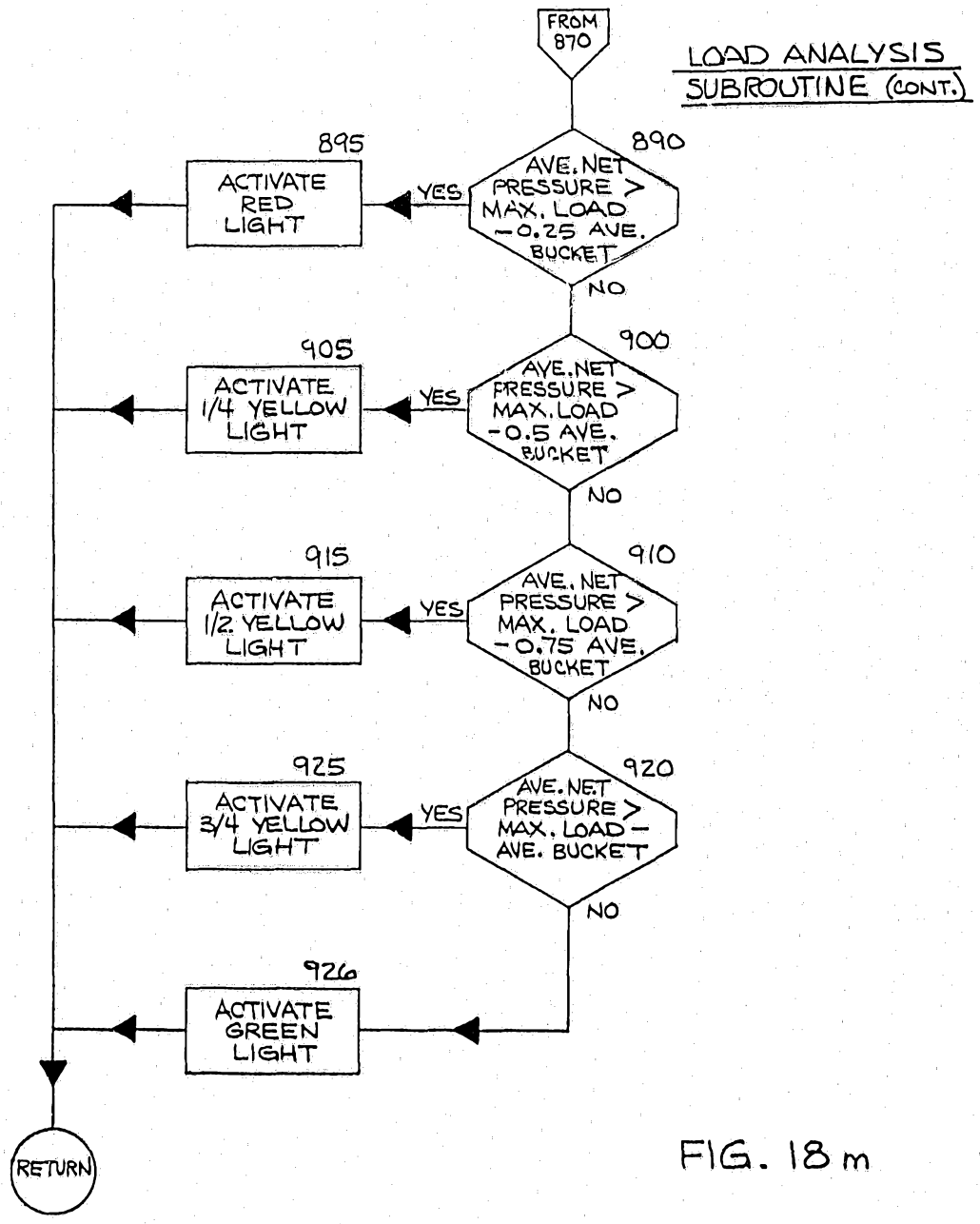
LOAD ANALYSIS SUBROUTINE (CONT.)
FROM 870
890
AVE. NET PRESSURE > MAX. LOAD -0.25 AVE. BUCKET
YES
NO
895
ACTIVATE RED LIGHT
900
AVE. NET PRESSURE > MAX. LOAD -0.5 AVE. BUCKET
YES
NO
905
ACTIVATE 1/4 YELLOW LIGHT
910
AVE. NET PRESSURE > MAX. LOAD -0.75 AVE. BUCKET
YES
NO
915
ACTIVATE 1/2 YELLOW LIGHT
920
AVE. NET PRESSURE > MAX. LOAD - AVE. BUCKET
YES
NO
925
ACTIVATE 3/4 YELLOW LIGHT
926
ACTIVATE GREEN LIGHT
RETURN

FIG. 18m

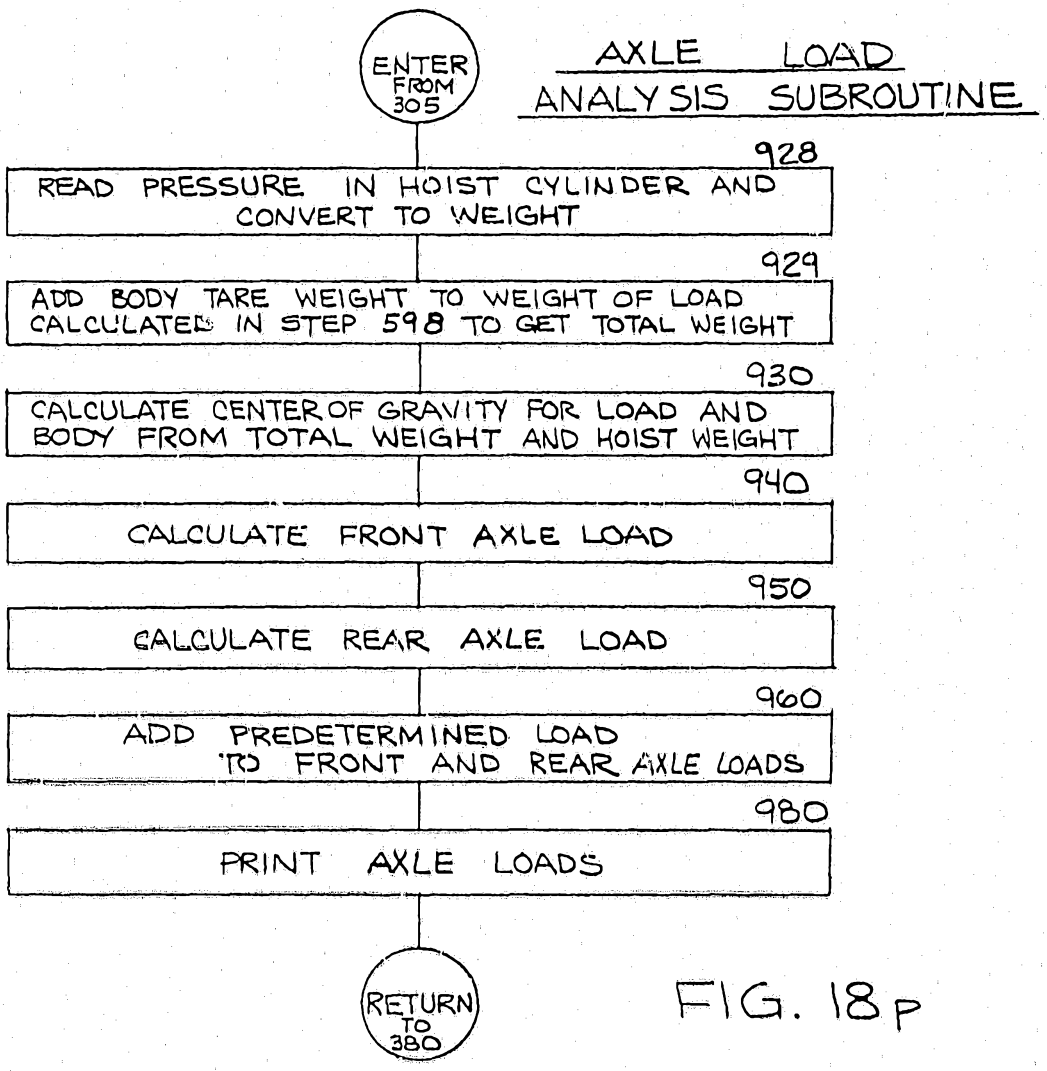
ENTER FROM 305
AXLE LOAD ANALYSIS SUBROUTINE
928
READ PRESSURE IN HOIST CYLINDER AND CONVERT TO WEIGHT
929
ADD BODY TARE WEIGHT TO WEIGHT OF LOAD CALCULATED IN STEP 598 TO GET TOTAL WEIGHT
930
CALCULATE CENTER OF GRAVITY FOR LOAD AND BODY FROM TOTAL WEIGHT AND HOIST WEIGHT
940
CALCULATE FRONT AXLE LOAD
950
CALCULATE REAR AXLE LOAD
960
ADD PREDETERMINED LOAD TO FRONT AND REAR AXLE LOADS
980
PRINT AXLE LOADS
RETURN TO 380

FIG. 18P

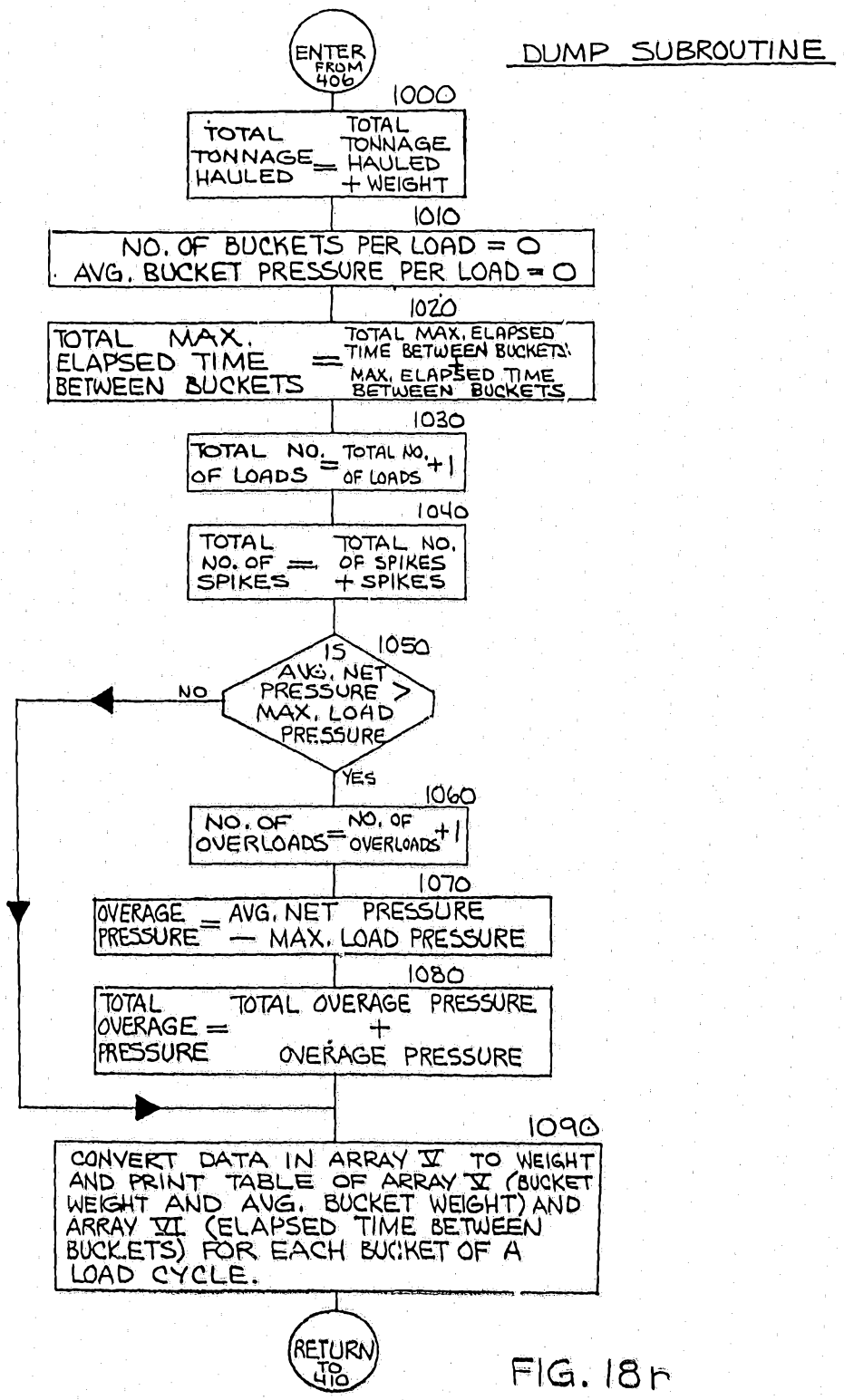
DUMP SUBROUTINE
ENTER FROM 406
1000
TOTAL TONNAGE HAULED = TOTAL TONNAGE HAULED + WEIGHT
1010
NO. OF BUCKETS PER LOAD = 0
AVG. BUCKET PRESSURE PER LOAD = 0
1020
TOTAL MAX. ELAPSED TIME BETWEEN BUCKETS = TOTAL MAX. ELAPSED TIME BETWEEN BUCKETS + MAX. ELAPSED TIME BETWEEN BUCKETS
1030
TOTAL NO. OF LOADS = TOTAL NO. OF LOADS + 1
1040
TOTAL NO. OF SPIKES = TOTAL NO. OF SPIKES + SPIKES
IS AVG. NET PRESSURE > MAX. LOAD PRESSURE
1050
NO
YES
1060
NO. OF OVERLOADS = NO. OF OVERLOADS + 1
1070
OVERAGE PRESSURE = AVG. NET PRESSURE — MAX. LOAD PRESSURE
1080
TOTAL OVERAGE PRESSURE = TOTAL OVERAGE PRESSURE + OVERAGE PRESSURE
1090
CONVERT DATA IN ARRAY V TO WEIGHT AND PRINT TABLE OF ARRAY V (BUCKET WEIGHT AND AVG. BUCKET WEIGHT) AND ARRAY VI (ELAPSED TIME BETWEEN BUCKETS) FOR EACH BUCKET OF A LOAD CYCLE.
RETURN TO 410

FIG. 18r

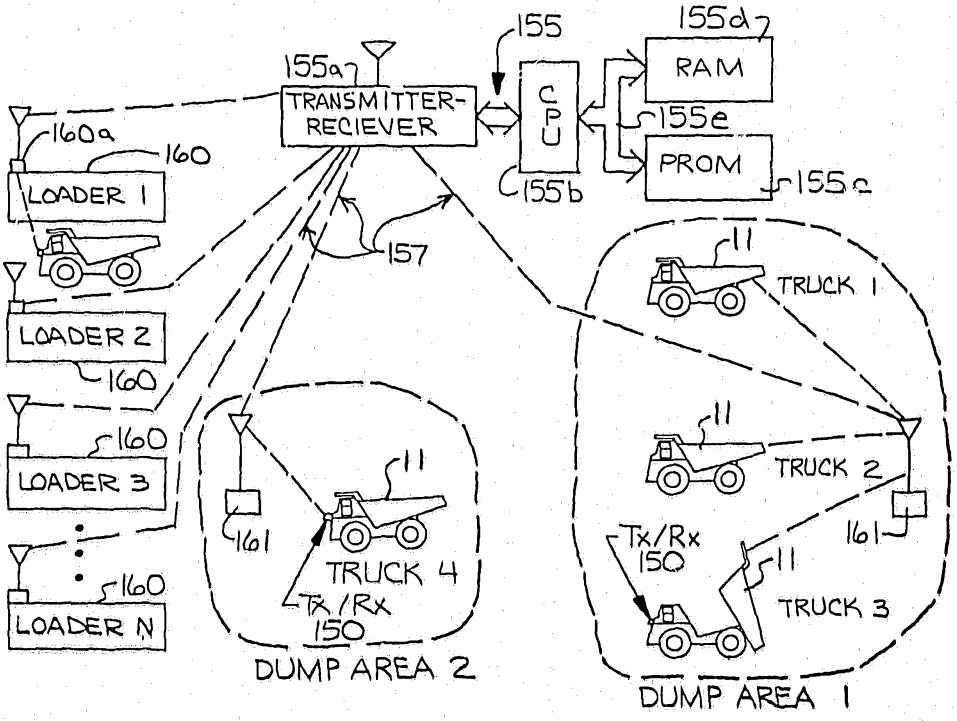

FIG. 19a

SYNC	TRUCK NO.	DUMP OR LOAD

SYNC	TRUCK NO.	LOADER NO.

FIG. 19b

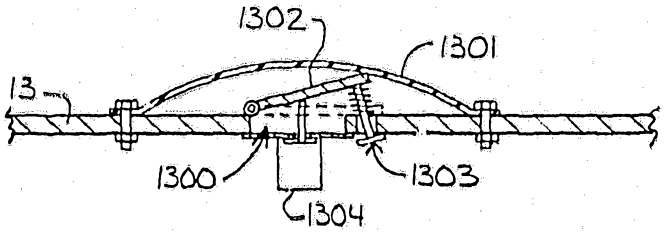

FIG. 19c

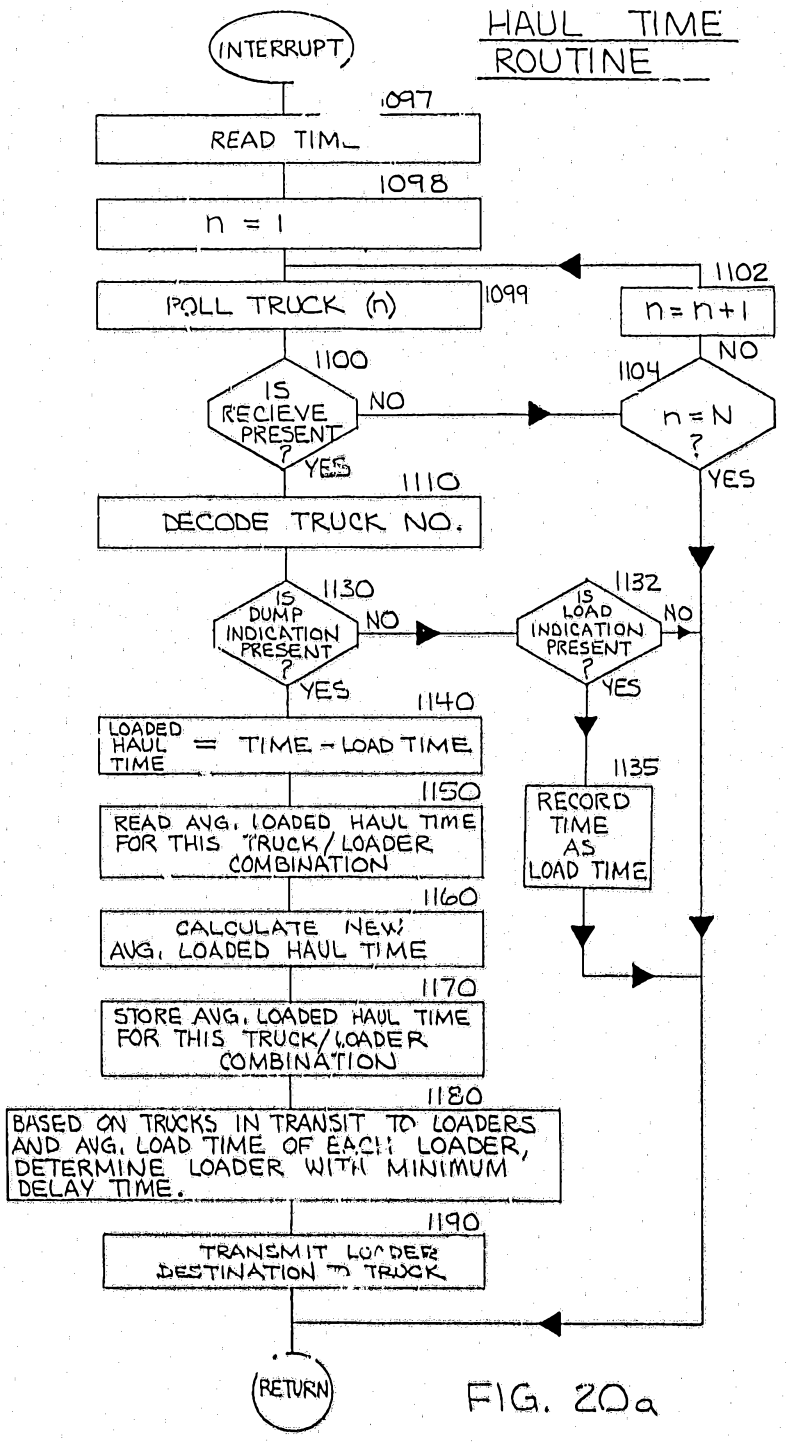
HAUL TIME ROUTINE
INTERRUPT
1097
READ TIME
1098
n = 1
1102
n = n+1
1099
POLL TRUCK (n)
NO
1100
IS RECIEVE PRESENT ?
NO
1104
n = N ?
YES
YES
1110
DECODE TRUCK NO.
1130
IS DUMP INDICATION PRESENT ?
NO
1132
IS LOAD INDICATION PRESENT ?
NO
YES
YES
1140
LOADED HAUL TIME = TIME - LOAD TIME
1135
RECORD TIME AS LOAD TIME
1150
READ AVG. LOADED HAUL TIME FOR THIS TRUCK/LOADER COMBINATION
1160
CALCULATE NEW AVG. LOADED HAUL TIME
1170
STORE AVG. LOADED HAUL TIME FOR THIS TRUCK/LOADER COMBINATION
1180
BASED ON TRUCKS IN TRANSIT TO LOADERS AND AVG. LOAD TIME OF EACH LOADER, DETERMINE LOADER WITH MINIMUM DELAY TIME.
1190
TRANSMIT LOADER DESTINATION TO TRUCK
RETURN

FIG. 20a

DATA DOWNLOAD ROUTINE

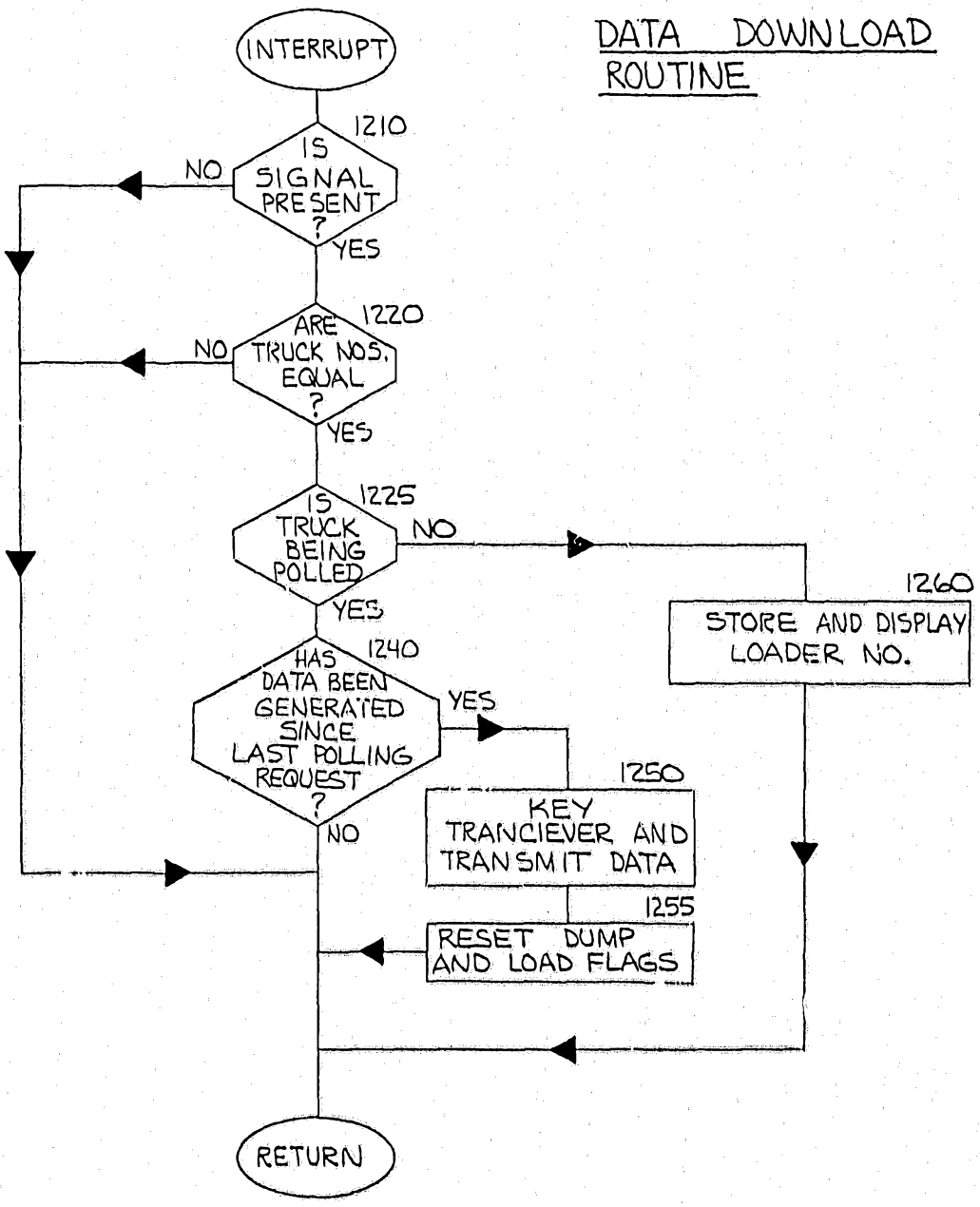

FIG. 20b