No. 634,467. Patented Oct. 10, 1899.

K. S. LEMSTRÖM.

ELECTRICAL INFLUENCE MACHINE.

(Application filed Mar. 4, 1899.)

(No Model.) 2 Sheets—Sheet 1.

Fig. 1.

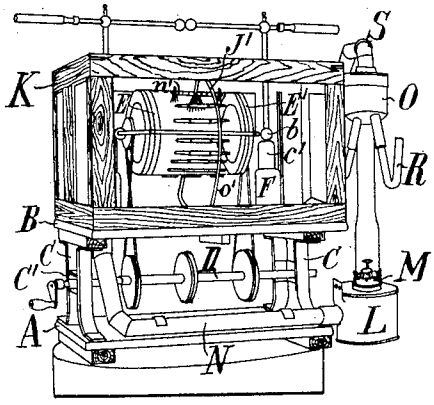

Fig. 2.

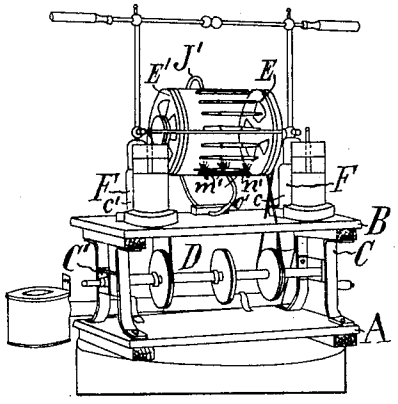

Fig. 4.

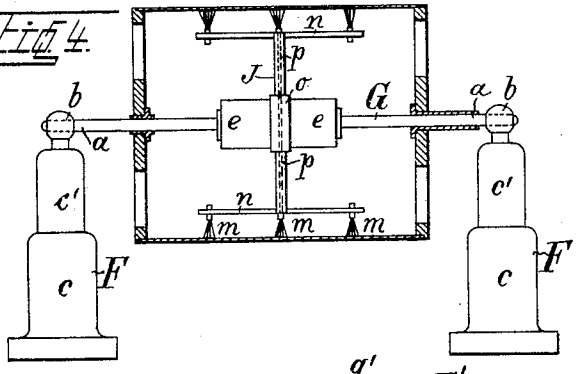

Fig. 3.

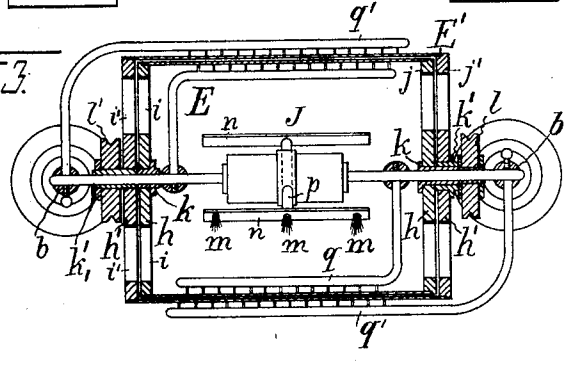

WITNESSES:

Fred Whitz

Thomas F. Wallace

INVENTOR:

Karl Selim Lemström,

By his Attorneys:

Arthur L. Fraser & Co.

THE NORRIS PETERS CO., PHOTO-LITHO., WASHINGTON, D. C.

No. 634,467. Patented Oct. 10, 1899.

K. S. LEMSTRÖM.

ELECTRICAL INFLUENCE MACHINE.

(Application filed Mar. 4, 1899.)

(No Model.) 2 Sheets—Sheet 2.

Fig. 7.

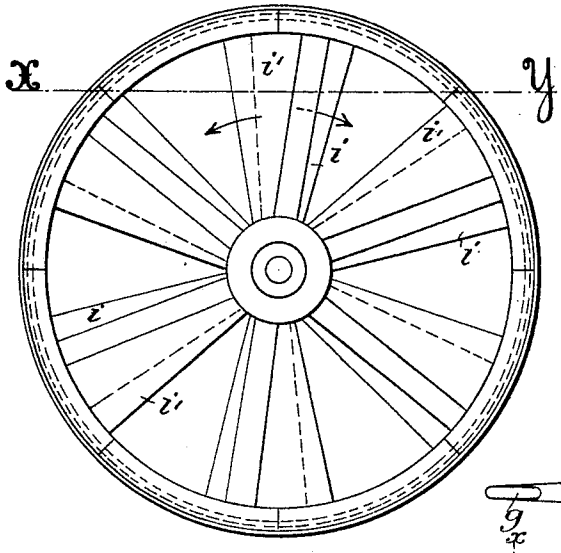

Fig. 8.

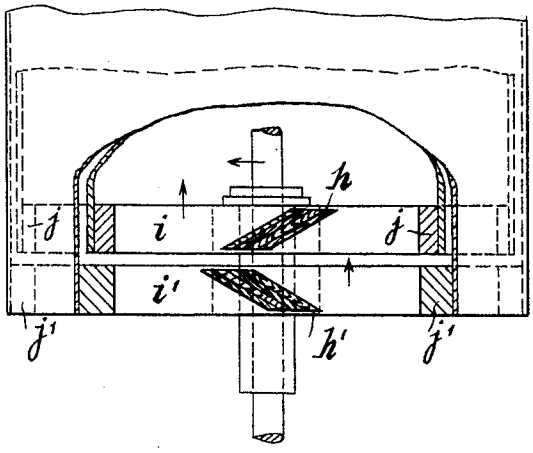

Fig. 5.

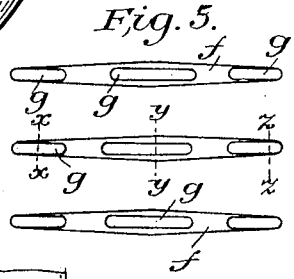

Fig. 6.



Witnesses:
Thomas F. Wallace
Theo. T. Snell

Inventor
Karl Selim Lemström
By his Attorneys
Arthur C. Dresser & Co

THE NORRIS PETERS CO., PHOTO-LITHO., WASHINGTON, D. C.

UNITED STATES PATENT OFFICE.

KARL SELIM LEMSTRÖM, OF HELSINGFORS, FINLAND.

ELECTRICAL INFLUENCE-MACHINE.

SPECIFICATION forming part of Letters Patent No. 634,467, dated October 10, 1899.

Application filed March 4, 1899. Serial No. 707,764. (No model.)

To all whom it may concern:

Be it known that I, KARL SELIM LEMSTRÖM, professor, a subject of Nikolaus II, Emperor of Russia, Grand Duke of Finland, residing at Helsingfors, Finland, have invented certain new and useful Improvements in Electrical Influence-Machines; and I do hereby declare the following to be a full, clear, and exact description of the invention, such as will enable others skilled in the art to which it appertains to make and use the same.

This invention has for its object an improvement in electrical machines of the class in which the effective surfaces are in the form of two cylinders or drums, of glass or other non-conducting material, one of which cylinders is arranged inside the other, while both are so mounted that they may be set in rotation in opposite directions by a common shaft.

This improved influence-machine characterizes itself from similar machines hitherto known in that electricity is taken not only from the outer drum, but also from the inner one. Only in the newest machine of Wimshurst (see *Engineering*, year 1888, Vol. I, page 423) with a vertical axis is electricity collected from both drums by two pairs of combs, which are mounted on a common insulated support at the upper ends of the drums. This arrangement, however, does not allow of the machine being made of large dimensions, because in such an arrangement the insulation cannot be maintained.

The improved machine which forms the object of the present invention may, on the contrary, be made in any suitable size and complete insulation be easily obtained. This is rendered possible by the supporting-spindle on which the two drums are mounted being formed at the ends of metal and carried by insulated metallic supports, while the center part of this supporting-spindle is formed of non-conducting material, which insulates the metallic ends one from the other. These carry each two combs, one of them arranged inside and the other outside the cylinder in such a way that these combs stand opposite one another. The conducting ends of the supporting-spindle and their supports form the poles of the machine from which electricity can be taken.

In the accompanying drawings, Figures 1 and 2 are two views in perspective of the machine, taken from different sides, Fig. 1 showing the machine with the drying apparatus, and Fig. 2 without the same. Fig. 3 is a horizontal section of the machine; Fig. 4, a vertical section of the inner drum; Fig. 5, a view of the metallic attachments or coverings on the drum, and Fig. 6 sections of the said metallic coverings. Fig. 7 shows in an elevation, partly in section, and Fig. 8, in a section along line X Y, Fig. 7, the propeller-like shape of the arms carrying the drum.

As may be seen in Fig. 1, the machine is arranged on a foundation or bed plate B, carried by an under frame, consisting of two metallic supports C, fixed on a common foundation or bed plate A. A shaft D, carrying three belt or cord pulleys, is mounted in the center bars C′ of the said framework C, one of said pulleys serving for driving the machine from a suitable source of power, while the other two pulleys set in rotation the drums E and E′, arranged above the said shaft and above the plate B. A handle or hand-crank provided on this shaft may be utilized for operating the machine by hand.

Two posts F, which carry the fixed supporting-spindle G of the two drums E and E′, are arranged on the plate B near its ends. The lower part *c* of these posts consists of wood, and the upper part of a strong ebonite cylinder *c′* of at least five centimeters in height. These cylinders carry metallic balls *b*, which are perforated and receive the ends *a* of the carrying-spindle G without allowing the same to rotate. The ends *a* of this spindle G are formed of metal—for instance, steel. The center part is formed of a thick cylindrical piece of ebonite *e*. The larger of the hollow drums or cylinders E E′ gives the measure for all the other parts of the apparatus and for its capabilities of delivery or effectiveness. The drums are made of glass or other suitable insulating material and so arranged that the edges of the outer drum E′ project at least one and one-half centimeters beyond those of the inner drum E. Between the inner surface of the outer cylinder and the outer surface of the inner cylinder there is an interstice of one-fourth millimeter. The drums are preferably coated with metal pieces *f*, Figs. 5 and 6, consisting of strips about five

millimeters in width of thin tin-foil or plates on which three semicylindrical metal pieces g, provided with rounded ends which may be formed of tin sheets of about one millimeter in thickness, are fixed. These metal strips are preferably cemented on the outer surface of the outer drum and on the inner surface of the inner drum parallel with the axis of the drums, while the distance of the ends of the strips from the ends of the drums is four-fifths of a millimeter, and the distance of these metal strips from one another may be selected according to the size of the drums. The cylindrical drums are carried on ends or bottom pieces. These may be formed of a perforated ebonite disk, but in large machines of a central ebonite disk $h\,h'$ of at least six centimeters in size, carrying radial arms $i\,i'$, formed of several layers of walnut or mahogany wood glued one upon the other and having their grain crossing, and which terminate in curved pieces or segments $j\,j'$, formed of ebonite, which rest against the cylinder. The arms $i\,i'$ in this bottom or end are in an oblique direction or sloping to the axis similar to screw-propellers or ventilators, Figs. 7 and 8, the obliquity of the arms of the two cylinders being in opposite directions, as represented in Fig. 8, so that they draw in air on one side and expel it on the other side. This draft of air causes the air in the machine to be constantly changed, and therefore a condition in which the air is charged sufficiently to endanger the insulation cannot arise, while at the same time any deposition of moisture in the machine is prevented and any moisture deposited in the machine when it is stationary is removed. In the Wimshurst machine the drums have the ends closed below, but no ends at the top, so that the change of the air contained in the drum can only take place very slowly. In the center of the ebonite naves h of the inner drum E suitable bearing-bushes $k\,k'$ are inserted to bear on the fixed spindle G, while in the naves h' of the outer drum similar bearing-bushes $k'\,k'$ are inserted, one of which k' is suitably fitted over the socket k, while the other socket k' is directly mounted on the pin or journal a of the carrying-spindle G. A belt or cord pulley l is firmly connected with the socket k, and a belt or cord pulley l' with the socket k'. These pulleys may be set in rotation by means of a cord or belt from the cord or belt pulleys on the driving-shaft D. One of the cords is crossed, the other straight, so that on the shaft G being rotated the two drums are set in rotation in opposite directions.

In contrast to the machines hitherto known no weight is attached by me to the inner drum being air-tightly inclosed by the outer one.

Each hollow drum is provided with a transverse conductor J J', the inner one being preferably set at about ninety degrees to the outer one. The outer one, J', is shown in Figs. 1 and 2; the inner one, J, in Figs. 3 and 4. These transverse conductors carry at each end at least three brushes m and m' of fine copper wires, such as are employed for embroideries. These brushes encounter the thickened part g of the metal coverings f of the drums and are mounted in cross-bars n and n' of metal. In the outer transverse conductor J' these cross-bars n' are carried by a curved metal piece o'. In the inner cylinder this curved metal piece is replaced by a cross-piece o, of ebonite, traversed by a thick metal wire p, which is mounted on the ebonite pieces e of the fixed spindle G.

The arrangement for collecting the electricity consists of two parts of metallic collecting-combs $q\,q'$, each of which is carried by one of the metallic ends a of the spindle G. Of the two collecting-combs of each pair one is arranged outside and one inside the drums, and both are opposite one another. The length of these collecting-combs corresponds, preferably, to that of the metal coverings of the drums. The ends of the collecting-combs $q\,q'$ must thus also remain about four centimeters distant from the ends of the drums. The discharging-rods are also ordinary ones, and, as shown in Fig. 1, are connected with the posts of the carrying-spindle, the ends of which form the poles of the machine.

The machine is surrounded externally by a case K, partly formed of glass, which fits closely to the upper frame and has a lid which may be shut, so that air is excluded from the case. In order to keep the air in the case dry, it is connected with a small air-drying apparatus. This consists of a sheet-metal container L, in which a petroleum-lamp M may be inserted, which lamp is so arranged that when burning it draws the necessary air out of the container L. The latter is connected by means of a sheet-metal pipe N with the under part of the case K. Above the draft-glass of the lamp there is mounted a second container O, formed of sheet-copper, which is provided with two divergent tubular projections R, in which upwardly-bent glass tubes filled with phosphoric anhydrid or any suitable hygroscopic material are inserted. This copper container is connected by means of a pipe S with the case K. When the petroleum-lamp burns, air is drawn out of the case, and as the copper container is simultaneously warmed dried air penetrates into the case.

When the machine is to be set in operation, the drying apparatus is started first by lighting the petroleum-lamp, whereby the air in the case K is dried. It is sufficient then to set the shaft D in rotation by hand or by means of mechanical power. The excitement takes place automatically in consequence of the use of the covering-strips and cross-conductor brushes, the latter producing some frictional electricity which is sufficient to initiate the influence action. The electricity developed in the ordinary way may be collected from the poles of the machine in any suitable manner.

By this machine a considerably-greater

quantity of electricity is delivered per revolution than with the influence-machines of Holz and Wimshurst, and also than that of Glaser. For these results the drying of the air contained in the machine and the current of air produced by the propeller-shaft ends of the machine are very essential.

Having now particularly described my invention, what I claim, and desire to secure by Letters Patent, is—

1. In an electrical influence-machine the combination with two drums one arranged in the other, and means for revolving these drums in opposite directions of a fixed insulated spindle formed of two metal pins or journals insulated one from the other by an intermediate block of insulating material and two pairs of metallic combs, each pair supported by one of the metallic ends of the said spindle, substantially as described.

2. In an electrical influence-machine two metal pins or journals connected by an intermediate insulating-block to form a spindle, two insulated metallic balls supporting the ends of said spindle, an inner drum revolubly supported by said spindle, an outer drum surrounding the other, and two pairs of metallic combs, each pair being supported by one of the metallic ends of the spindle and one comb of each pair being arranged in the inner drum opposite the other comb of the same pair, substantially as described.

3. In an electrical influence-machine an outer and an inner drum, the two being revoluble in opposite directions a fixed insulated spindle composed of two metallic pins or journals and an intermediate insulating-block, an inner transverse conductor, supported by this block and an insulated outer transverse conductor, metal-wire brushes on the ends of the two transverse conductors, substantially as described.

4. In an electrical influence-machine two revoluble drums, one arranged in the other, metallic pieces or coverings both on the inner surface of the inner drum and on the outer surface of the outer drum and two pairs of combs each pair being supported by one metallic end of a fixed insulated spindle supporting the two drums, one comb of each pair being arranged inside the inner and one outside the outer drum.

5. In an electrical influence-machine a fixed insulated spindle, two drums, two pairs of perforated end plates on this spindle each pair supporting the cylindrical body of one of the drums, metallic pieces or coverings on the outer surface of the outer drum and on the inner surface of the inner drum, two pulleys on the said spindle each connected to one of the perforated end plates of each of the drums and means for rotating the two pulleys with the two drums in opposite directions.

6. In an electrical influence-machine two hollow insulating-cylinders, a fixed insulated spindle, two pairs of naves rotatably arranged upon the spindle, arms on these naves arranged in an oblique direction or sloping to the axis to form air-propellers, segments on the ends of these arms supporting the two hollow cylinders of the drums, substantially as described.

7. In combination with an electrical influence-machine such as described a case covering the machine, a sheet-metal container connected by means of a pipe with the case and having a petroleum-lamp which draws its air for combustion out of the said case, a second container connected to the upper part of the case by a pipe and being arranged above the draft-glass of the said lamp and upwardly-bent pipes connected to the second container and filled with hygroscopic material, substantially as described.

In testimony whereof I affix my signature in presence of two witnesses.

KARL SELIM LEMSTRÖM.

Witnesses:

FRIEDR. KOLSTED,

OTTO LIND.