Oct. 29, 1940. O. C. RITZ-WOLLER 2,219,940

LAMP

Filed May 18, 1939

Fig. 2

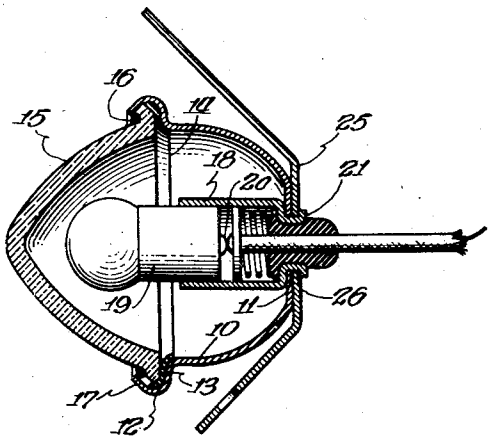

Fig. 1

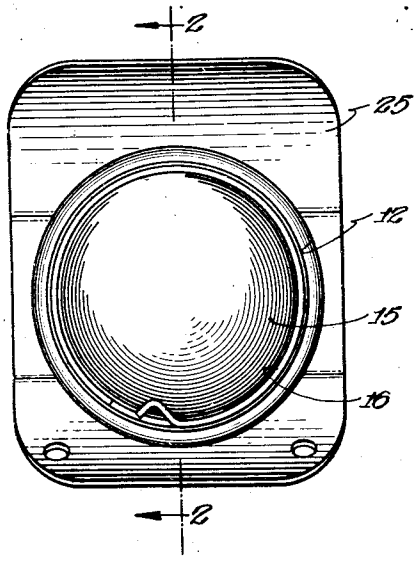

Fig. 3

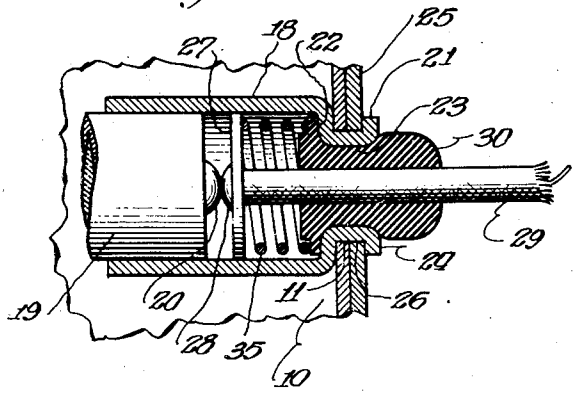

Fig. 4

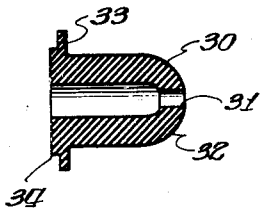

Inventor:
Oliver C. Ritz-Woller
By Leslie W. Frick
Attorney.

Patented Oct. 29, 1940 2,219,940

UNITED STATES PATENT OFFICE

2,219,940

LAMP

Oliver C. Ritz-Woller, Chicago, Ill.

Application May 18, 1939, Serial No. 274,311

1 Claim. (Cl. 173—339)

My invention relates to lamps for automotive vehicles, such as trucks and trailers, and it relates in particular to lamps of the type commonly known as clearance lamps. It has for its object the provision of a new and improved form and arrangement of parts in such lamps whereby the lamps will be more satisfactory in service and may be more economically manufactured than prior known lamps.

My invention contemplates a lamp comprising an electric light bulb and a socket enclosed by a housing member and a lens, with a lead-in wire extending through an aperture in the housing member to the socket, and it is an object of my invention to provide an arrangement for such a lamp whereby the lead-in wire is well insulated from the housing member and the other surrounding parts.

It is also an object of my invention to provide an arrangement of this type by means of which substantially no moisture or dirt is permitted to enter the lamp housing through the aperture in the housing member for the lead-in wire by reason of the shape and fit of the parts in the aperture.

It is a further object of my invention to provide an arrangement of this type which is so assembled that the parts thereof remain substantially in the same relative positions to each other regardless of the vibration to which the lamp is subjected and regardless of the number of times a lamp bulb is replaced by another.

The invention consists in the novel constructions, arrangements and devices to be hereinafter described and claimed for carrying out the above stated objects and such other objects as will appear from the following specification taken in connection with the accompanying drawing illustrating a certain preferred embodiment, wherein—

Fig. 1 is a front face view of a clearance lamp embodying the principles of my invention;

Fig. 2 is a central vertical section through the lamp on the line 2—2 of Fig. 1;

Fig. 3 is a view similar to Fig. 2 but on a larger scale and with certain of the parts broken away; and

Fig. 4 is a sectional view of the elastic sleeve used in my improved lamp in its unexpanded and uncompressed condition.

Referring now to the drawing, in which corresponding parts are indicated by the same reference characters, my invention comprises, as is best shown in Fig. 2, a housing member 10 of dish-like form having in its central region an aperture 11. The rim 12 of the housing member is in the form of a channel providing on its inner side a seat 13 on which is positioned an annular gasket 14 of rubber or the like. A dish-shaped lens 15 which is preferably of glass, either clear or colored, is held in position on the gasket by means of a spring retainer ring 16 which fits between the lens and the flange 17 of the channel-shaped rim 12. The retainer ring in its unconfirmed condition is of greater diameter than when it is in position in an assembled lamp and thus it holds the lens 15 tightly against the gasket 14.

Inside the enclosure formed by the lens 15 and the housing member 10 is a tubular socket 18 in which is positioned an electric lamp bulb 19 having on its base a central contact 20. The lamp is held in the socket by any suitable means. The socket is provided on its opposite end with a channel or grommet portion 21 comprising flanges 22, 23 and 24. The flange 23 passes through the aperture 11 of the housing member 10 as shown. A mounting bracket 25 which is provided with an aperture 26 is positioned adjacent the housing member 10, and the flange 23 also passes through the aperture 26. The socket 18, the housing member 10, and the bracket 25 are held fixed relative to each other by the grommet portion 21, the flange 24 fitting tightly against the bracket 25 and the flange 22 fitting tightly against the housing member 10.

Within the socket is a contact member 27 of insulating material in the form of a disc which is adapted to slide within the socket. The contact member 27 carries a contact 28 which is adapted to make connection with the contact 20. The contact 28 is electrically connected to a wire 29 which passes through the grommet portion 21.

In the grommet portion 21 is positioned a sleeve 30 of insulating material such as flexible rubber. In its unexpanded and uncompressed condition the sleeve 30, as shown in Fig. 4, is of smaller internal diameter especially at its outer end 31 than the external diameter of the wire 29. The outside surface of the sleeve is preferably rounded at its outer end as at 32. The sleeve is provided on its inner end with a flange 33 and a boss 34. When the sleeve is in an assembled lamp, as shown in Fig. 3, it tightly surrounds the wire 29 particularly at its outer end 31, and it is tightly compressed within the grommet portion 21. Between the contact member 27 and the flange 33 and fitting over the boss 34 is a spring 35. The spring acts to push the contact 28 tightly against the contact 20 and also to hold

the sleeve 30 in position in the grommet portion 21 with the flange 33 bearing against the flange 22.

When the contact member 27 is moved within the socket 18 in adjusting or replacing the bulb 19, the wire 29 may be forced through the sleeve 30 a corresponding distance. Due to the tightness of the fit between the sleeve and the wire and the tightness of the fit between the sleeve and the grommet portion 21, and particularly between the flexible rubber flange 33 and the metal flange 22, dust or moisture is effectively prevented from entering the socket either through or around the sleeve. The flanges 22, 23 and 24 also fit tightly against or around the adjacent parts of the housing and bracket and substantially no dirt or moisture is permitted to enter the housing member around the external surface of the grommet portion.

Lamps embodying my improved arrangement may be quickly and easily assembled. In order to fix the socket 18, the housing member 10 and the bracket 25 together, it is simply necessary to fit the grommet through the apertures 11 and 26 and then turn over the flange 24 against the rear face of the bracket. The sleeve 30 is easily expanded and forced along on the wire 29. When the spring 35 and the sleeve have been positioned on the wire it is simply necessary to thread the wire and sleeve through the grommet portion 21 in order to put these parts in correct assembled positions. Due to the sleeve being rounded at 32, it is easily forced into the grommet portion into its compressed position as shown in Fig. 3.

The lead-in wire in my improved lamp is effectively insulated from the socket, the housing member and the bracket by means of the insulating sleeve 30. The metal parts in the lamp are rigidly fixed to each other and cannot be jarred loose from each other. The rubber sleeve is held against movement outwardly by its flange 33 bearing against the flange 22 and is held against inward movement by the spring 35 bearing against the flange 33. My improved construction is very simple, and it comprises a minimum number of parts. The lamp as a unit may be manufactured in production at a minimum of expense, and under service conditions the lamp has proved to be very satisfactory.

I do not intend to limit my invention to the details of construction shown and described except only in so far as the appended claim is specifically so limited as it will be obvious that modifications may be made without departing from the principles of the invention.

I claim:

In a lamp of the type described, the combination of a tubular lamp socket having on one of its ends an inwardly extending annular flange and on its other end means for holding the base of a lamp bulb, a contact member in said socket for bearing against a lamp base therein, a lead-in wire extending through said flange and connected to said contact member, a sleeve of flexible insulating material surrounding said wire and compressed within said flange, said sleeve at its inner end having a flexible flange and a boss, said flexible flange being disposed against said first named flange, and a coiled wire spring between said contact member and said flexible flange and surrounding said boss, said spring firmly holding said contact member against the lamp bulb when the latter is in said socket and holding said flexible flange tightly against said first named flange thereby providing a weather-tight seal therebetween, said sleeve having a reduced internal diameter at its outer end and tightly fitting about said wire to provide a weather-tight seal between the sleeve and the wire.

OLIVER C. RITZ-WOLLER.