Office de la Propriété Intellectuelle du Canada
Un organisme d'Industrie Canada

Canadian Intellectual Property Office
An agency of Industry Canada

CA 2118338 C 2001/08/07

(11)(21) 2 118 338

(12) BREVET CANADIEN
CANADIAN PATENT

(13) C

(22) Date de dépôt/Filing Date: 1994/10/18

(41) Mise à la disp. pub./Open to Public Insp.: 1995/04/20

(45) Date de délivrance/Issue Date: 2001/08/07

(30) Priorité/Priority: 1993/10/19 (5-261286) JP

(51) Cl.Int.^{5}/Int.Cl.^{5} G11B 7/00

(72) Inventeurs/Inventors:
Fujihira, Masamichi, JP;
Muramatsu, Hiroshi, JP;
Chiba, Norio, JP;
Ataka, Tatsuaki, JP

(73) Propriétaire/Owner:
SEIKO INSTRUMENTS INC., JP

(74) Agent: BORDEN LADNER GERVAIS LLP

(54) Titre : SUPPORT DE MEMOIRE OPTIQUE ET APPAREIL D'ENREGISTREMENT-LECTURE UTILISANT CE SUPPORT

(54) Title: OPTICAL MEMORY MEDIUM AND WRITE AND READ APPARATUS USING THE SAME

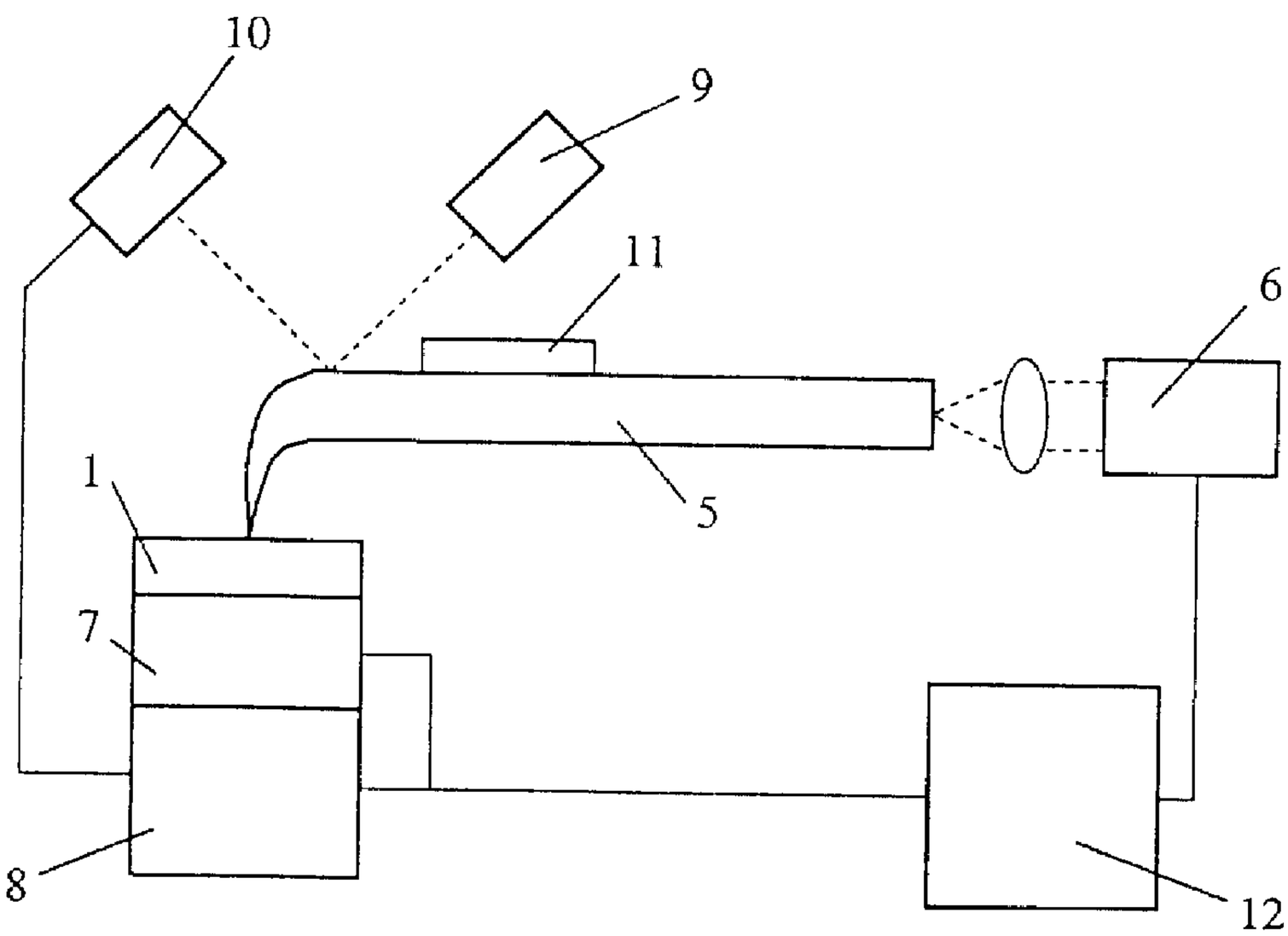

(57) Abrégé/Abstract:
There is disclosed an optical memory medium comprising a flat plate coated with a thin film of a photolytic residual group. Also disclosed is an optical recording apparatus comprising an optical probe having a microscopic aperture on a probe end thereof, a light source, X-Y-Z position control means, and a controller for controlling the apparatus as a whole. Further disclosed is an apparatus for reading the optical memory medium comprising a friction detecting probe, an X- Y-Z position control means and a controller for controlling the apparatus as a whole. Information may also be written and read at high densities less than the wavelength of light using an apparatus for writing to and reading from an optical memory piezoelectric medium comprising a piezoelectric element coated with a thin film of a photolytic residual group, an optical probe having a microscopic aperture on the probe end thereof, a light source, an X-Y-Z position controller and a sensor for measuring the resonance characteristics of the piezoelectric element and a controller for controlling the apparatus as a whole.

ABSTRACT OF THE DISCLOSURE

There is disclosed an optical memory medium comprising a flat plate coated with a thin film of a photolytic residual group. Also disclosed is an optical recording apparatus comprising an optical probe having a microscopic aperture on a probe end thereof, a light source, X-Y-Z position control means, and a controller for controlling the apparatus as a whole. Further disclosed is an apparatus for reading the optical memory medium comprising a friction detecting probe, an X-Y-Z position control means and a controller for controlling the apparatus as a whole. Information may also be written and read at high densities less than the wavelength of light using an apparatus for writing to and reading from an optical memory piezoelectric medium comprising a piezoelectric element coated with a thin film of a photolytic residual group, an optical probe having a microscopic aperture on the probe end thereof, a light source, an X-Y-Z position controller and a sensor for measuring the resonance characteristics of the piezoelectric element and a controller for controlling the apparatus as a whole.

OPTICAL MEMORY MEDIUM AND WRITE AND READ APPARATUSES USING THE SAME

BACKGROUND OF THE INVENTION

The present invention relates to an optical memory medium wherein high density recording is performed on the surface of a substrate through optically produced chemical changes on the surface of the substrate, an optical recording apparatus having a microscopic aperture for performing optical recording at high densities, and an apparatus for reading information by detecting changes in the frictional force on the surface of the memory medium.

Conventional high density memory media include magnetic disks, optical disks, magneto-optical disks and the like. A magnetic disk is a flat plate to which a magnetic substance is applied and it is written and read by a magnetic head. Since a magnetic disk is magnetized in a horizontal direction, it is necessary to prevent magnetic fields from overlapping each other, which has imposed a certain limit on efforts to obtain higher density. Optical disks and magneto-optical disks were developed in an attempt to permit recording at higher densities. In the case of an optical disk, a raw disk is made by means of exposure to laser beams; a master disk is made by means of electroforming from the raw disk; and a replica disk is made by means of injection molding from the master disk. Reading is performed by detecting variations in the reflectance of a laser beam which is affected by each bit. A magneto-optical disk is obtained by forming a thin film of a vertically magnetized material on a flat plate formed with pits for tracks. To write on a magneto-optical disk, vertically magnetized spots are created in the thin film by applying magnetic fields thereto in a vertical direction, while heating the spots above the Curie-point through irradiation by laser beams. Reading is performed by directing laser beams at the thin film and detecting changes in the polarization angle of the reflected laser beams, which depend on the direction of the magnetization of the spots.

Laser beams are used to read bits in both optical disks and magneto-optical disks which are each high density optical memory media. The bit size is limited by the diameter of a spot to which a laser beam is converged and the minimum size is on the order of the wavelength of light, i.e., 1 μm.

SUMMARY OF THE INVENTION

It is an object of the present invention to provide a memory medium wherein the size of a memory bit is smaller than the wavelength of light and an apparatus for writing to and reading from the memory medium.

In order to achieve the above-described object, according to the present invention, there is provided an optical memory medium comprising a flat substrate having a surface modified with a photolytic residual group. As an apparatus for optical writing on this optical memory medium, there is provided an apparatus comprising the optical memory medium, an optical probe having a microscopic aperture at a leading end, a light source, an X-Y-Z position control means and a controller. Further, as a read apparatus, there is provided an apparatus comprising the optical memory medium, a friction detecting probe, and an X-Y-Z position control means and a controller.

In order to facilitate the detection of a frictional force, there is provided an optical memory piezoelectric medium comprising a piezoelectric substrate with a surface modified by a photolytic residual group. As an apparatus for writing to and reading from this optical memory piezoelectric medium, there is provided an apparatus comprising the optical memory piezoelectric medium, an optical probe having a microscopic aperture at a leading end, a light source, an X-Y-Z position control means, a means for measuring the resonance characteristics of the piezoelectric element and a controller.

The optically reactive functional group can be applied at a high density on the surface of the optical memory medium which comprises a flat plate coated with a photolytic functional group. Therefore, the medium will have a unit memory area on the order of a molecule, i.e. a memory density equal to or less than 1 nm.

Among optically reactive functional groups, photolytic functional groups can be desorbed by irradiating the optical beam with a predetermined wavelength and therefore permits optical writing. Unlike conventional irradiation using optical beams, using an optical probe having a microscopic aperture, the area of irradiation can be focused to approximately 20 nm diameter, which permits a higher density recording.

The friction coefficient of the surface of the substrate varies depending on whether there is an optically reactive functional group on the surface or not. It is therefore possible to read the information stored thereon by monitoring variations in the frictional coefficient of the surface. The frictional variations can be detected by monitoring the angle at which a cantilever for an atomic force microscope is twisted by the friction at the surface.

When changes in the resonance characteristics of the piezoelectric plate are used as a means for detecting the frictional force, an optical memory medium obtained by modifying a piezoelectric plate in a shear vibration mode with a photolytic functional group is used. If the probe is brought into contact with the shear-vibrating piezoelectric plate, there will be a change in the resonance characteristics of the piezoelectric element. Since this change in characteristics depends on the friction coefficient of the surface, the information recorded thereon can be read by monitoring changes in the resonance characteristics of the piezoelectric element.

BRIEF DESCRIPTION OF THE DRAWINGS

Fig. 1A is a schematic view of an optical memory medium according to the present invention;

Fig. 1B illustrates a chemical formula for an example of a modifiable chemical substance according to the present invention;

Fig. 2 is a schematic view of an optical recording apparatus according to the present invention;

Fig. 3 is a schematic view of an optical write apparatus according to the present invention;

Fig. 4 is a schematic view of an optical memory piezoelectric medium according to the present invention; and

Fig. 5 is a schematic view of an apparatus for writing to and reading from an optical memory piezoelectric medium according to the present invention.

DETAILED DESCRIPTION OF THE PREFERRED EMBODIMENTS

An embodiment of the present invention will now be described with reference to the drawings.

(The Configuration of the Optical Memory Medium)

Fig. 1A is a schematic view of an optical memory medium 1 according to the present invention. In Fig. 1A, the optical memory medium 1 comprises a silicon substrate 2 and a film 3 of modifiable chemical on the surface thereof. As the modifiable chemical substance, 4-(chloromethyl) phenyl trimethoxy silane (CMPTS) 4 as shown in Fig. 1B is used. The modifiable chemical film 3 is made by dipping a 10 mm square silicon substrate 2, which had been cleaned in advance, into a 1% toluene solution of CMPTS at room temperature for 30 minutes.

(The Configuration of the Optical Recording Apparatus)

Fig. 2 is a schematic view of an optical recording apparatus according to the present invention. In Fig. 2, an optical fiber sharpened at a probe end thereof by means of laser beam heating and bent in the form of "L" is used as an optical probe 5 having a microscopic aperture. The optical probe 5 is treated to be reflective by applying a metallic film to the surface of the optical probe 5, except for the probe end of a core portion of the fiber. The probe end of the optical probe 5 is disposed proximate to the surface of the optical memory medium 1, and the other end of the probe 5 is connected to a mercury lamp 6 so that light is introduced to the optical probe 5 through a lens system. An X-Y-Z control mechanism controls the position of the optical probe 5 on the surface of the optical memory medium 1 and for controlling the distance between the probe end of the optical probe 5 and the optical memory medium 1. The X-Y-Z control means comprises an X-Y-Z fine adjustment mechanism 7 which includes a piezoelectric element, a coarse adjustment mechanism 8 which includes a stepper motor, a laser 9 and a two-piece photodiode 10 serving as an optical lever used for controlling the distance between the optical probe 5 and the optical memory medium 1.

A reflector for the optical lever is provided on a back surface above the probe end of the optical probe 5 for allowing distance control by detecting the

deflection of the optical probe 5. As another option, a bimorph 11 may be connected to the frame where the optical fiber 5 is connected to perform distance control utilizing changes in the amplitude of vibrations caused in the vicinity of the resonance frequency by applying an AC voltage to the bimorph 11. Optical writing is performed with the light from the mercury lamp 6 turned on and off using a mechanical chopper to allow the writing of bit patterns of 20 nm in size. All of these operations are controlled by a computer 12 for controlling the apparatus as a whole.

(The Configuration of the Optical Read Apparatus)

Fig. 3 is a schematic view of an optical read apparatus according to the present invention. In Fig. 3, a cantilever made of silicon nitride having a microscopic projection at a leading end thereof is used as a friction detecting probe 13, the projection at the leading end of the friction detection probe 13 being positioned proximate to the surface of the optical memory medium 1. Like the recording apparatus, an X-Y-Z control mechanism is provided for controlling the position of the friction detecting probe 13 on the surface of the optical memory medium 1 and for controlling the distance between the leading end of the friction detecting probe 13 and the optical medium 1. The X-Y-Z control means comprises an X-Y-Z fine adjustment mechanism 7 which includes a piezoelectric element, a coarse adjustment mechanism 8 which includes a stepper motor, a laser 9 and a four-piece photodiode 14 serving as an optical lever used for controlling the distance between the friction detecting probe 13 and the optical memory medium 1.

A reflector for the optical lever is provided on a back surface above the leading end of the friction detecting probe 13, which permits distance control and the detection of torsion simultaneously by detecting the deflection of the friction detecting probe 13 and by detecting the torsion of the friction detecting probe 13 caused when the friction detecting probe 13 is scanned. These operations are all controlled by the computer 12 for controlling the apparatus as a whole. With this read apparatus, it is possible to clearly read the bits written through optical writing by means of the friction detecting probe 13. Although the bits could be read by controlling the distance of the friction detecting probe 13 in the Z-direction, the

method described above for reading the memory bits by friction detection is much more sensitive and therefore preferable.

(The Configuration of the Optical Recording Piezoelectric Medium)

Fig. 4 is a schematic view of an optical recording piezoelectric medium 15 according to the present invention. The optical recording piezoelectric medium in Fig. 4 is an AT cut quartz plate 16 which is a piezoelectric element causing shear vibration. Electrodes 17 are formed by sputtering both sides of the AT cut quartz plate 16 using titanium as a backing layer and platinum. A film 3 which is a modifiable chemical on the surface of the AT cut quartz plate 16 similar to that shown in Fig. 1A is provided on the surface of one of the electrodes 17.

(The Configuration of the Apparatus for Writing to and Reading from the Optical Memory Medium)

Fig. 5 is a typical view of an apparatus for writing to and reading from an optical memory medium according to the present invention. The apparatus shown in Fig. 5 is obtained by replacing the optical memory medium 1 of the optical recording apparatus shown in Fig. 2 with an optical memory piezoelectric medium 15, and by adding a circuit 18 for measuring the characteristics of the piezoelectric medium 15. The circuit 18 for measuring the characteristics of the piezoelectric medium 15 detects changes in the admittance of the piezoelectric medium 15 by measuring a difference between a voltage of an oscillation circuit and a voltage across the piezoelectric medium 15. The circuit 18 exhibits a response speed on the order of 10 μm for the piezoelectric medium 15 having a resonance frequency on the order of 10 MHz. Further, with this circuit 18, the piezoelectric medium 15 can be caused to vibrate with a reference piezoelectric element, and changes in the characteristics the piezoelectric medium 15 can be monitored by detecting changes in the resonance frequency of the piezoelectric medium 15 using a balanced mixer. This apparatus allows memory bits to be optically written and read.

The present invention can be implemented utilizing various photochemical reactions such as photooxidation, photoreduction, cis-trans photoisomerization, photochromic reactions in addition to the photolysis of CMPTS described above. The surface modification can be performed using various methods other than the

silane-coupling process as described, such as methods for making films including self-organizing films made of thiol compounds, Langmuir-Blodgett films made of amphipathic compounds and the like. In addition, the vapor deposition method, spin coat method and the like may also be used.

Memory erasure can be accomplished by applying light having a different wavelength to the thin film, as in cis-trans photoisomerization and reversible photochromic reactions, or by thermally returning the medium to the initial state.

As a method for writing information on the whole optical memory medium at one time, recording can be achieved by applying a metal mask, made by photolithography, to a surface of a quartz substrate in tight contact with the optical memory medium and by directing light on the rear surface of the quartz substrate. This method is effective for writing tracks for determining bit addresses and for making a large number of copies of the information recorded thereon.

As a method for moving the optical memory medium in the horizontal direction, a mechanism for rotating the optical memory medium may be provided in the coarse adjustment mechanism to perform optical recording in the form of rings or a spiral, in addition to a method of moving the medium in the X- and Y-directions to record in the form of squares.

The optical memory medium and the recording and read apparatuses using this optical memory medium make it possible to record and reproduce information with high density.

THE EMBODIMENTS OF THE INVENTION IN WHICH AN EXCLUSIVE PROPERTY OR PRIVILEGE IS CLAIMED ARE DEFINED AS FOLLOWS:

1. An optical memory comprising a substrate, and an optically reactive functional group on a surface of said substrate which undergoes structural change upon optical reaction to cause change in the friction coefficient of said surface.

2. An optical memory comprising a piezoelectric substrate, and an optically reactive functional group on a surface of said substrate which undergoes structural change upon optical reaction to cause change in the friction coefficient of said surface.

3. An optical memory medium according to claim 2, wherein said piezoelectric substrate is an AT cut quartz plate.

4. An optical memory medium according to claim 1, wherein said optically reactive functional group is selected from a species which exhibits a property selected from: photolytic reaction, photooxidation, photoreduction, cis-trans photoisomerization, and photochromic reaction.

5. An apparatus for optically recording digital information on an optical memory medium coated with an optically reactive functional group which undergoes structural change upon optical reaction to cause change in the friction coefficient of said surface for recording information, comprising:

a light source for generating a light beam;

an optical probe having a probe end and an opposite end, a microscopic aperture at the probe end for focusing said light beam on said optical memory medium, said light beam being introduced to the optical probe at the opposite end; and

an X-Y-Z position control means for controlling a relative position between the probe end of said optical probe and the surface of said optical memory medium.

6. An apparatus for optically recording digital information on an optical memory medium comprising a piezoelectric substrate coated with an optically reactive functional group which undergoes structural change upon optical reaction to cause change in the friction coefficient of a surface of said substrate for recording information, comprising:

a light source for generating a light beam;

an optical probe having a probe end and an opposite end, a microscopic aperture at the probe end for focusing said light beam on said optical memory medium, said light beam being introduced to the optical probe at the opposite end; and

an X-Y-Z position control means for controlling a relative position between the probe end of said optical probe and the surface of said optical memory medium.

7. An apparatus for optically recording digital information as claimed in claim 6, further comprising a means for measuring the resonance characteristics of a piezoelectric substrate.

8. An apparatus for optically recording digital information as claimed in claim 5, wherein said optically reactive functional group is selected from a species which exhibits properties selected from: photolytic reaction, photooxidation, photoreduction, cis-trans photoisomerization, and photochromic reaction.

9. An apparatus for optically recording digital information as claimed in claim 5, wherein said X-Y-Z position control means comprises a deflection monitoring means for monitoring a vertical deflection of said optical probe, including a laser and a two-piece photo detector.

10. An apparatus for reading optically recorded digital information on an optical memory medium coated with an optically reactive functional group which undergoes structural change upon optical reaction to cause change in the friction coefficient of the surface of said optical memory medium on which digital information is recorded comprising:

a friction detection probe having a microscopic projection at a leading end thereof for detecting a frictional force between the surface of said optical memory medium and the leading end; and

an X-Y-Z position control means for controlling a relative position between the leading end of said friction detecting probe and the surface of said optical memory medium.

11. An apparatus for reading optically recorded digital information on an optical memory medium comprising a piezoelectric substrate coated with an optically reactive functional group which undergoes structural change upon optical reaction to cause change in the friction coefficient of the surface of said substrate on which digital information is recorded comprising:

a friction detection probe having a microscopic projection at a leading end thereof for detecting a frictional force between the surface of said optical memory medium and the leading end; and

an X-Y-Z position control means for controlling a relative position between the leading end of said friction detecting probe and the surface of said optical memory medium.

12. An apparatus

for reading optically recorded digital information as claimed in claim 11, further comprising a means for measuring the resonance characteristics of the piezoelectric substrate.

13. An apparatus for reading optically recorded digital information as claimed in claim 10, wherein said optically reactive functional group is selected from a species exhibiting properties of photolytic reaction, photooxidation, photoreduction, cis-trans photoisomerization, and photochromic reaction.

14. An apparatus for reading optically recorded digital information as claimed in claim 10, wherein said X-Y-Z position control means comprises a deflection and torsion monitoring means for monitoring a vertical deflection and axial torsion of said friction detecting probe, including a laser and four-piece photo detector.

FIG. 1A

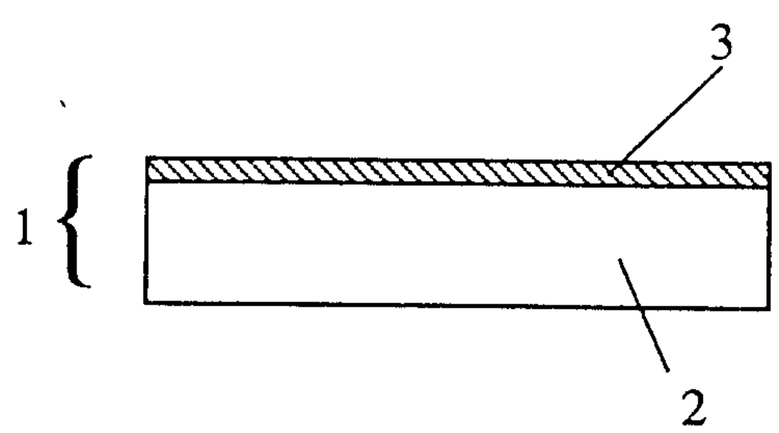

FIG. 1B

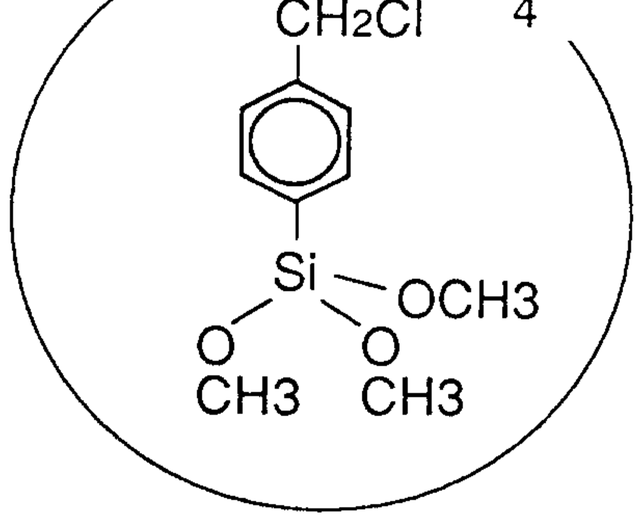

FIG. 2

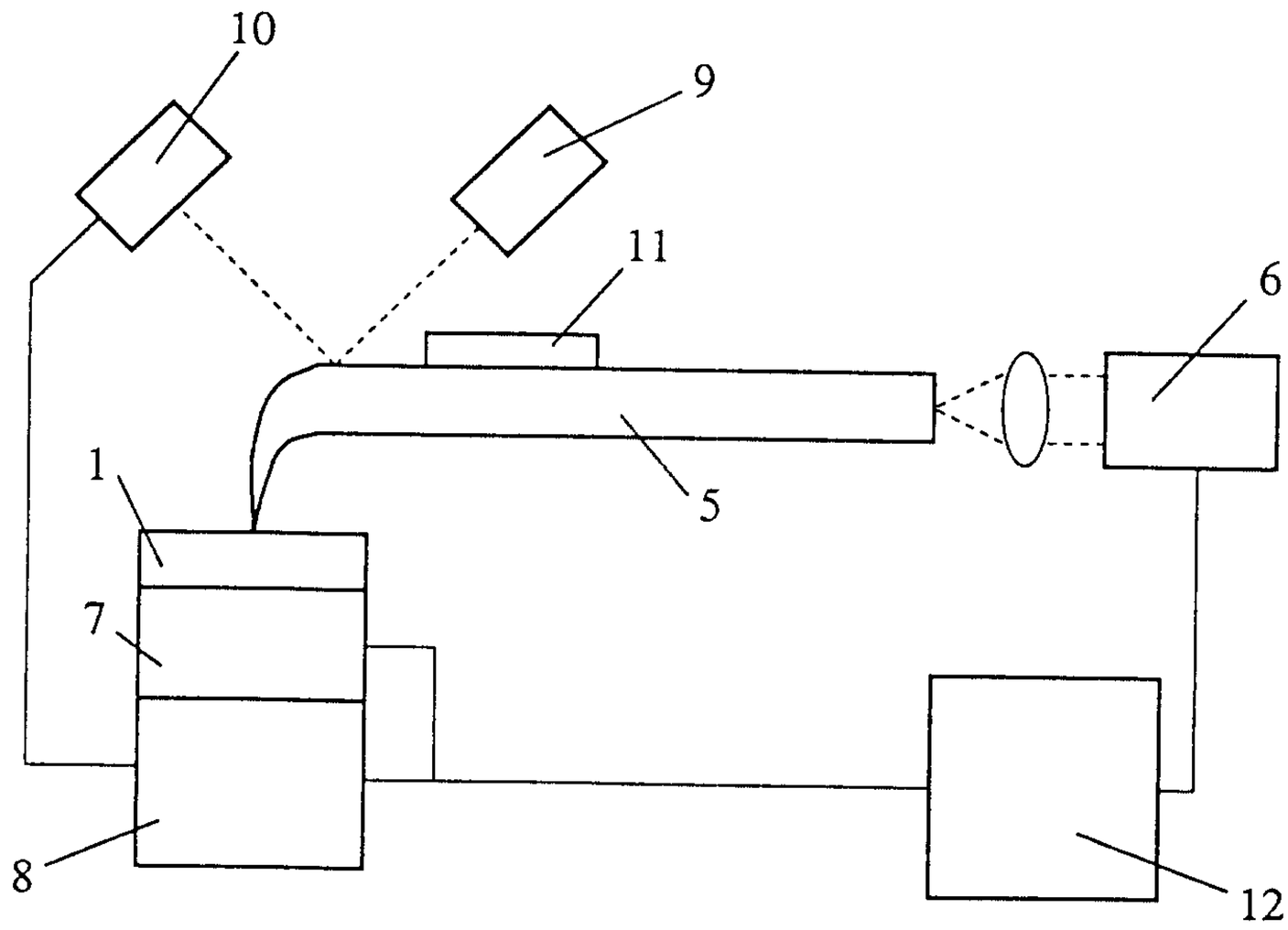

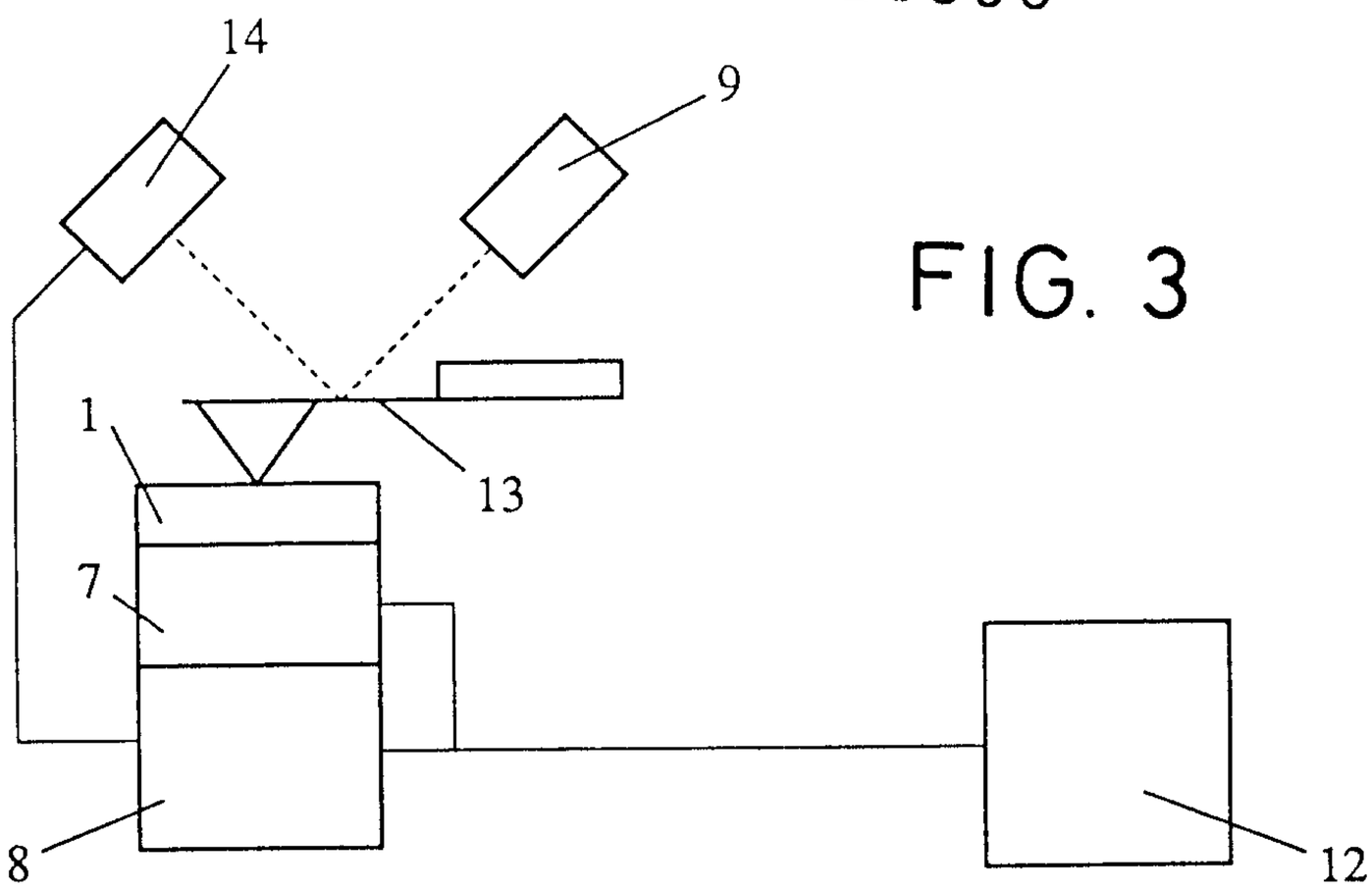

FIG. 3

FIG. 4

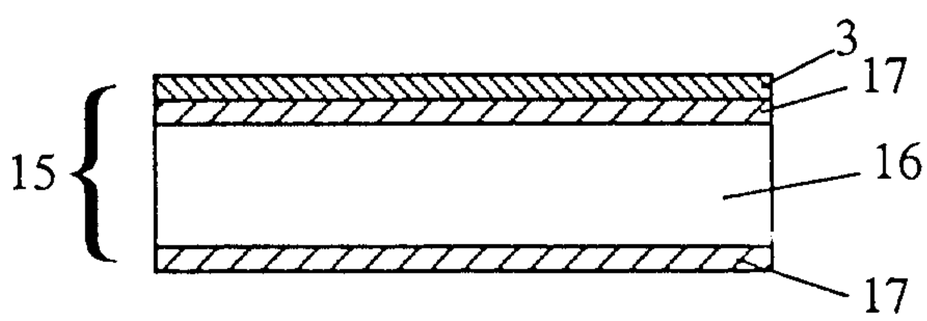

FIG. 5

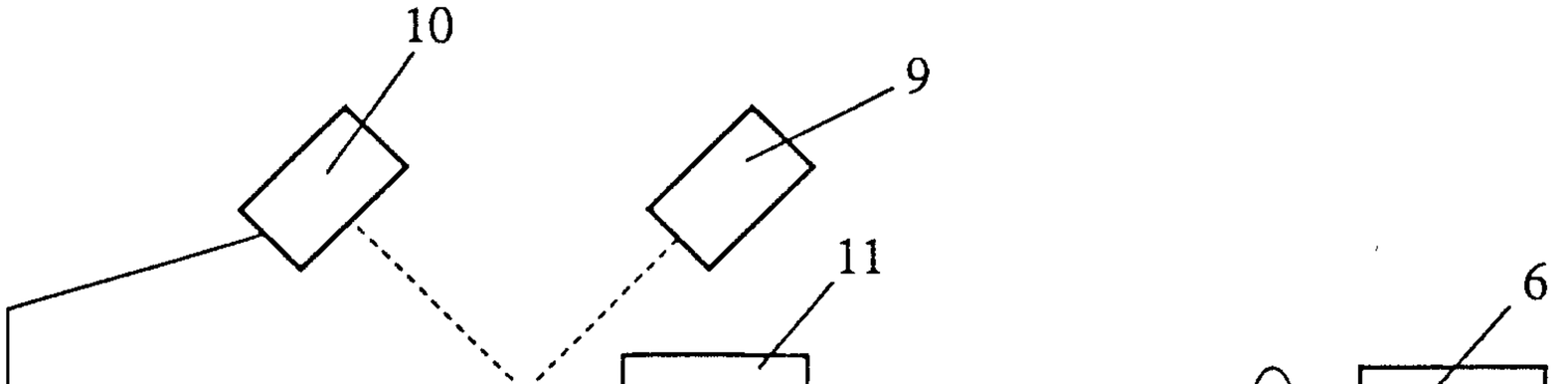

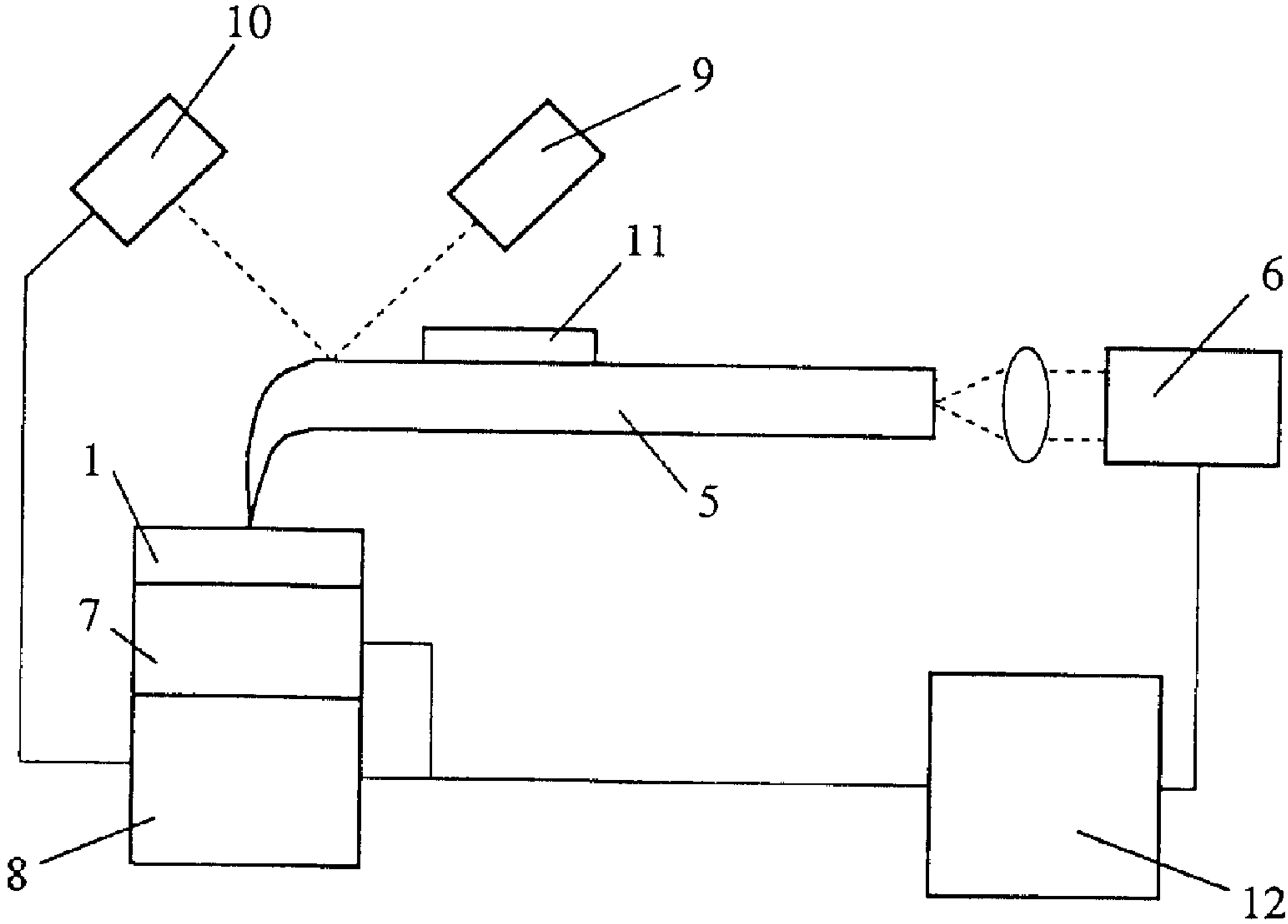
10
9
11
6
1
5
7
8
12