US 20020014084A1

(19) United States

(12) Patent Application Publication (10) Pub. No.: US 2002/0014084 A1

Kaneda et al. (43) Pub. Date: Feb. 7, 2002

(54) SUBSTRATE-PROCESSING APPARATUS

(76) Inventors: **Masatoshi Kaneda**, Kikuchi-gun (JP); **Masami Akimoto**, Kumamoto-shi (JP); **Nobuyuki Jinnai**, Kumamoto-shi (JP)

Correspondence Address:
RADER FISHMAN & GRAUER PLLC
LION BUILDING
1233 20TH STREET N.W., SUITE 501
WASHINGTON, DC 20036 (US)

(21) Appl. No.: **09/916,342**

(22) Filed: **Jul. 30, 2001**

Related U.S. Application Data

(63) Continuation of application No. 09/432,170, filed on Nov. 2, 1999.

(30) **Foreign Application Priority Data**

Nov. 5, 1998 (JP) 10-330227

Publication Classification

(51) **Int. Cl.**[7] **F25D 17/04**; F25B 49/00

(52) **U.S. Cl.** **62/176.6**

(57) **ABSTRACT**

A substrate-processing apparatus comprising a processing chamber in which a substrate is processed, an air-supplying device for supplying air having controlled temperature and humidity into the processing chamber, an air passage having an inlet port and an outlet port connected to the processing chamber, for guiding the air from the inlet port to the outlet port, a cooling/dehumidifying section arranged in the air passage and having a thermoelectric cooling device, for cooling and dehumidifying the air introduced from the inlet port, a heating section arranged in the air passage, for heating the air that has been cooled and dehumidified by the cooling/dehumidifying section, a humidifying section provided in the air passage, for humidifying the air heated by the heating section and guiding the air to the outlet port, a temperature-humidity sensor provided at a position in the air passage, and a control device for controlling the cooling/dehumidifying section, the heating section and the humidifying section, in accordance with temperature and humidity detected at the position in the air passage, thereby to adjust the temperature and humidity of the air to be supplied from the outlet port.

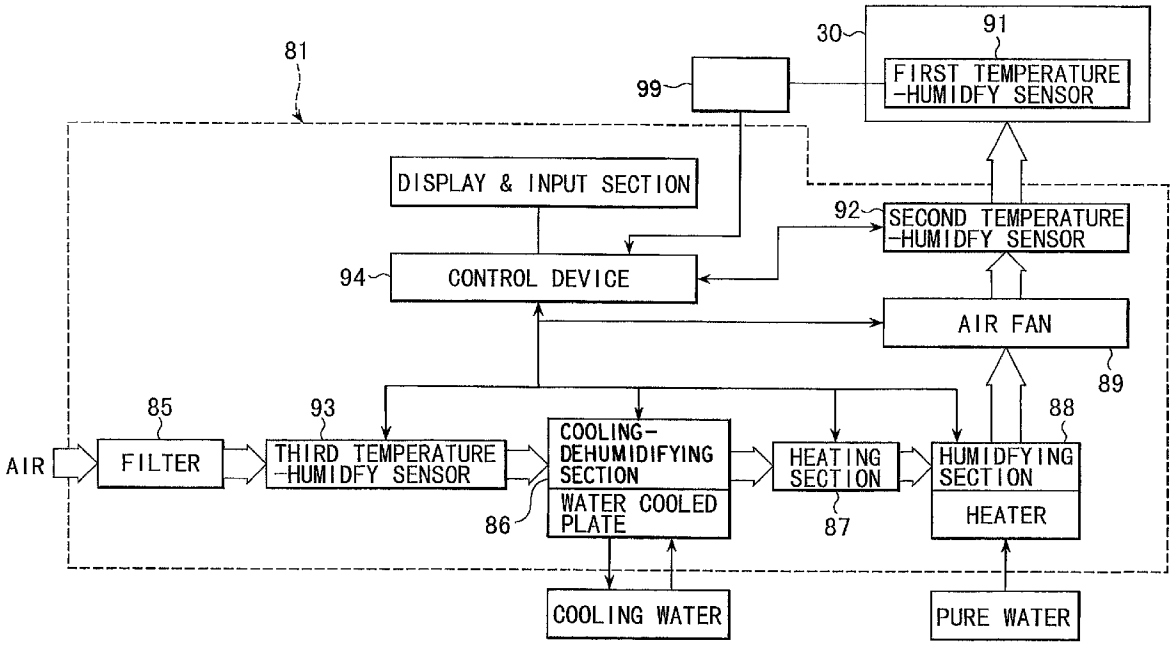

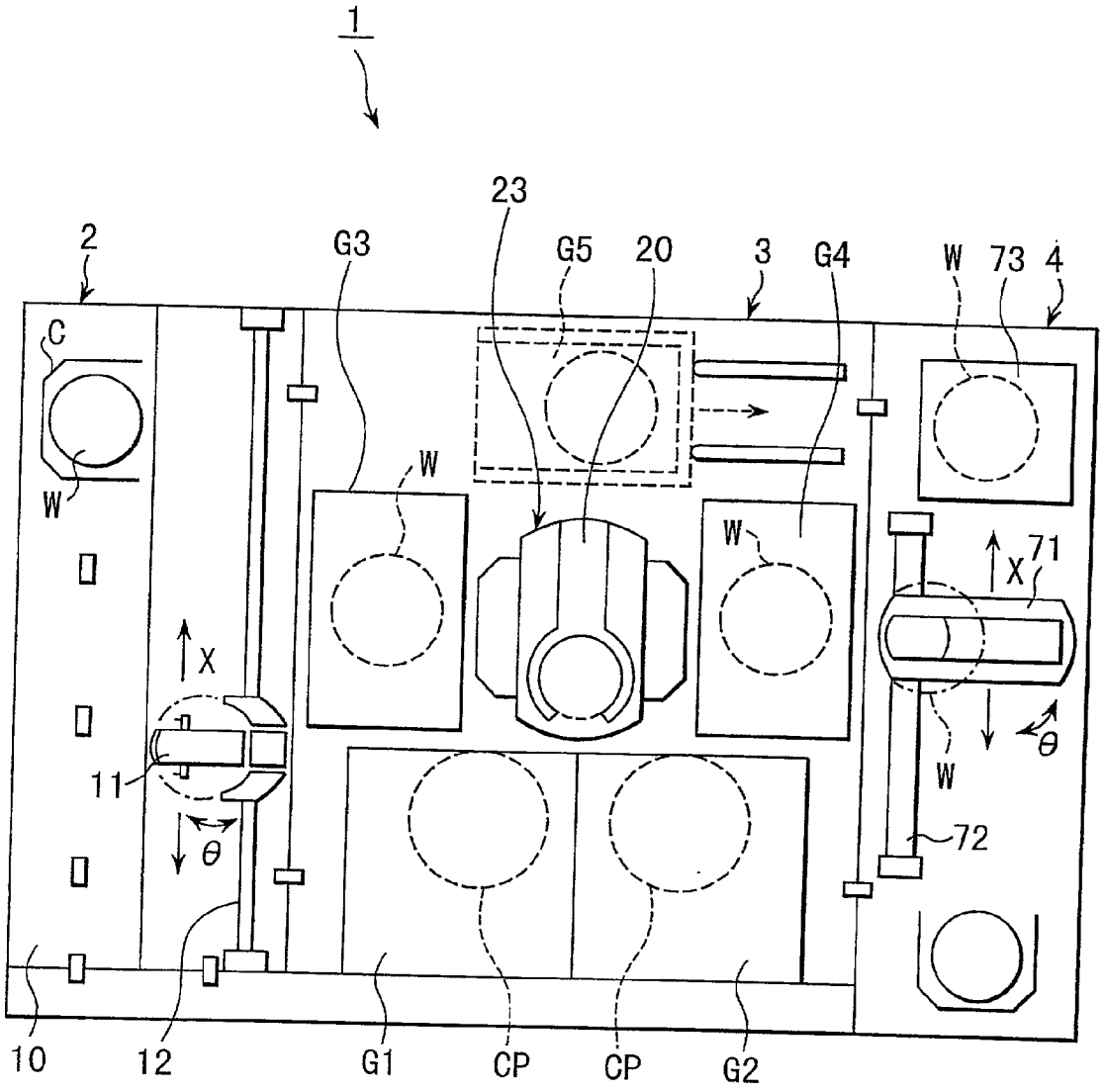

FIG. 1

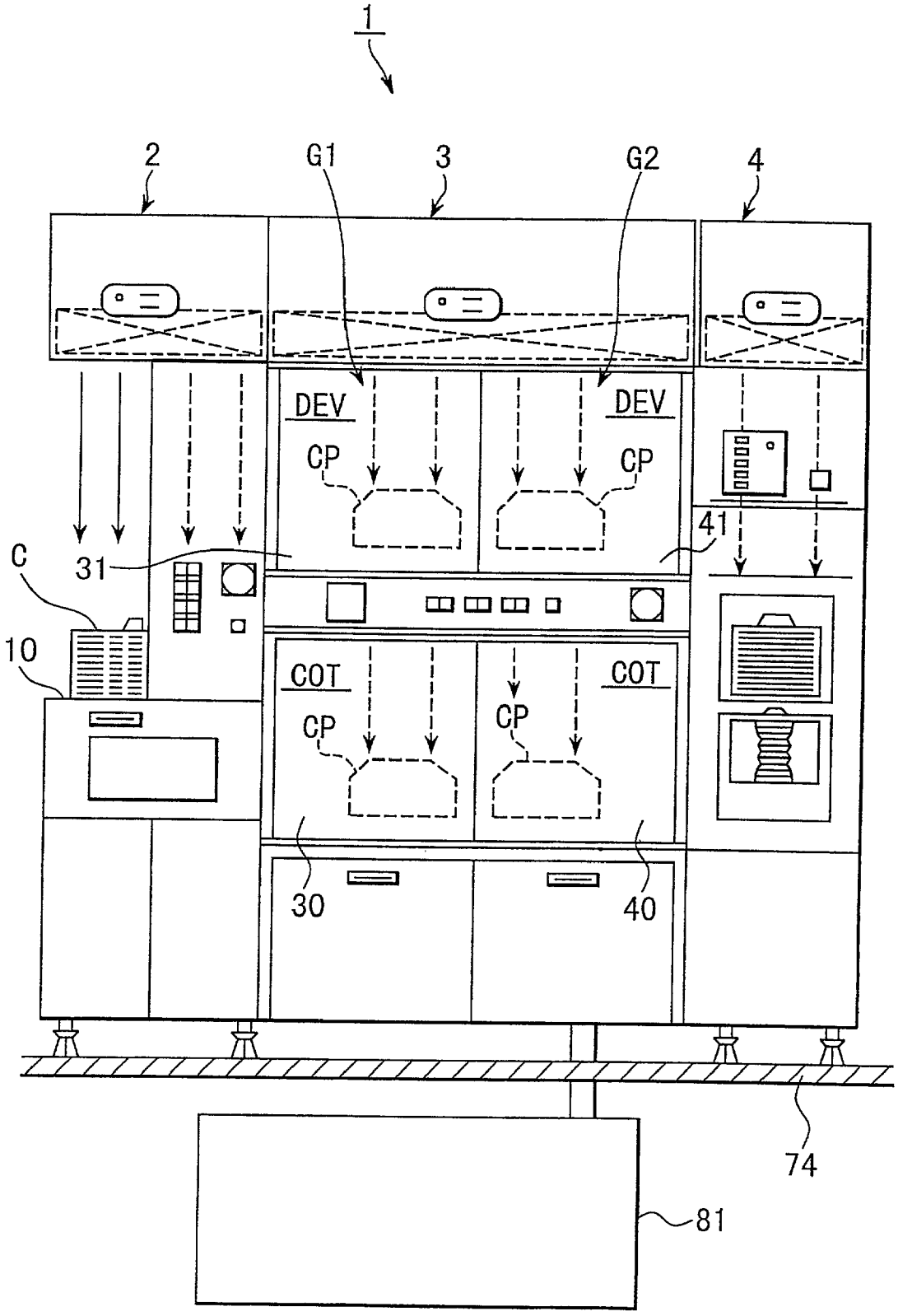

FIG. 2

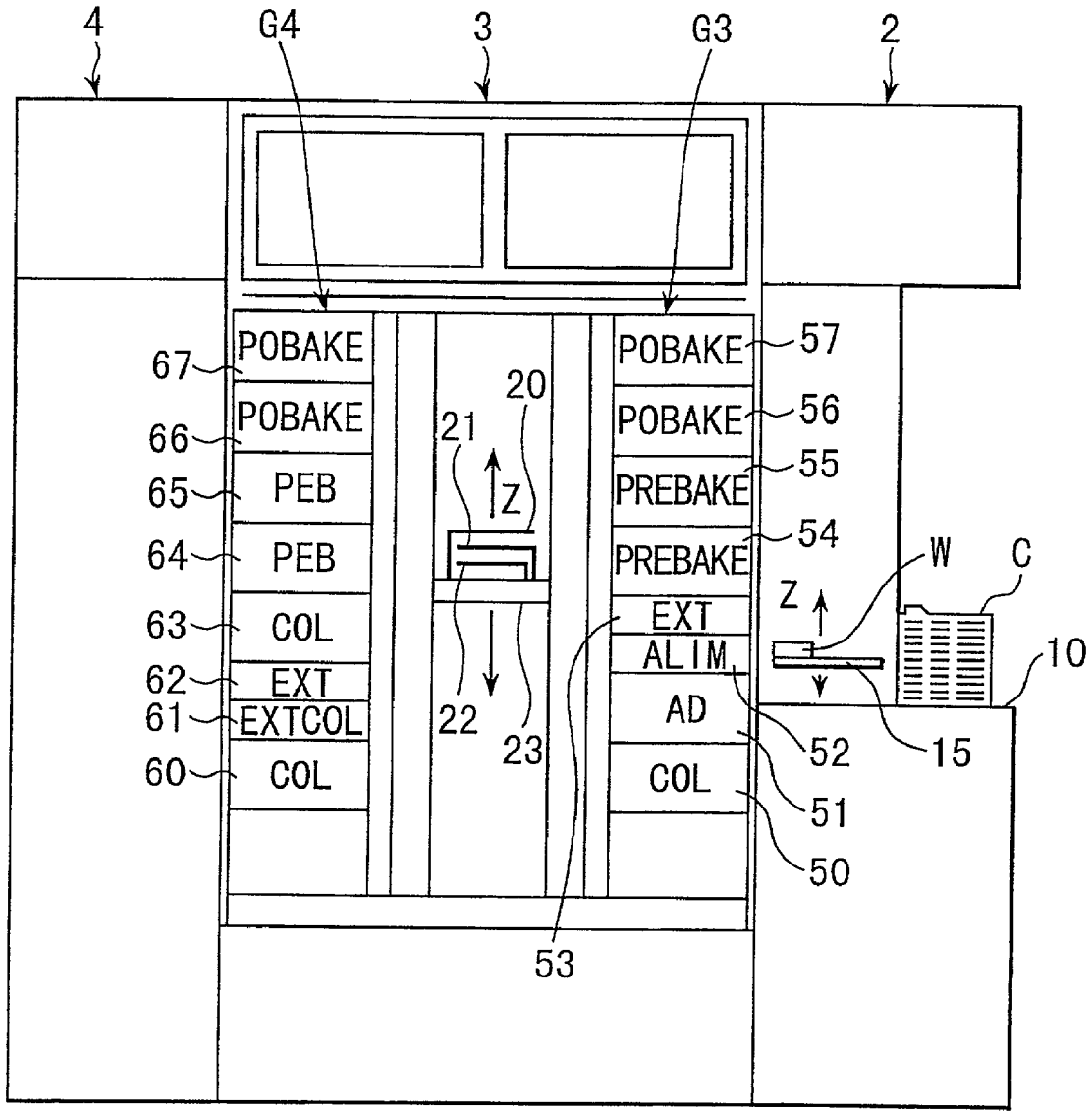
4
G4
3
G3
2
POBAKE
POBAKE
PEB
PEB
COL
EXT
EXTCOL
COL
67
66
65
64
63
62
61
60
20
21
Z
22
23
POBAKE
POBAKE
PREBAKE
PREBAKE
EXT
ALIM
AD
COL
57
56
55
54
52
51
50
53
W
C
Z
10
15

FIG. 3

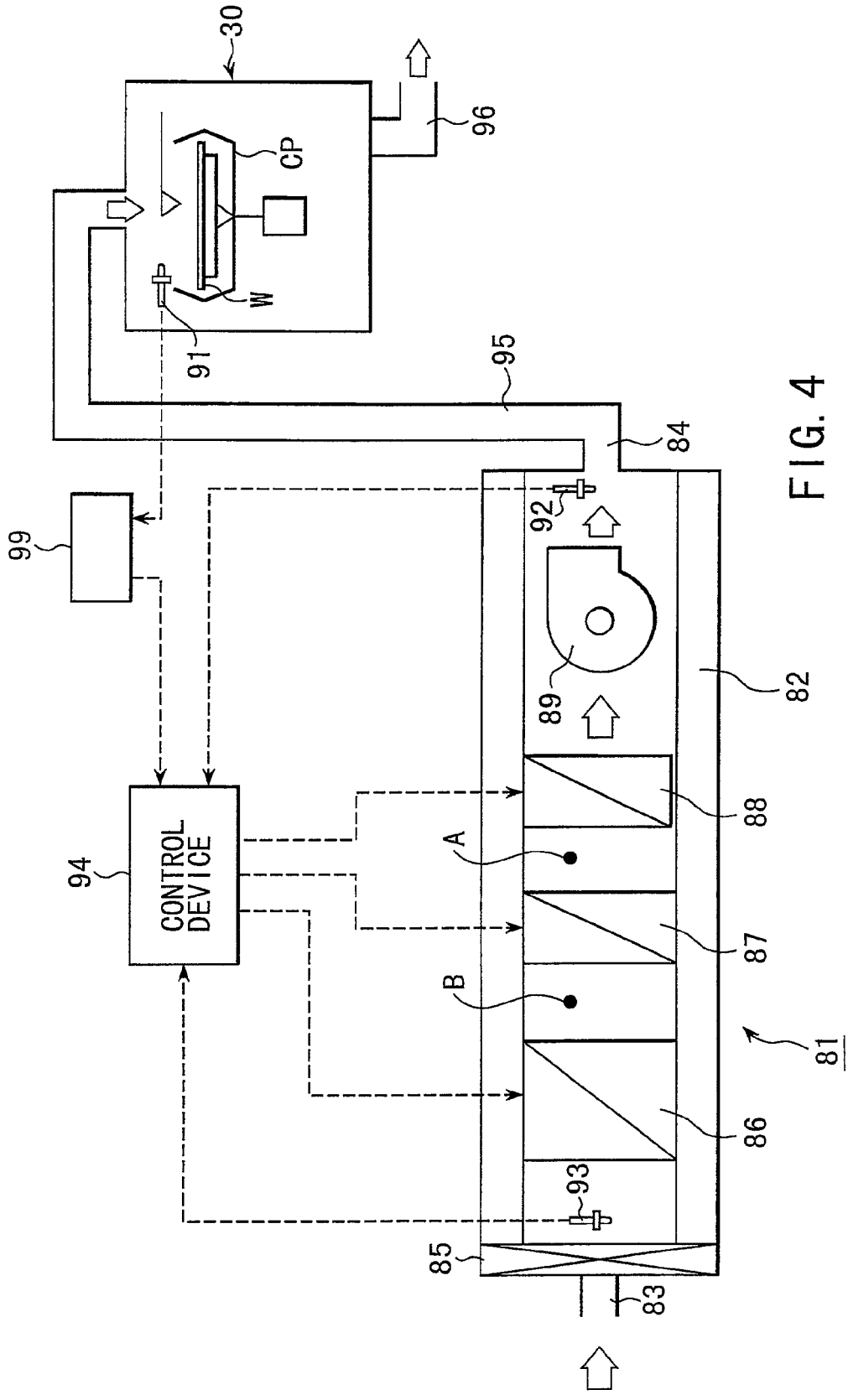
30
96
CP
W
91
95
84
99
92
89
82
88
94
CONTROL DEVICE
A
87
B
81
86
93
85
83

FIG. 4

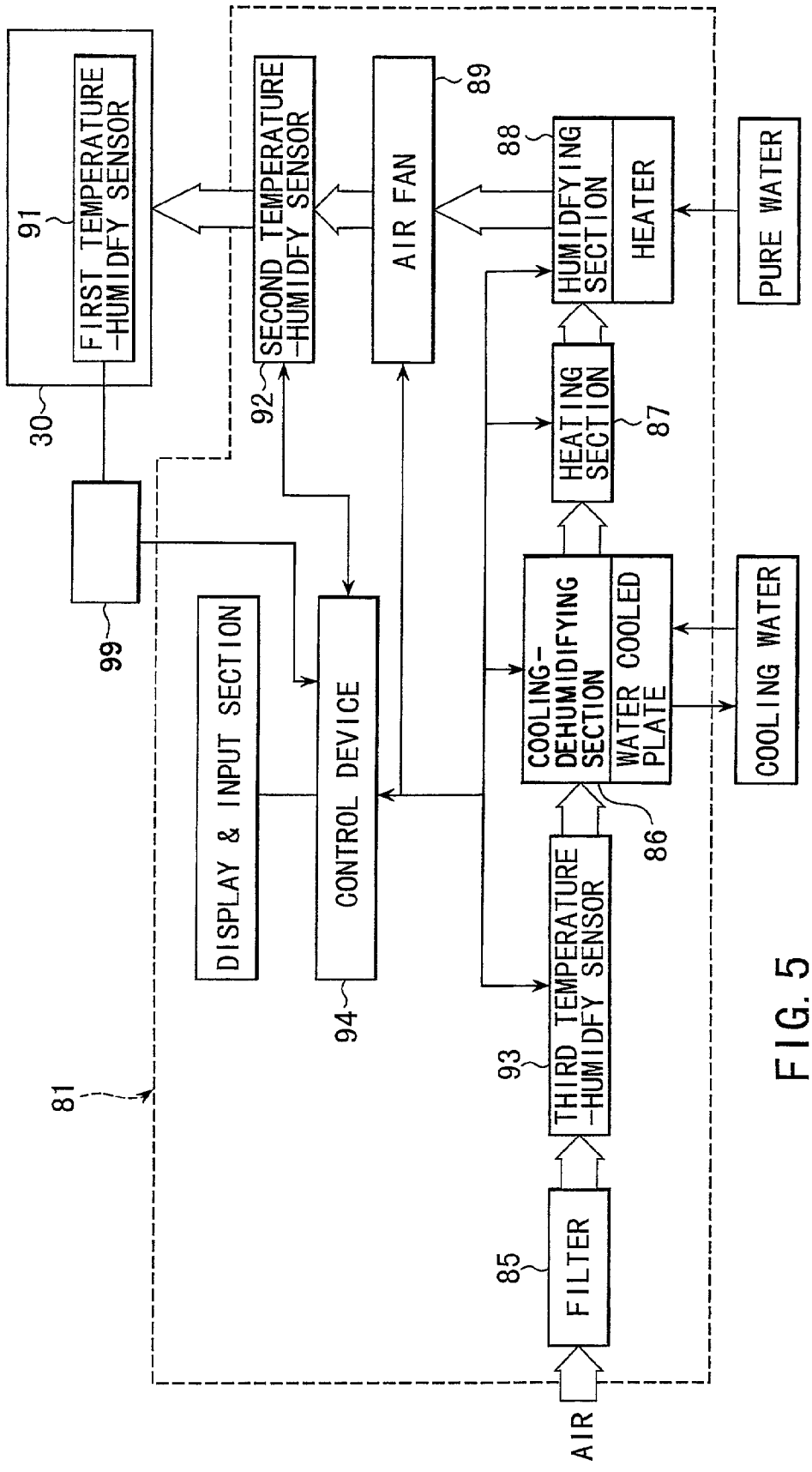
81
AIR
85
FILTER
93
THIRD TEMPERATURE -HUMIDFY SENSOR
86
COOLING-DEHUMIDIFYING SECTION
WATER COOLED PLATE
COOLING WATER
94
CONTROL DEVICE
DISPLAY & INPUT SECTION
87
HEATING SECTION
88
HUMIDFYING SECTION
HEATER
PURE WATER
89
AIR FAN
92
SECOND TEMPERATURE -HUMIDFY SENSOR
99
30
91
FIRST TEMPERATURE -HUMIDFY SENSOR

FIG. 5

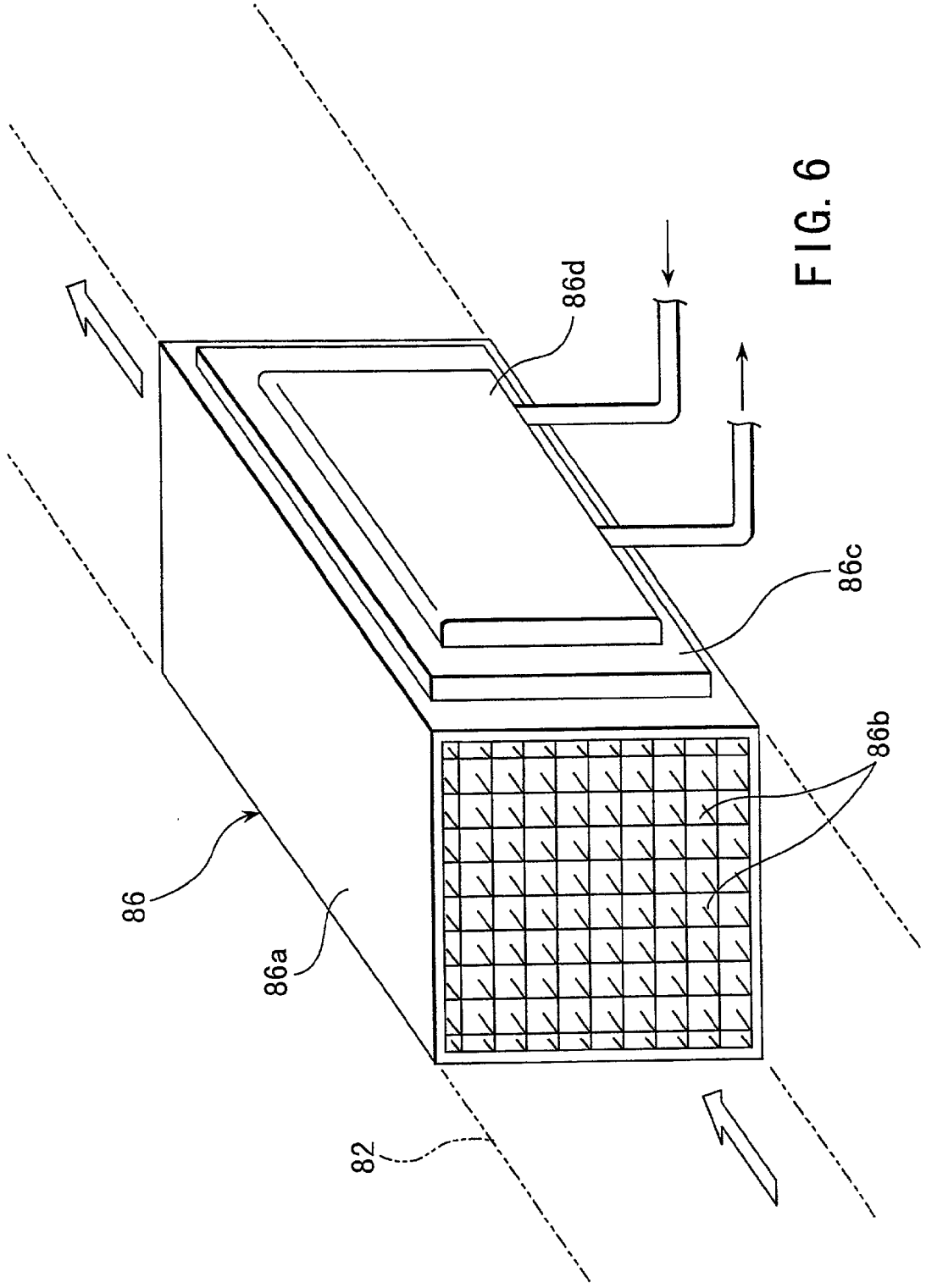

FIG. 6

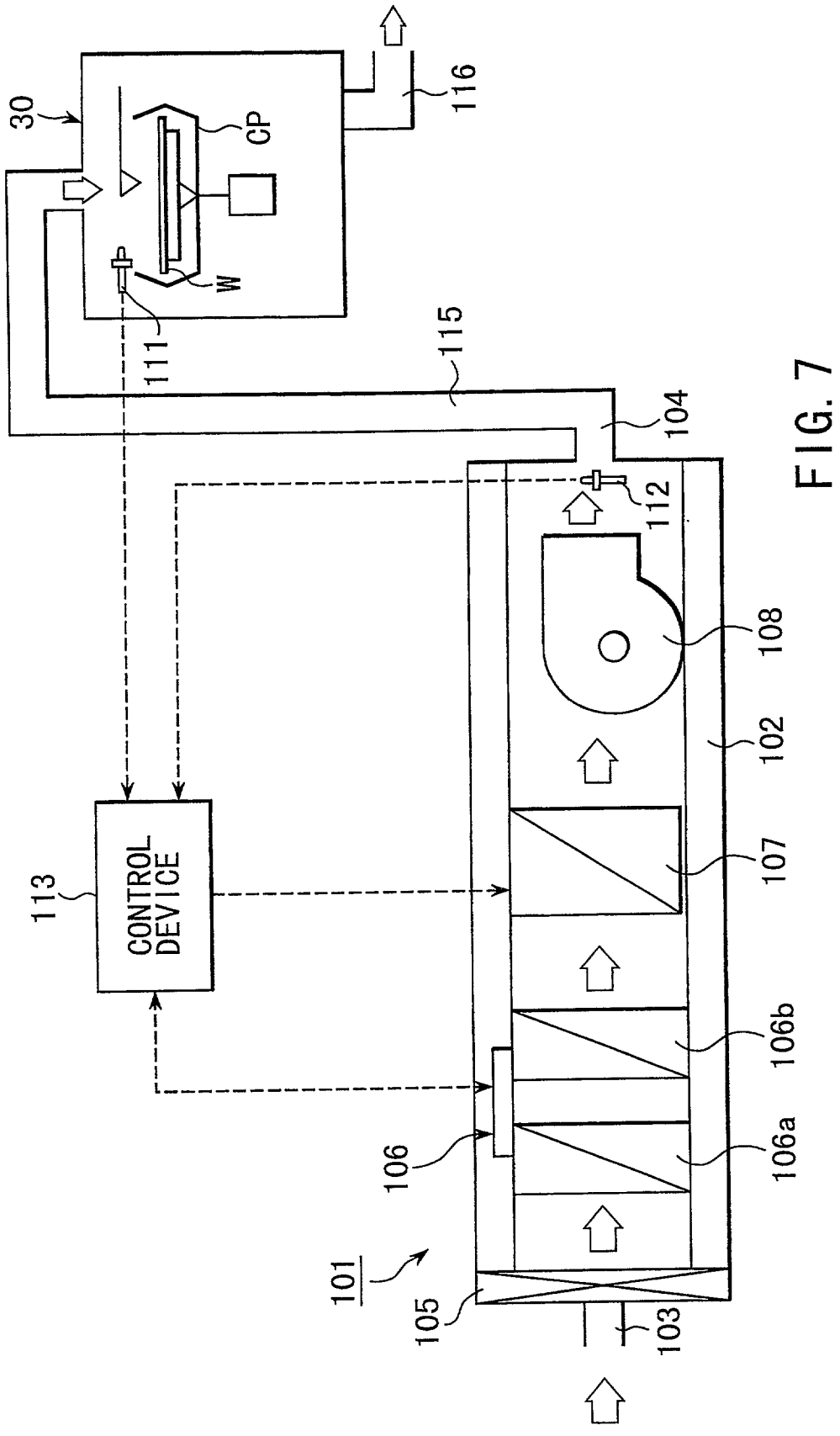
30
CP
116
W
111
115
104
112
108
102
107
106b
106a
106
101
105
103
113
CONTROL DEVICE

FIG. 7

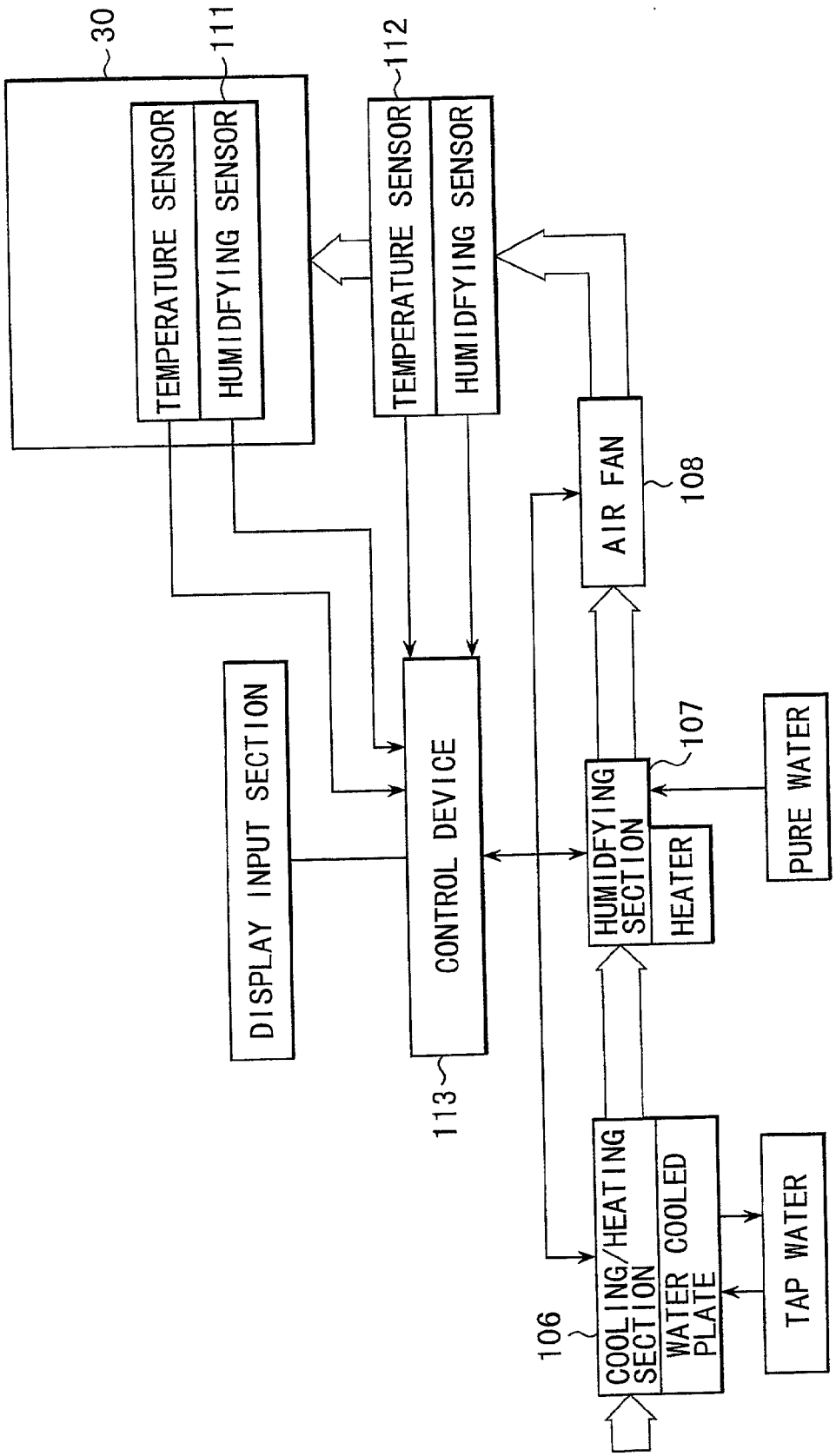
30
111
TEMPERATURE SENSOR
HUMIDFYING SENSOR
112
TEMPERATURE SENSOR
HUMIDFYING SENSOR
AIR FAN
108
DISPLAY INPUT SECTION
CONTROL DEVICE
113
HUMIDFYING SECTION
HEATER
107
PURE WATER
106
COOLING/HEATING SECTION
WATER COOLED PLATE
TAP WATER

FIG. 8

SUBSTRATE-PROCESSING APPARATUS

BACKGROUND OF THE INVENTION

[0001] This application is based on Japanese Patent Application No. 10-330227 (filed Nov. 5, 1998), the content of which is incorporated herein by reference.

[0002] The present invention relates to a substrate-processing apparatus.

[0003] In the step of performing photolithography on, for example, a semiconductor wafer (hereinafter referred to as "wafer"), the wafer is coated with resist, forming a resist film, the resist film is exposed to light applied via a pattern, and the resist film is subjected to developing. This sequence of processes is carried out by a coating/developing apparatus that incorporates process units designed to perform the processes, respectively.

[0004] In the coating/developing apparatus, the resist-coating unit, for example, coats wafers with resist solution, generally by means of spin coating method. In the spin coating method, a substrate is rotated at high speed, thereby spreading resist over the wafer by virtue of a centrifugal force and forming a resist film on the wafer.

[0005] The thickness of the resist film greatly depends on the ambient temperature and humidity of the wafer. Generally, air set at prescribed temperature and humidity is supplied Into the process vessel, thereby maintaining the wafer in a prescribed atmosphere. The air is supplied by an air-supplying device. Air is introduced into the air-supplying device from, for example, a clean room. In the air-supplying device, a cooling-dehumidifying section having a refrigerator cools the air to a temperature near the dew point, for example to 4° C. Then, a heating section having a heater heats the air to a desirable temperature of, for example, 23° C. Next, a humidifying section humidifies the air to a desired humidity of, for example, 45% (RH) Thereafter, the air is supplied into the process vessel by means of a fan.

[0006] The temperature and humidity of the air to be supplied into the process vessel is controlled by feedback control in most cases. In the feedback control, a temperature-humidity sensor provided in the process vessel detects the temperature and humidity, which is fed back to control the temperature and humidity of the air. Like most refrigerators, the refrigerator of the cooling-dehumidifying section cannot control temperature minutely and is always driven to generate a constant output. Hence, the temperature and humidity detected by the sensor is fed back to the heating section and humidifying section only, thereby to control the temperature and humidity.

[0007] Therefore, the air is always dehumidified and cooled to a prescribed low temperature in the conventional apparatus. Much energy is inevitably wasted. Further, the use of a refrigerator increases the installation space of the conventional apparatus,

[0008] In consideration of the forgoing, the present invention has been made. The object of this invention is to provide a novel substrate-processing apparatus which can control temperature and humidity, while saving more energy and more space than the conventional apparatus, and can lower the temperature and humidity to prescribed values within a shorter time than the conventional apparatus, thereby to solve the above-mentioned problems.

BRIEF SUMMARY OF THE INVENTION

[0009] To achieve the object described above, a substrate-processing apparatus according to the primary aspect of the invention comprises: a processing chamber in which a substrate is processed; an air-supplying device for supplying air having controlled temperature and humidity into the processing chamber; an air passage having an inlet port and an outlet port connected to the processing chamber, for guiding the air from the inlet port to the outlet port; a cooling/dehumidifying section arranged in the air passage and having a thermoelectric cooling device, for cooling and dehumidifying the air introduced from the inlet port; a heating section arranged in the air passage, for heating the air that has been cooled and dehumidified by the cooling/dehumidifying section; a humidifying section provided in the air passage, for humidifying the air heated by the heating section and guiding the air to the outlet port; a temperature-humidity sensor provided at a position in the air passage; and a control device for controlling the cooling/dehumidifying section, the heating section and the humidifying section, in accordance with temperature and humidity detected at the position in the air passage, thereby to adjust the temperature and humidity of the air to be supplied from the outlet port.

[0010] The cooling/dehumidifying section, which has a thermoelectric cooling element, such as Peltier elements, can minutely set a temperature for the air, in accordance with the energy the heating section and humidifying section. Thus, the cooling/dehumidifying section helps to save energy in the entire substrate-processing apparatus. Moreover, having Peltier elements, the cooling/dehumidifying section can have a high response and can adjust the air temperature with high accuracy.

[0011] In the first embodiment of the invention, the control device controls the cooling/dehumidifying section in accordance with an operation output of the heating section or humidifying section. It is therefore desired that control device should control the cooling/dehumidifying section in accordance with the operation output of the heating section or humidifying section, such that the operation output of the heating section or humidifying section remains to surpass a predetermined threshold value.

[0012] In the first embodiment, the temperature-humidity sensor is provided in the inlet port of the air passage, and the air acquires, in the outlet port, the temperature and humidity adjusted by the control device.

[0013] The first embodiment further comprises a temperature-humidity sensor for detecting temperature and humidity at a peripheral part of the substrate, and the control device determines the temperature and humidity to be adjusted by the control device, from the temperature and humidity detected by the temperature-humidity sensor at the peripheral part of the substrate.

[0014] In the first embodiment, the temperature-humidity sensor is provided between the cooling/dehumidifying section and the heating section, and the control device controls the cooling/dehumidifying section in accordance with outputs of the heating section and humidifying section, thereby to impart a predetermined temperature to the air that has passed through the cooling/dehumidifying section.

[0015] Additional objects and advantages of the invention will be set forth in the description which follows, and in part will be obvious from the description, or may be learned by practice of the invention. The objects and advantages of the invention may be realized and obtained by means of the instrumentalities and combinations particularly pointed out hereinafter.

BRIEF DESCRIPTION OF THE SEVERAL VIEWS OF THE DRAWING

[0016] The accompanying drawings, which are incorporated in and constitute a part of the specification, illustrate presently preferred embodiments of the invention, and together with the general description given above and the detailed description of the preferred embodiments given below, serve to explain the principles of the invention.

[0017] **FIG. 1** is a plan view of a coating/developing apparatus, which is an embodiment of the present invention;

[0018] **FIG. 2** is a front view of the coating/developing apparatus shown in **FIG. 1**;

[0019] **FIG. 3** is a rear view of the coating/developing apparatus shown in **FIG. 1**;

[0020] **FIG. 4** is a schematic sectional view illustrating the structure of the air-supplying device used in the coating/developing apparatus shown in **FIG. 1**;

[0021] **FIG. 5** is a diagram illustrating the structure of the air-supplying device shown in **FIG. 4**;

[0022] **FIG. 6** is a perspective view of the cooling/dehumidifying section used in the air-supplying device shown in **FIG. 5**;

[0023] **FIG. 7** is a schematic sectional view depicting the structure of another type of an air-supplying; and

[0024] **FIG. 8** is a diagram illustrating the structure of the air-supplying device shown in **FIG. 7**.

DETAILED DESCRIPTION OF THE INVENTION

[0025] Preferred embodiments of the present invention will be described, with reference to the accompanying drawings.

[0026] (First Embodiment)

[0027] FIGS. **1** to **3** present an outer appearance of a coating/developing apparatus **1**, which is an embodiment of this invention. **FIG. 1** is a plan view, **FIG. 3** is a front view, and **FIG. 3** is a rear view.

[0028] As shown in **FIG. 1**, the coating/developing apparatus **1** has a cassette station **2**, a process station **3**, and an interface section **4**, which are connected together. The cassette station **2** is provided to receive a cassette C containing wafers W from an external apparatus and to supply the cassette C to an external apparatus. The process station **3** incorporates various process units each designed to process wafers W one after another. The interface section **4** transfers wafers W between the process station **3** and an exposure apparatus (not shown).

[0029] The cassette station **3** has a cassette table **10**. On the cassette table **10**, a plurality of cassettes C can be mounted in a row extending in X direction (i.e., depthwise direction in **FIG. 1**), each having its inlet/outlet port opposing the process station **3**. On the cassette table **10**, a wafer carrier **11** can move along a transport path **12**, in the X direction in which the cassettes C are arranged, and can move in Z direction (i.e., vertical direction), too, in which wafers W are stacked in each cassette C. Thus, the wafer carrier **11** can have an access to any wafer W held in any cassette C mounted on the cassette table **10**.

[0030] The wafer carrier **11** can rotate in θ direction, too, and can therefore have an access to an alignment apparatus **52** and extension apparatus **53** that belong to the multi-stage unit of the third process-unit group G_3. The third process-unit group is provided in the process station **3**, which will be described below.

[0031] In the process station **3**, a main carrier **23** is arranged. As shown in **FIG. 3**, the main carrier **23** has three pairs of pincers at its center part. The pairs of pincers are arranged one above another, each for holding a waver W. Around the main carrier **23** there are arranged process-unit groups, each composed of process units laid one upon another. At most five process-unit groups G_1, G_2, G_3, G_4, and G_5 can be provided in the coating/developing apparatus **1**. The first and second groups G_1 and G_2 are arranged in the front section of the apparatus **1**. The third group G_3 is located near the cassette station **2**. The fourth group G_4 is positioned near the interface section **4**. The fifth group G_5, indicated by broken lines, can be arranged in the rear section of the apparatus **1**.

[0032] In the first process-unit group G_1, two spinner-type process units, each designed to perform a specific process on a wafer W held by a spin chuck in a cap CP, are provided as is illustrated in **FIG. 2**. These process units are, for example, a resist-coating unit **30** and a developing unit **31**. The unit **31** is mounted on the top of the unit **30**, thus constituting a two-stage structure. Similarly, in the second process-unit group G_2, a resist-coating unit **40** and a developing unit **41** is mounted on the top of a coating unit **40**, constituting a two-stage structure.

[0033] In the third process-unit group G_3, open-type process units, each designed to perform a specific process on a wafer W mounted on a table, are provided as is illustrated in **FIG. 3**. The process units are, for example, a cooling unit **50** for cooling a wafer W, an adhesion unit **51** for rendering a wafer W hydrophobic so that resist may be well fixed on the wafer W, an alignment unit **52** for positioning a wafer W, an extension unit **53** for holding a wafer w at a waiting position, two pre-baking units **54** and **55** for heating wafers W coated with resist, and two post-baking units **56** and **57** for heating wafers W subjected to developing process. These process units are stacked in the order they are mentioned, constituting an eight-stage structure. In the fourth process-unit group G_4, a cleaning unit **60**, an extension/cleaning unit **61** for cooling a wafer W held at a waiting position, an extension unit **62**, a cleaning unit **63**, post-exposure baking units **64** and **65** for heating wafers W subjected to exposure process, and post-baking units **66** and **67** are stacked in the order they are mentioned, constituting an eight-stage structure. The combination and order, in which the process units are stacked, may be changed as is desired.

[0034] A wafer carrier **71** is provided on the center part of the interface section **4**. Like the wafer carrier **11**, the wafer

carrier **71** can move in the X direction along a transport path **72** and in the Z direction (i.e., the vertical direction) and can rotate in the θ direction. Therefore, the carrier **71** can transfer wafers W to and from the extension cooling unit **61** and extension unit **62**, both belonging to the fourth process-unit group G**4**. Further, the carrier **71** can transfer wafers W to and from a periphery-exposing unit **73** which is provided in the rear section of the apparatus **1** and which is designed to remove resist film from the peripheral edge of a wafer W.

[**0035**] As shown in **FIG. 2**, the coating/developing apparatus **1** is installed on a grating **74** that serves as the floor of a clean room. An air-supplying device **81** is arranged in the space below the grating **74**.

[**0036**] The air-supplying device **81** has the structure shown in **FIGS. 4 and 5**. More specifically, the device **81** comprises a chamber **82** having an inlet port **83** and an outlet port **84**. In the chamber **82**, a filter **85** for catching particles, a cooling/dehumidifying section **86** for cooling and dehumidifying the air cleaned by the filter **85**, a heating section **87** for heating the air cooled and dehumidified by the cooling/dehumidifying section **86**, a humidifying section **88** for humidifying the air heated by the heating section **87**, and an air blower **89** for supplying the air humidified by the humidifying section **88**, into, for example, the resist-coating unit **30** through the outlet port **84** of the chamber **82**, are arranged in the order mentioned, from the inlet port **33** toward the outlet port **34**.

[**0037**] As shown in **FIG. 6**, the cooling/dehumidifying section **86** comprises a casing **86***a* and a number of fins **86***b*. The casing **86***a* is provided in the chamber **82** and contains the fins **86***b*. The fins **86***b* are thermally connected to two cooling bodies **86***c*, which are composed of a thermoelectric device, for example, Peltier elements and which are provided on the sides of the casing **86***a*, respectively. Two water-cooled plates **86***d* are attached to the cooling bodies **86***c*, respectively, for cooling the heat-radiating sections of the cooling bodies **86***c*. In each water-cooled plate **86***d*, cooling water, such as tap water, circulates to cool the plate **86***d*. In the cooling/dehumidifying section **86**, the dehumidification of air is minutely controlled by, for example, the power supply to the Peltier elements.

[**0038**] The heating section **87** incorporates an electric heater. The humidifying section **88** is of the type having an electric heater for evaporating pure water. Both sections **87** and **88** can be minutely controlled by, adjusting the power supply to the electric heaters.

[**0039**] In the resist-coating unit **30**, for example, a first temperature-humidity sensor **91** is provide in the cup CP, to detect the temperature and humidity in the cup CP. Further, a second temperature-humidity sensor **92** is provided in the outlet port **84** of the air-supplying device **81**, in order to detect the temperature and humidity of the air passing through the outlet port **84**. Still further, a third temperature-humidity sensor **93** is provided at the downstream of the filter **85**, which in turn is located at the downstream of the inlet port **83** of the air-supplying device **81**. The third sensor **93** can therefore detect the temperature and humidity of the air that has passed through the inlet port **83**.

[**0040**] As shown in **FIG. 4**, the second sensor **92** and third sensor **93** generates signals representing the temperatures and humidities the sensors **92** and **93** have detected. The signals are supplied to a control device **94**. As will be described later in detail, the control device **94** controls the cooling/dehumidifying section **86**, heating section **87** and humidifying section **88**, basically in accordance with the difference between the temperatures detected by the second sensor **92** and third sensor **93** and also the difference between the humidities detected by these sensors **92** and **93**, thereby to adjust the temperature and humidity of air to prescribed values before the air is supplied through the outlet port **84**.

[**0041**] The air supplied through the outlet port **84** is supplied into the cup CP of the resist-coating unit **30** through a duct **95**. The air in the cup CP is thereby adjusted to prescribed temperature and prescribed humidity. The air in the resist-coating unit **30** is exhausted through an exhaust duct **96** into, for example, the central exhaust system provided in the factory wherein the coating/developing apparatus **1** is installed.

[**0042**] How the control device **94** controls the temperature and humidity of air will now be explained.

[**0043**] As described above, the control device **94** controls the cooling/dehumidifying section **86**, heating section **87** and humidifying section **88**, in accordance with the differences between the temperatures detected by the second sensor **92** and third sensor **93** and also the difference between the humidities detected by these sensors **92** and **93**. It should be noted that the second sensor **92** is located at a particular position to detect a target temperature and a target humidity , while the third sensor **93** is provided to detect the temperature and humidity of the air to be introduced into the air-supplying device **81**.

[**0044**] Assume that the target the target temperature and humidity for the position where the second sensor **92** is located are 23° C. and 45% (RH), and that the temperature and humidity of the air to be introduced into the air-supplying device **81** are 24° C. and 50% (RH). In this case, the control device **94** performs its function as follows.

[**0045**] The control device **94** operates the heating section **87** and humidifying section **88** at 20% or less of the output capacity of these sections **87** and **88**, where 20% is selected as the threshold output value, in order to reduce power consumption as much as possible in the sections **87** and **88**.

[**0046**] Since the heating section **87** is operated at 20% or less of the output capacity and the air need to be humidified in the humidifying section **88**, the air must be set at 10 to 11C at point B (**FIG. 4**) right after it has passed through the cooling/dehumidifying section **86**. To drive the humidifying section **88** at, for example, 20% of its output capacity, for example, thereby to impart a desired humidity to air, it is necessary to set the air at about 17° C. right after the air has passed through the heating section **87**.

[**0047**] The control device **94** first controls the cooling/dehumidifying section **86**, thus cooling the air introduced via the input port **83** from 25° C. to 10 to 11° C. and dehumidifying the air. The control device **94** then drives the heating section **87**, thereby heating the air a target value of 17° C. Finally, the control device **94** drives the humidifying section **88**, thus humidifying the air to a final humidity, or a target humidity of 45%. Therefore, the air passing thorough the outlet port **84** has already been set at the temperature of 23° C. and the humidity of 45%.

[0048] The control device **94** keeps monitoring the outputs of the heating section **87** and humidifying section **88**. If the outputs of the sections **87** and **88** surpass the threshold output value, i.e., 20% of the output capacity of the sections **87** and **88**, they are reduced. If the output of the heating section **87**, for example, needs to be reduced, the target temperature for point B is increased, and the cooling/dehumidifying section **86** is controlled in accordance with the target temperature increased. In other words, the cooling/dehumidifying section **86** absorbs the energy that has been saved in the heating section **87** and humidifying section **88**. In this case, too, the cooling/dehumidifying section **86** has a high response and can minutely adjust the target temperature for point B, because it has Peltier elements that are high-response components.

[0049] In this embodiment, the temperature and humidity of air are so controlled that the air supplied into the resist-coating unit **30** have the same temperature and humidity as those of the air passing through the outlet port **84**. However, the temperature and humidity of air may be practically influenced by the disturbance while the air is flowing through the duct **95**. In view of this, a target temperature for the air passing through the outlet port **84** may be set in accordance with the difference between the temperatures the first sensor **91** and second sensor **92** have detected.

[0050] In this case, the control device **94** is designed to receive the output value of the first sensor **91** via the control device **99** that is provided in the coating/developing apparatus **1**.

[0051] The coating/developing apparatus **1** having the structure described above operates as will now be described. First, in the cassette station **2** the wafer carrier **11** removes the wafers W, which are not processed yet, from a cassette C mounted on the cassette table **10**. The wafer carrier **11** then transports the wafers W into the alignment apparatus **52** that belongs to the third process-unit group G_3. The alignment apparatus **52** aligns the wafers W. The main carrier **23** transports the wafers W from the alignment apparatus **52** into the adhesion unit **51**. In the adhesion unit **51**, the wafers W are made hydrophobic. The wafers W are then transported into the cooling unit **50** that belongs to the third process-unit group G_3. The cooling unit **50** cools the wafers W to a predetermined temperature. Thereafter, the wafers W are transported into the resist-coating unit **30** that belongs to the first process-unit group G_1. In the resist-coating unit **30**, the surface of each wafer W is coated with a resist film having a prescribed thickness by means of spin coating.

[0052] The thickness of the resist film greatly depends on temperature and humidity. It is therefore necessary to adjust the temperature and humidity in the cup CP to desired values. In the present embodiment, the air-supplying device **81** supplies into the cup CP the air adjusted to the prescribed temperature and humidity. Thus, the atmosphere in the cup CP is maintained at the desired values.

[0053] Air is controlled in terms of temperature and humidity in the air-supplying device **81** in the manner described above. Therefore, the following advantages are attained in the coating/developing apparatus **1**.

[0054] Not only the temperatures and humidities in not only the heating section **87** and humidifying section **88**, but also the temperature and humidity in the cooling/dehumidifying section **86** are controlled by supplying air adjusted to the prescribed temperature and humidity from the air-supplying device **81** into the cooling/dehumidifying section **86**, unlike in the conventional coating/developing apparatus. Moreover, the cooling/dehumidifying section **86** has Peltier elements, which achieve a high-precision control of temperature and humidity in the heating section **87**, humidifying section **88**, and cooling/dehumidifying section **86**. Hence, the cooling/dehumidifying section **86** can operate to supply air of desired temperature and humidity, while reducing the outputs (i.e., energy consumption) of the heating section **87** and humidifying section **88** (for example, to 20% or less of their maximum outputs).

[0055] By contrast, the conventional coating/developing apparatus comprises a cooling/dehumidifying section having a refrigerator that is operated to generate a fixed output. Having a refrigerator, the cooling/dehumidifying section cannot minutely control temperature. The heating section and the humidifying section must therefore be controlled in accordance with the temperature and humidity of the air supplied from the refrigerator. As a consequence, the coating/developing apparatus, as a whole, consumes a great amount of energy. To be more specific, a considerable amount of energy is consumed, not only in the refrigerator but also in the heating section and humidifying section, because air is cooled in the refrigerator to a temperature near the dew point, then heated in the heating section and finally humidified in the humidifying section.

[0056] The coating/developing apparatus **1** according to the invention has no refrigerator for cooling air to such a low temperature. The apparatus **1** as a whole can therefore save more energy as compared with the conventional coating/developing apparatus. Further, the heating section **87** and humidifying section **88** are hardly influenced by disturbance in most cases, particularly while they are operating with a small amount of energy. The sections **87** and **88** can, therefore, control the temperature and humidity of the air with high efficiency.

[0057] Since the Peltier elements control the temperature of air, the air-supplying device **81** can have a high response and control the temperature and humidity of the air with high accuracy. Having no refrigerator, the coating/developing apparatus **1** can save more installation space than the conventional apparatus, which comprises a refrigerator.

[0058] The position where the third sensor **93** is provided near the inlet port **83** is not limited to the position specified above. The third sensor **93** may be located at, for example, point B. In this case, the temperature to which the cooling/dehumidifying section **86** should cool the air is set in accordance with the outputs of the heating section **87** and humidifying section **88**. The cooling/dehumidifying section **86** may then be controlled in accordance with the temperature and humidity detected by the third sensor **93** located at point B.

[0059] (Second Embodiment)

[0060] The second embodiment of the present invention will now be described.

[0061] The air-supplying device **81** of the first embodiment cools, dehumidifies, heats and humidifies the air introduced into it. Instead the device **81**, the air-supplying device **101** shown in **FIGS. 7 and 8** may be used to perform a

process, such as resist coating, on a substrate at a humidity higher than the humidity of the air introduced into the device **101**. In other words, if the air need not be dehumidified, the air-supplying device **101** that is more simple than the apparatus **1** can be used, thereby saving more energy and more space than the air-supplying device **81**.

[**0062**] The air-supplying device **101** shown in **FIGS. 7 and 8** has a chamber **102** that has an inlet port **103** and an outlet port **104**. In the chamber **102**, a filter **105** for catching particles, a cooling/heating section **106** for cooling and heating the air cleaned by the filter **105**, a humidifying section **107** for humidifying the air cooled or heated by the cooling/heating section **106**, and an air blower **107**, such as a DC fan, for supplying the air humidified by the humidifying section **107** into, for example, the resist-coating unit **30** through the outlet port **104** of the chamber **102**, are arranged in the order mentioned, from the inlet port **103** toward the outlet port **104**.

[**0063**] The cooling/heating section **106** comprises a cooling section **106***a* and a heating section **106***b*. Like the cooling/dehumidifying section **68** described above, the cooling section **106***a* has Peltier elements. The heating section **106***b* has an electric heater, which generates heat when supplied with an electric power.

[**0064**] If the air-supplying device **101** is incorporated in the coating/ developing apparatus **1** of **FIG. 1, a** first temperature-humidity sensor **111** is provided in the cup CP of, for example, the resist-coating unit **30** to detect the temperature and humidity in the cup CP. Further, a second temperature-humidity sensor **112** is provided in the outlet port **104** of the air-supplying device **101** to detect the temperature and humidity of the air passing through the outlet port **104**. The output signal of the first sensor **111**, which represents the temperature and humidity the sensor **111** has detected, is supplied to a control device **113**. The output signal of the second sensor **112**, which represents the temperature and humidity the sensor **112** has detected, is supplied to a control device **113**, too. The air flowing from the outlet port **104** is supplied through a duct **115** into the cup CP of the resist-coating unit **30**. The air in the resist-coating unit **30** is exhausted through an exhaust duct **116** into, for example, the central exhaust system provided in the factory wherein the coating/developing apparatus **1** is installed.

[**0065**] The cooling/heating section **106** and humidifying section **107** are feedback-controlled so that the temperature and humidity of the air flowing from the device **101** via the outlet port **104** may have the preset target values. The output signals of the first temperature-humidity sensor **111** and second temperature-humidity sensor **112** are, of course, continuously supplied to the control device **113**.

[**0066**] The use of the air-supplying device **101** of the structure described above renders it unnecessary to dehumidify the air, because the humidity in the cup CP is higher than that of the air introduced into the device **101** through the inlet port **103**. The cooling section **106***a* of the cooling/heating section **106** achieves minimum cooling required, because it has Peltier elements. The air-supplying device **101** therefore has a higher energy-saving efficiency than the conventional air-supplying device that has a refrigerator. The temperature and humidity of the air reach the desired values faster than in the conventional air-supplying device. Needless to say, the air-supplying device **101** helps to make the coating/developing apparatus **1** compact. The apparatus **1** can, therefore, still more save energy and installation space.

[**0067**] In the case of using this air-supplying device **101**, too, the third temperature-humidity sensor may be provided near the inlet port **103** of the device **101** as in the air-supplying device **81** described above. Further, as in the air-supplying device **81**, the control device **113** may controls the cooling/heating section **106** and humidifying section **107** in accordance with the differences between the temperatures detected by the second sensor **112** and the third sensor and also the difference between the humidities detected by the second sensor **112** and the third sensor. Still further, as in the air-supplying device **81**, the signal output from the first temperature-humidity sensor **111** may be supplied to the control device provided in the coating/developing apparatus **1**, so that this control device may output a control signal to the control device **113** in accordance with the differences between the final target values for temperature and humidity and the temperature and humidity represented by the signal output from the first sensor **111**.

[**0068**] The embodiments described above are coating/developing apparatus, each having an air-supplying device. Nonetheless, the present invention is not limited to the embodiments. Rather, the invention may be applied to other types of apparatuses wherein temperature and humidity must be controlled, such as a developing apparatus into which air needs to be supplied. Moreover, the substrates processed in the embodiments are wafers. The substrates are not limited to wafers in the present invention. They may be, for example, LCD substrates and any other type of substrates.

[**0069**] Additional advantages and modifications will readily occur to those skilled in the art. Therefore, the invention in its broader aspects is not limited to the specific details and representative embodiments shown and described herein. Accordingly, various modifications may be made without departing from the spirit or scope of the general inventive concept as defined by the appended claims and their equivalents.

1. A substrate-processing apparatus comprising:

a processing chamber in which a substrate is processed;

an air-supplying device for supplying air having controlled temperature and humidity into the processing chamber;

an air passage having an inlet port and an outlet port connected to the processing chamber, for guiding the air from the inlet port to the outlet port;

a cooling/dehumidifying section arranged in the air passage and having a thermoelectric cooling device, for cooling and dehumidifying the air introduced from the inlet port;

a heating section arranged in the air passage, for heating the air that has been cooled and dehumidified by the cooling/dehumidifying section;

a humidifying section provided in the air passage, for humidifying the air heated by the heating section and guiding the air to the outlet port;

a temperature-humidity sensor provided at a position in the air passage; and

a control device for controlling the cooling/dehumidifying section, the heating section and the humidifying section, in accordance with temperature and humidity

detected at the position in the air passage, thereby to adjust the temperature and humidity of the air to be supplied from the outlet port.

2. A substrate-processing apparatus according to claim 1, wherein the control device controls the cooling/dehumidifying section in accordance with an operation output of the heating section or humidifying section.

3. A substrate-processing apparatus according to claim 2, wherein the control device controls the cooling/dehumidifying section in accordance with the operation output of the heating section or humidifying section, such that the operation output of the heating section or humidifying section remains to surpass a predetermined threshold value.

4. A substrate-processing apparatus according to claim 1, wherein the temperature-humidity sensor is provided in the inlet port of the air passage, and in the outlet port the air acquires the temperature and humidity adjusted by the control device.

5. A substrate-processing apparatus according to claim 1, further comprising a temperature-humidity sensor for detecting temperature and humidity at a peripheral part of the substrate, and the control device determines the temperature and humidity to be adjusted by the control device, from the temperature and humidity detected by the temperature-humidity sensor at the peripheral part of the substrate.

6. A substrate-processing apparatus according to claim 1, wherein the temperature-humidity sensor is provided between the cooling/dehumidifying section and the heating section, and the control device controls the cooling/dehumidifying section in accordance with outputs of the heating section and humidifying section, thereby to impart a predetermined temperature to the air that has passed through the cooling/dehumidifying section.

* * * * *