US 20200238603A1

(19) **United States**

(12) **Patent Application Publication**

BUDGE

(10) **Pub. No.: US 2020/0238603 A1**

(43) **Pub. Date: Jul. 30, 2020**

(54) **SYSTEM FOR ADDITIVELY MANUFACTURING COMPOSITE STRUCTURE**

(71) Applicant: **Continuous Composites Inc.**, Coeur d'alene, ID (US)

(72) Inventor: **TREVOR DAVID BUDGE**, Coeur d'Alene, ID (US)

(73) Assignee: **Continuous Composites Inc.**, Coeur d'Alene, ID (US)

(21) Appl. No.: **16/739,891**

(22) Filed: **Jan. 10, 2020**

Related U.S. Application Data

(60) Provisional application No. 62/797,078, filed on Jan. 25, 2019.

Publication Classification

(51) **Int. Cl.**

B29C 64/118	(2017.01)
B29C 64/245	(2017.01)
B29C 64/295	(2017.01)
B29C 64/209	(2017.01)
B29C 64/264	(2017.01)
B33Y 30/00	(2015.01)
B33Y 10/00	(2015.01)

(52) **U.S. Cl.**

CPC ***B29C 64/118*** (2017.08); ***B29C 64/245*** (2017.08); ***B29C 64/295*** (2017.08); *B33Y 10/00* (2014.12); ***B29C 64/264*** (2017.08); *B33Y 30/00* (2014.12); ***B29C 64/209*** (2017.08)

(57) **ABSTRACT**

A system for additively manufacturing a composite structure is disclosed. The system may include a support, and a print head operatively connected to and moveable by the support. The print head may be configured to discharge a continuous reinforcement that is at least partially coated in a liquid matrix. The system may also include a cure enhancer connected to the print head and configured to expose the discharge to cure energy to cause the, and a controller in communication with the heater and the cure enhancer. The controller may be configured to selectively activate the heater and the cure enhancer.

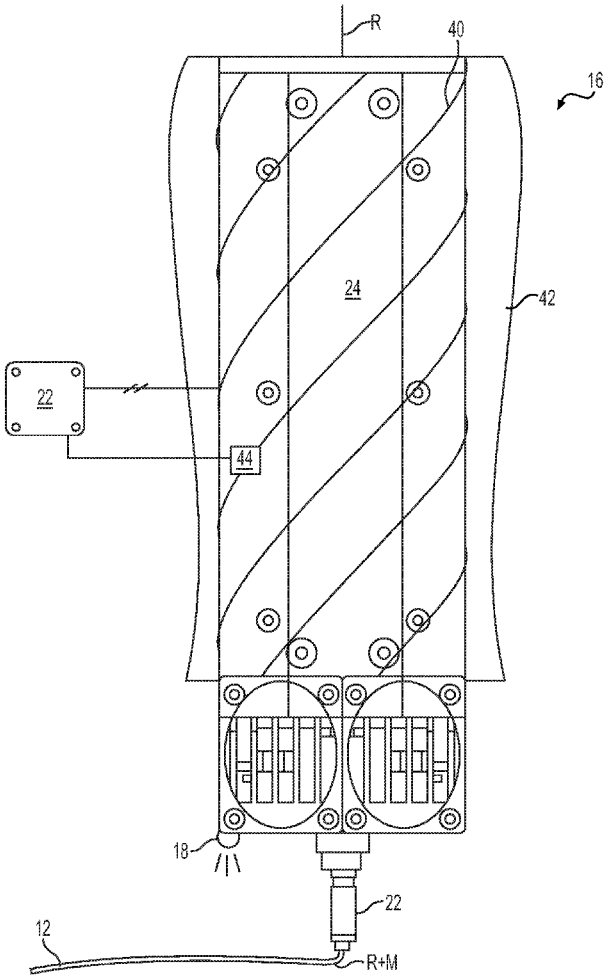

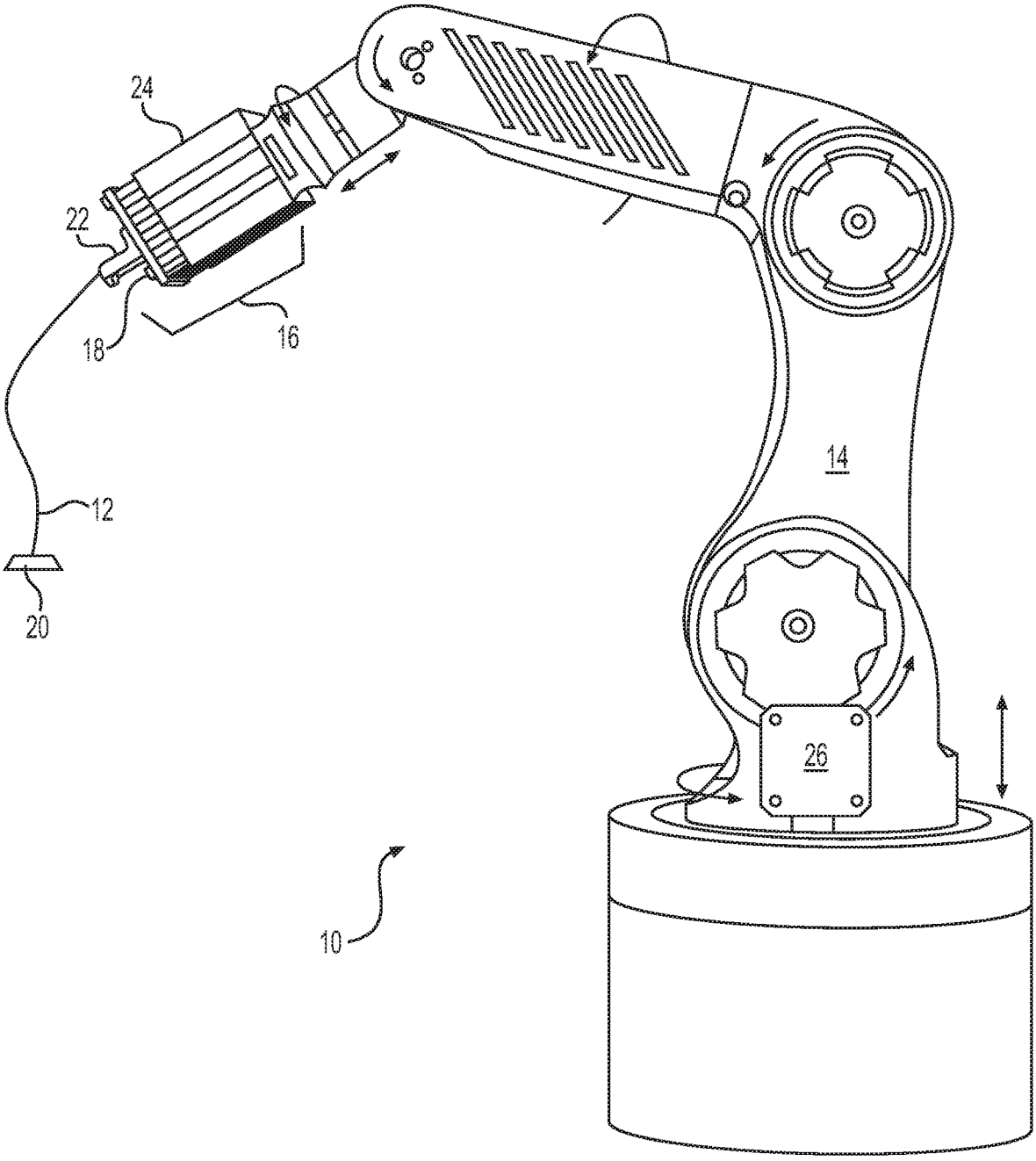

FIG. 1

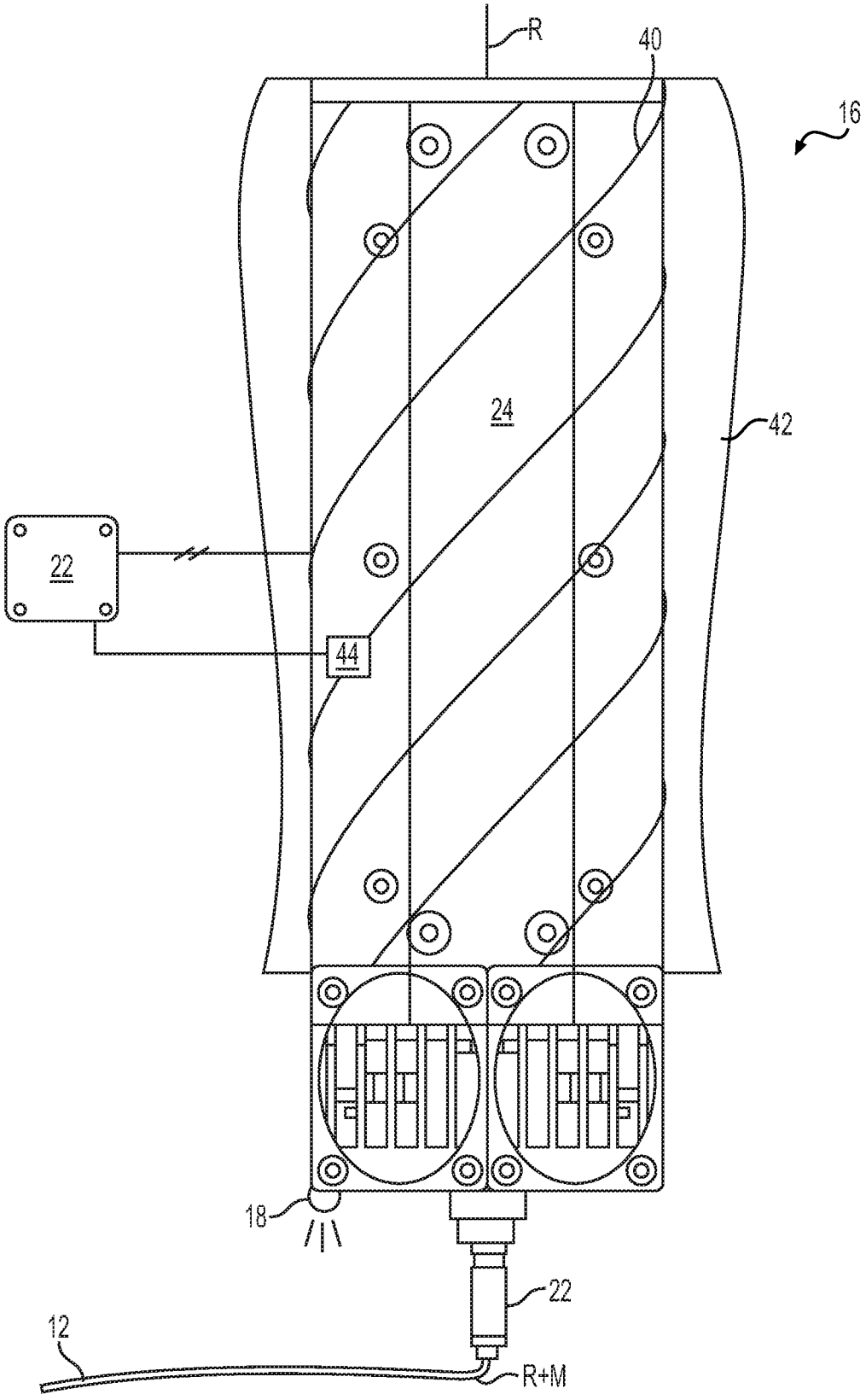

FIG. 2

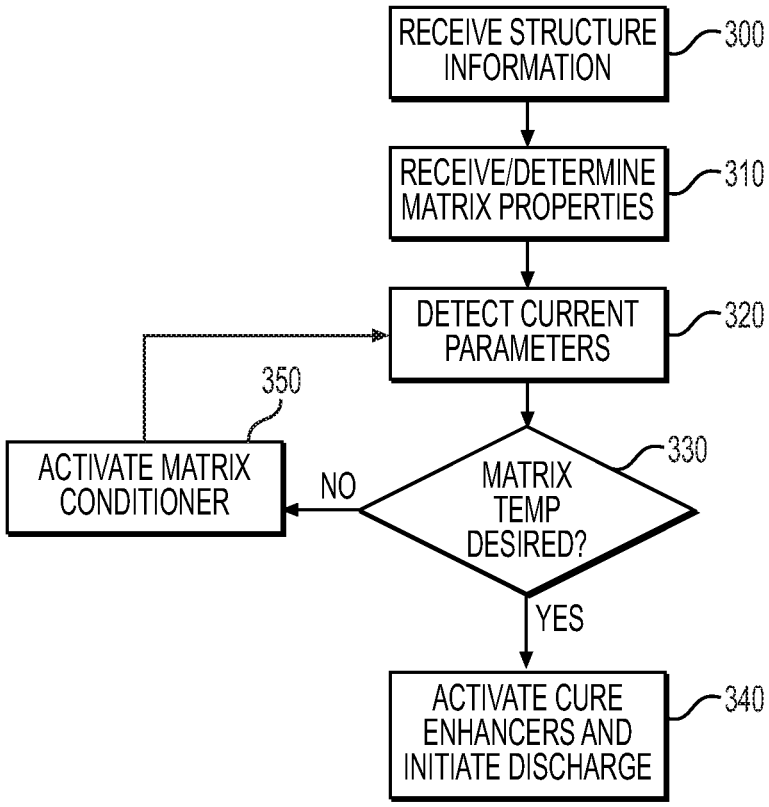
RECEIVE STRUCTURE INFORMATION
300
RECEIVE/DETERMINE MATRIX PROPERTIES
310
DETECT CURRENT PARAMETERS
320
350
ACTIVATE MATRIX CONDITIONER
NO
MATRIX TEMP DESIRED?
330
YES
ACTIVATE CURE ENHANCERS AND INITIATE DISCHARGE
340

FIG. 3

SYSTEM FOR ADDITIVELY MANUFACTURING COMPOSITE STRUCTURE

RELATED APPLICATION

[0001] This application is based on and claims the benefit of priority from U.S. Provisional Application No. 62/797,078 that was filed on Jan. 25, 2019, the contents of which are expressly incorporated herein by reference.

TECHNICAL FIELD

[0002] The present disclosure relates generally to a manufacturing system and, more particularly, to a system for additively manufacturing composite structures.

BACKGROUND

[0003] Continuous fiber 3D printing (a.k.a., CF3D®) involves the use of continuous fibers embedded within a matrix discharging from a moveable print head. The matrix can be a traditional thermoplastic, a powdered metal, a liquid resin (e.g., a UV curable and/or two-part resin), or a combination of any of these and other known matrixes. Upon exiting the print head, a head-mounted cure enhancer (e.g., a UV light, an ultrasonic emitter, a heat source, a catalyst supply, etc.) is activated to initiate and/or complete curing of the matrix. This curing occurs almost immediately, allowing for unsupported structures to be fabricated in free space. When fibers, particularly continuous fibers, are embedded within the structure, a strength of the structure may be multiplied beyond the matrix-dependent strength. An example of this technology is disclosed in U.S. Pat. No. 9,511,543 that issued to Tyler on Dec. 6, 2016 ("the '543 patent").

[0004] Although CF3D® provides for increased strength, compared to manufacturing processes that do not utilize continuous fiber reinforcement, improvements can be made to the structure and/or operation of existing systems. For example, Applicant has found that conditioning the matrix prior to discharge can improve the fabrication process and enhance properties of the resulting structure. The disclosed additive manufacturing system is uniquely configured to provide these improvements and/or to address other issues of the prior art.

SUMMARY

[0005] In one aspect, the present disclosure is directed to a system for additively manufacturing a composite structure. The system may include a support, and a print head operatively connected to and moveable by the support. The print head may be configured to discharge a continuous reinforcement that is at least partially coated in a liquid matrix. The system may also include a cure enhancer connected to the print head and configured to expose the discharge to cure energy to cause the, and a controller in communication with the heater and the cure enhancer. The controller may be configured to selectively activate the heater and the cure enhancer.

[0006] In another aspect, the present disclosure is directed to a method of additively manufacturing a composite structure. The method may include receiving a liquid matrix into a print head, receiving a continuous reinforcement into the print head, and at least. The method may also include selectively discharging the continuous reinforcement and the liquid matrix only when a temperature of the liquid matrix is within a desired range.

[0007] In yet another aspect, the present disclosure is directed to another method of additively manufacturing a composite structure. This method may include receiving a liquid matrix into a print head, receiving a continuous reinforcement into the print head, and at least partially coating the continuous reinforcement with the liquid matrix inside of the print head. The method may also include monitoring a temperature of the liquid matrix inside of the print head, and responsively adjusting the temperature of the liquid matrix. The method may further include selectively discharging the continuous reinforcement and the liquid matrix when a temperature of the liquid matrix is within a desired range, and exposing the liquid matrix after discharge.

BRIEF DESCRIPTION OF THE DRAWINGS

[0008] FIG. **1** is a diagrammatic illustration of an exemplary disclosed additive manufacturing system;

[0009] FIG. **2** is an enlarged isometric illustration of an exemplary disclosed portion of the additive manufacturing system of FIG. **1**; and

[0010] FIG. **3** is a flowchart depicting an exemplary disclosed method that may be performed by the additive manufacturing system of FIG. **1**.

DETAILED DESCRIPTION

[0011] FIG. **1** illustrates an exemplary system **10**, which may be used to manufacture a composite structure **12** having any desired shape. System **10** may include a support **14** and deposition head ("head") **16**. Head **16** may be coupled to and moved by support **14**. In the disclosed embodiment of FIG. **1**, support **14** is a robotic arm capable of moving head **16** in multiple directions during fabrication of structure **12**. Support **14** may alternatively embody a gantry (e.g., an overhead bridge or single-post gantry) or a hybrid gantry/arm also capable of moving head **16** in multiple directions during fabrication of structure **12**. Although support **14** is shown as being capable of 6-axis movements, it is contemplated that support **14** may be capable of moving head **16** in a different manner (e.g., along or around a greater or lesser number of axes). In some embodiments, a drive may mechanically couple head **16** to support **14**, and include components that cooperate to move portions of and/or supply power or materials to head **16**.

[0012] Head **16** may be configured to receive or otherwise contain a matrix (shown as M in FIG. **2**). The matrix may include any type of material (e.g., a liquid resin, such as a zero-volatile organic compound resin, a powdered metal, etc.) that is curable. Exemplary resins include thermosets, single- or multi-part epoxy resins, polyester resins, cationic epoxies, acrylated epoxies, urethanes, esters, thermoplastics, photopolymers, polyepoxides, thiols, alkenes, thiolenes, and more. In one embodiment, the matrix inside head **16** may be pressurized (e.g., negatively and/or positively), for example by an external device (e.g., by an extruder, a pump, etc.—not shown) that is fluidly connected to head **16** via a corresponding conduit (not shown). In another embodiment, however, the pressure may be generated completely inside of head **16** by a similar type of device. In yet other embodiments, the matrix may be gravity-fed into and/or through head **16**. For example, the matrix may be fed into

head **16**, and pushed or pulled out of head **16** along with one or more continuous reinforcements (shown as R in FIG. **2**). In some instances, the matrix inside head **16** may need to be kept cool and/or dark in order to inhibit premature curing or otherwise obtain a desired rate of curing after discharge. In other instances, the matrix may need to be kept warm and/or illuminated for similar reasons. In either situation, head **16** may be specially configured (e.g., insulated, temperature-controlled, shielded, etc.) to provide for these needs.

[0013] The matrix may be used to at least partially coat any number of continuous reinforcements (e.g., separate fibers, tows, rovings, socks, and/or sheets of continuous material) and, together with the reinforcements, make up a portion (e.g., a wall) of composite structure **12**. The reinforcements may be stored within or otherwise passed through head **16**. When multiple reinforcements are simultaneously used, the reinforcements may be of the same material composition and have the same sizing and cross-sectional shape (e.g., circular, square, rectangular, etc.), or a different material composition with different sizing and/or cross-sectional shapes. The reinforcements may include, for example, carbon fibers, vegetable fibers, wood fibers, mineral fibers, glass fibers, plastic fibers, metallic wires, optical tubes, etc. It should be noted that the term "reinforcement" is meant to encompass both structural and non-structural (e.g., functional) types of continuous materials that are at least partially encased in the matrix discharging from head **16**.

[0014] The reinforcements may be exposed to (e.g., at least partially coated with) the matrix while the reinforcements are inside head **16**, while the reinforcements are being passed to head **16**, and/or while the reinforcements are discharging from head **16**. The matrix, dry (e.g., unimpregnated) reinforcements, and/or reinforcements that are already exposed to the matrix (e.g., pre-impregnated reinforcements) may be transported into head **16** in any manner apparent to one skilled in the art. In some embodiments, a filler material (e.g., chopped fibers, nano particles or tubes, etc.) may be mixed with the matrix before and/or after the matrix coats the continuous reinforcements.

[0015] One or more cure enhancers (e.g., a UV light, an ultrasonic emitter, a laser, a heater, a catalyst dispenser, etc.) **18** may be mounted proximate (e.g., within, on, and/or adjacent) head **16** and configured to enhance a cure rate and/or quality of the matrix as it is discharged from head **16**. Cure enhancer **18** may be controlled to selectively expose portions of structure **12** to energy (e.g., UV light, electromagnetic radiation, vibrations, heat, a chemical catalyst, etc.) during material discharge and the formation of structure **12**. The energy may trigger a chemical reaction to occur within the matrix, increase a rate of the chemical reaction, sinter the matrix, harden the matrix, solidify the matrix, polymerize the matrix, or otherwise cause the matrix to cure as it discharges from head **16**. The amount of energy produced by cure enhancer **18** may be sufficient to cure the matrix before structure **12** axially grows more than a predetermined length away from head **16**. In one embodiment, structure **12** is completely cured before the axial growth length becomes equal to an external diameter of the matrix-coated reinforcement.

[0016] The matrix and/or reinforcement may be discharged from head **16** via at least two different modes of operation. In a first mode of operation, the matrix and/or reinforcement are extruded (e.g., pushed under pressure and/or mechanical force) from head **16** as head **16** is moved by support **14** to create features of structure **12**. In a second mode of operation, at least the reinforcement is pulled from head **16**, such that a tensile stress is created in the reinforcement during discharge. In this mode of operation, the matrix may cling to the reinforcement and thereby also be pulled from head **16** along with the reinforcement, and/or the matrix may be discharged from head **16** under pressure along with the pulled reinforcement. In the second mode of operation, where the matrix is being pulled from head **16** with the reinforcement, the resulting tension in the reinforcement may increase a strength of structure **12** (e.g., by aligning the reinforcements, inhibiting buckling, etc.) after curing of the matrix, while also allowing for a greater length of unsupported structure **12** to have a straighter trajectory. That is, the tension in the reinforcement remaining after curing of the matrix may act against the force of gravity (e.g., directly and/or indirectly by creating moments that oppose gravity) to provide support for structure **12**.

[0017] The reinforcement may be pulled from head **16** as a result of head **16** being moved by support **14** away from an anchor point **20**. In particular, at the start of structure formation, a length of matrix-impregnated reinforcement may be pulled and/or pushed from head **16**, deposited onto anchor point **20**, and cured, such that the discharged material adheres (or is otherwise coupled) to anchor point **20**. Thereafter, head **16** may be moved away from anchor point **20**, and the relative movement may cause the reinforcement to be pulled from head **16**. It should be noted that the movement of reinforcement through head **16** could be assisted via internal feed mechanisms, if desired. However, the discharge rate of reinforcement from head **16** may primarily be the result of relative movement between head **16** and anchor point **20**, such that tension is created within the reinforcement. As discussed above, anchor point **20** could be moved away from head **16** instead of or in addition to head **16** being moved away from anchor point **20**.

[0018] As can be seen in FIG. **1**, head **16** may include, among other things, an outlet **22** and a matrix reservoir **24** located upstream of outlet **22**. In this example, outlet **22** is a single-channel nozzle configured to discharge composite material having a generally circular, tubular, or rectangular cross-section. The configuration of head **16**, however, may allow outlet **22** to be swapped out for another outlet (not shown) that discharges composite material having a different shape (e.g., a flat or sheet-like cross-section, a multi-track cross-section, etc.). Fibers, tubes, and/or other reinforcements may pass through matrix reservoir **24** and be wetted (e.g., at least partially coated and/or fully saturated) with matrix prior to discharge.

[0019] A controller **26** may be provided and communicatively coupled with support **14** and head **16**. Each controller **26** may embody a single processor or multiple processors that are programmed and/or otherwise configured to control an operation of system **10**. Controller **26** may include one or more general or special purpose processors or microprocessors. Controller **26** may further include or be associated with a memory for storing data such as, for example, design limits, performance characteristics, operational instructions, tool paths, and corresponding parameters of each component of system **10**. Various other known circuits may be associated with controller **26**, including power supply circuitry, signal-conditioning circuitry, solenoid driver circuitry, communication circuitry, and other appropriate circuitry. More-

over, controller **26** may be capable of communicating with other components of system **10** via wired and/or wireless transmission.

[0020] One or more maps may be stored in the memory of controller **26** and used during fabrication of structure **12**. Each of these maps may include a collection of data in the form of lookup tables, graphs, and/or equations. In the disclosed embodiment, the maps may be used by controller **26** to determine the movements of head **16** required to produce desired geometry (e.g., size, shape, material composition, performance parameters, and/or contour) of structure **12**, and to regulate operation of cure enhancer(s) **18** and/or other related components in coordination with the movements.

[0021] It has been found that the material discharged by head **16** may have characteristics, which are at least partially dependent on how the material is processed by head **16**. For example, a glass transition temperature (Tg) of the material can be affected by a temperature achieved prior to discharge and/or during curing subsequent to discharge from outlet **22**. In particular, a higher temperature achieved within the matrix during curing generally results in a higher Tg of the finished structure **12**. Accordingly, it may be beneficial to selectively increase the matrix temperature to a level higher than can be achieved solely via cure enhancer(s) **20** and/or resulting normally from chemical reactions occurring within the matrix. Care must be taken, however, to avoid premature curing (e.g., curing prior to discharge from outlet **22**) caused by the elevated temperatures and to ensure consistent and even heating throughout the matrix.

[0022] It has also been found that preheating the matrix (i.e., heating the matrix to an elevated temperature just below a cure initiation temperature at which molecules begin to cross-bond with each other) may reduce an amount of energy exposure required outside of head **16** to initiate and/or complete through-curing of the matrix. This may be particularly helpful, for example, in applications where it is difficult to fully penetrate the reinforcements (e.g., opaque reinforcements such as carbon) with the cure energy.

[0023] In the embodiment of FIG. **2**, the matrix within reservoir **24** or otherwise passing through head **16** may be selectively preheated prior to discharge, so as to increase the temperature achieved inside the matrix during curing. The preheating may be facilitated by way of a heater **40**. In the disclosed example, heater **40** is an electric coil placed in a vicinity of head **16** (e.g., wrapped around matrix reservoir **24** and/or outlet **22**). It is contemplated, however, that heater **40** could alternatively be placed inside of head **16** or at some location upstream of head **16**. For example, heater **40** could embody a cartridge heater embedded within a wall of matrix reservoir **24** and/or outlet **22**, or an electrode heater in direct fluid contact with the matrix (e.g., inside of reservoir **24**). Other heater configurations are also contemplated.

[0024] Heater **40** may be regulated (e.g., selectively energized by controller **26**) to increase the temperature of the matrix inside head **16** to about 80-95% of a threshold temperature that initiates or otherwise causes curing of the matrix (e.g., the "kick-off" temperature). With this preheating, cure enhancers **18** may more easily trigger cure initiation after discharge (e.g., via additional direct heating and/or via UV reactions that cause further heating), and the matrix temperature achieved during the reaction may be higher than otherwise possible. It is contemplated that the kickoff temperature of a particular matrix could be selectively lowered (e.g., via one or more thermal initiators), in addition to preheating the matrix, such that an even lower level of energy exposure from cure enhancer(s) **18** may be required.

[0025] In the embodiment of FIG. **2**, one or more portions of head **16** may be provided with an insulating jacket **42**. Jacket **42** may embody any type of insulating layer or material applied to any portion of head **16**, with the primary purpose being to reduce heat transfer with (e.g., loss to) the environment (and/or other portions of head **16**) and thereby facilitate greater accuracy in matrix temperature control. It is contemplated that a sensor **44** could be associated with reservoir **24**, if desired, and used to provide feedback control signals associated with the matrix temperature. Controller **26** may be configured to receive these signals and responsively adjust current levels passing through heater **40** alone and/or in combination with adjustments to operation of cure enhancer(s) **18**.

[0026] FIG. **3** is a flowchart depicting an exemplary method that may be implemented by system **10** and regulated by controller **26** during fabrication of structure **12**. FIG. **3** will be discussed in more detail in the following section to further illustrate the disclosed concepts.

INDUSTRIAL APPLICABILITY

[0027] The disclosed system may be used to manufacture composite structures having any desired cross-sectional shape and length. The composite structures may include any number of different fibers of the same or different types and of the same or different diameters, and any number of different matrixes of the same or different makeup. Operation of system **10** will now be described in detail.

[0028] At a start of a manufacturing event, information regarding a desired structure **12** may be loaded into system **10** (e.g., into controller **26** that is responsible for regulating operations of support **14** and/or head **16**) (Step **300**). This information may include, among other things, a size (e.g., diameter, wall thickness, length, etc.), a contour (e.g., a trajectory), surface features (e.g., ridge size, location, thickness, length; flange size, location, thickness, length; etc.), connection geometry (e.g., locations and sizes of couplings, tees, splices, etc.), reinforcement selection, matrix selection, etc. It should be noted that this information may alternatively or additionally be loaded into system **10** at different times and/or continuously during the manufacturing event, if desired. Based on the component information, one or more different reinforcements and/or matrix materials may be installed and/or continuously supplied into system **10**.

[0029] To install the reinforcements, individual fibers, tows, and/or ribbons may be passed through matrix reservoir **24** and outlet **22**. In some embodiments, the reinforcements may also need to be connected to a pulling machine (not shown) and/or to a mounting fixture (e.g., to anchor point **20**). Installation of the matrix material may include filling head **16** (e.g., reservoir **24**) and/or coupling of an extruder (not shown) to head **16**.

[0030] At the same time as or after completion of Step **300**, controller **26** (or a software module that forms a portion of system **10**) may receive and/or determine operational properties of the selected matrix (Step **310**). These properties may include, among other things, a desired glass transition temperature for structure **12** and/or a temperature that should be achieved within head **16** via heater **40** alone and/or a temperature achieved during curing via a combination of heater **40** and cure enhancer(s) **18** that will produce the

desired glass transition temperature. These properties may be stored, for example, within the memory of controller **26** as one or more relationship maps that can be referenced by controller **26** during operation of system **10**.

[0031] After completion of Steps **300** and **310**, controller **26** may monitor a temperature of the matrix (Step **320**), and determine if the temperature is within a desired range suitable for material discharge from head **16** (Step **330**). This temperature may include the temperature of matrix within head **16** induced by heater **40** alone or a maximum temperature of the matrix achieved via energy received from both heater **40** and cure enhancer(s) **18**. In one embodiment, the temperature of the matrix may be determined, at least in part, based on signals generated by sensor **44**. For example, the temperature may correspond directly to the signals. Alternatively, the temperature may correspond to an amount of energy exposure from heater **40** and/or cure enhancer(s) **18**, as indicated by levels of current supplied to these devices and regulated by controller **26**.

[0032] When the temperature is within the desired range (Step **330**: Y), controller **26** may initiate discharge of material from head **16** and the fabrication of structure **12** (Step **340**). For example, the reinforcements may be pulled and/or pushed along with the matrix material from head **16**. Support **14** may also selectively move head **16** and/or anchor point **20** in a desired manner, such that an axis of the resulting structure **12** follows a desired three-dimensional trajectory.

[0033] However, when controller **26** determines at Step **330** that the temperature of the matrix is not within the desired range (Step **330**: N), controller **26** may selectively adjust operation of heater **40** and/or cure enhancer(s) **18** to bring the matrix temperature into the desired range (Step **350**). The desired range may include, for example about (e.g., within engineering tolerances) 80-95% of the kickoff temperature (e.g., the temperature at which self-supported curing occurs) of the matrix. Control may then return to Step **320**.

[0034] Controller **26** may periodically or continuously monitor and selectively adjust the matrix temperature during fabrication of structure **12**. Once structure **12** has grown to a desired length, structure **12** may be severed from system **10**.

[0035] It will be apparent to those skilled in the art that various modifications and variations can be made to the disclosed system. Other embodiments will be apparent to those skilled in the art from consideration of the specification and practice of the disclosed system. It is intended that the specification and examples be considered as exemplary only, with a true scope being indicated by the following claims and their equivalents.

What is claimed is:

1. An additive manufacturing system, comprising:

a support;

a print head operatively connected to and moveable by the support, the print head configured to discharge a continuous reinforcement that is at least partially coated in a liquid matrix;

a cure enhancer connected to the print head and configured to expose the discharge to cure energy to cause the liquid matrix to at least partially polymerize;

a heater configured to warm the liquid matrix inside of the print head; and

a controller in communication with the heater and the cure enhancer, the controller being configured to selectively activate the heater and the cure enhancer.

2. The additive manufacturing system of claim **1**, wherein the controller is configured to selectively activate at least one of the heater and the cure enhancer based on a desired glass transition temperature of the liquid matrix within a fabricated structure.

3. The additive manufacturing system of claim **2**, further including a sensor configured to generate a signal indicative of a temperature of the liquid matrix inside of the print head, wherein the controller is configured to activate the at least one of the heater and the cure enhancer based on the signal.

4. The additive manufacturing system of claim **1**, further including an insulating jacket associated with the print head to reduce heat loss from the liquid matrix.

5. The additive manufacturing system of claim **3**, wherein the controller is configured to cause the print head to discharge material only when the signal indicates an internal temperature of the liquid matrix within a desired range.

6. A method of additively manufacturing a composite structure, comprising:

receiving a liquid matrix into a print head;

receiving a continuous reinforcement into the print head;

at least partially coating the continuous reinforcement with the liquid matrix inside of the print head; and

selectively discharging the continuous reinforcement and the liquid matrix only when a temperature of the liquid matrix is within a desired range.

7. The method of claim **6**, further including generating a signal indicative of the temperature of the liquid matrix, wherein selectively discharging the continuous reinforcement and the liquid matrix includes selectively discharging the continuous reinforcement and the liquid matrix only when the signal indicates that the temperature of the liquid matrix is within the desired range.

8. The method of claim **6**, further including selectively conditioning the liquid matrix when the temperature of the liquid matrix is outside of the desired range.

9. The method of claim **8**, wherein selectively conditioning includes heating the liquid matrix inside of the print head.

10. The method of claim **9**, further including exposing the liquid matrix to a cure energy after discharge from the print head.

11. The method of claim **10**, wherein selectively conditioning further includes adjusting an amount of energy directed to the liquid matrix after discharge from the print head.

12. The method of claim **9**, wherein heating the liquid matrix includes heating the liquid matrix to about 80-95% of a kickoff temperature of the liquid matrix.

13. The method of claim **9**, wherein heating the liquid matrix inside of the print head increases a glass transition temperature of the composite structure.

14. The method of claim **6**, wherein the desired range is specific to the liquid matrix.

15. A method of additively manufacturing a composite structure, comprising:

receiving a liquid matrix into a print head;

receiving a continuous reinforcement into the print head;

at least partially coating the continuous reinforcement with the liquid matrix inside of the print head;

monitoring a temperature of the liquid matrix inside of the print head;

responsively adjusting the temperature of the liquid matrix;

selectively discharging the continuous reinforcement and the liquid matrix when a temperature of the liquid matrix is within a desired range; and

exposing the liquid matrix to a cure energy after discharge.

16. The method of claim **15**, further including generating a signal indicative of the temperature of the liquid matrix, wherein selectively discharging the continuous reinforcement and the liquid matrix includes selectively discharging the continuous reinforcement and the liquid matrix only when the signal indicates that the temperature of the liquid matrix is within the desired range.

17. The method of claim **15**, wherein selectively conditioning includes heating the liquid matrix inside of the print head.

18. The method of claim **17**, wherein selectively conditioning further includes adjusting the exposing of the liquid matrix to energy after discharge from the print head.

19. The method of claim **18**, wherein heating the liquid matrix includes heating the liquid matrix to 80-95% of a kickoff temperature of the liquid matrix.

20. The method of claim **19**, wherein heating the liquid matrix inside of the print head increases a glass transition temperature of the composite structure.

* * * * *