D. E. FALVEY.

PORTABLE TURN TABLE FOR RAILWAYS.

APPLICATION FILED OCT. 14, 1912.

1,068,492.

Patented July 29, 1913.

4 SHEETS—SHEET 1.

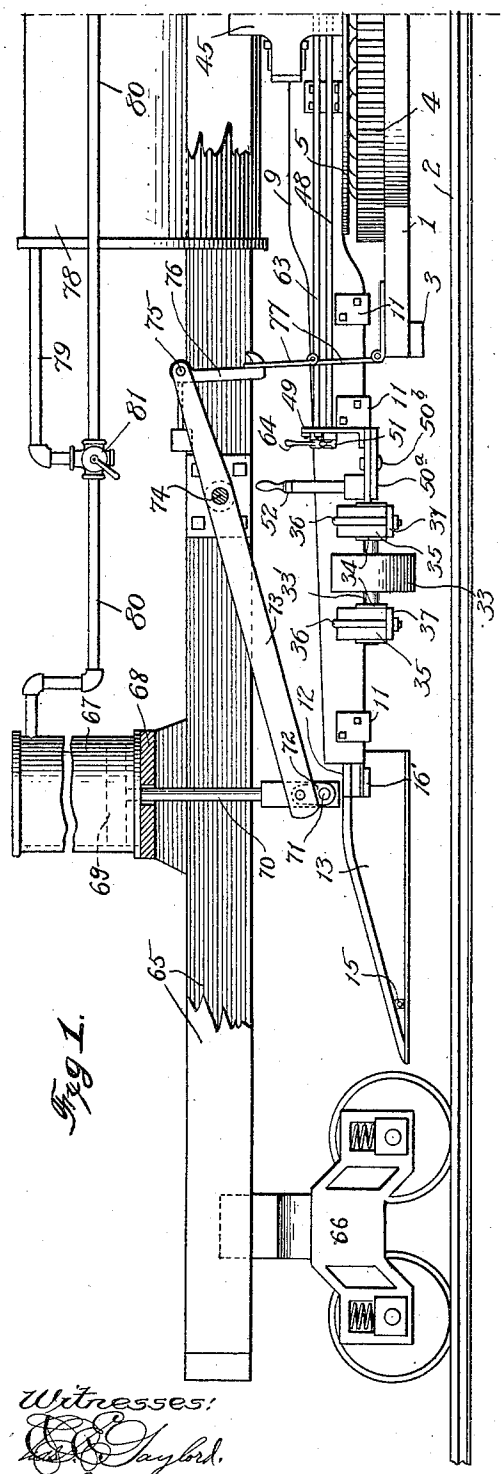

Fig. 1.

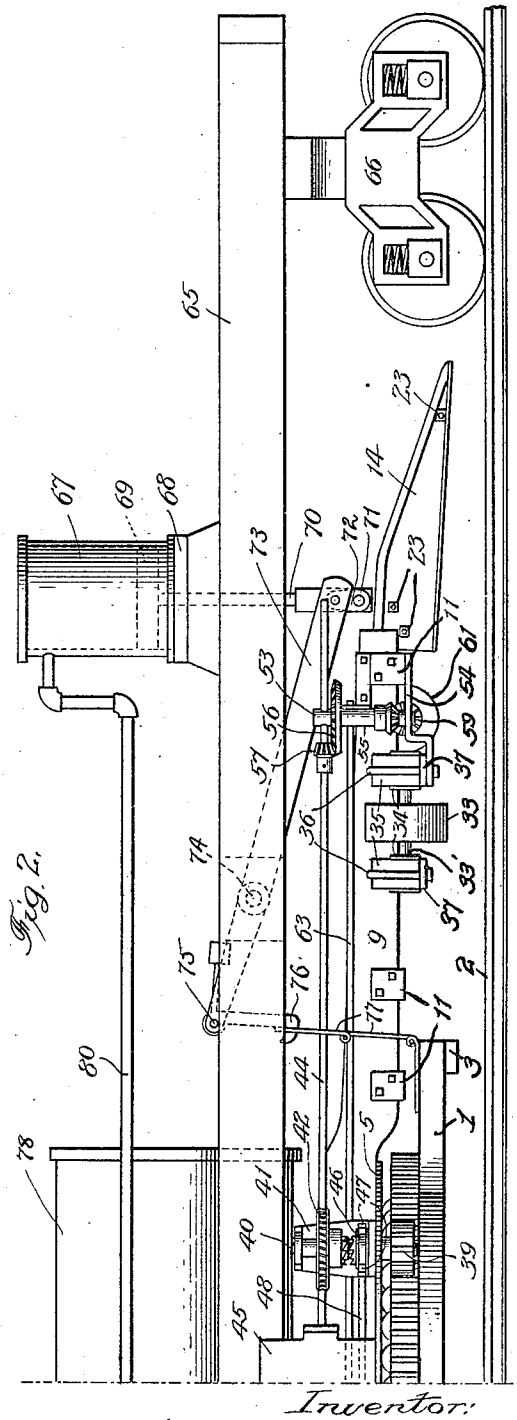

Fig. 2.

Witnesses:
E. C. Taylord.
Chas. H. Buell

Inventor:
Daniel E. Falvey
By Peirce, Fisher & Clapp
Attys.

COLUMBIA PLANOGRAPH CO., WASHINGTON, D. C.

D. E. FALVEY.

PORTABLE TURN TABLE FOR RAILWAYS.

APPLICATION FILED OCT. 14, 1912.

1,068,492.

Patented July 29, 1913.

4 SHEETS—SHEET 2.

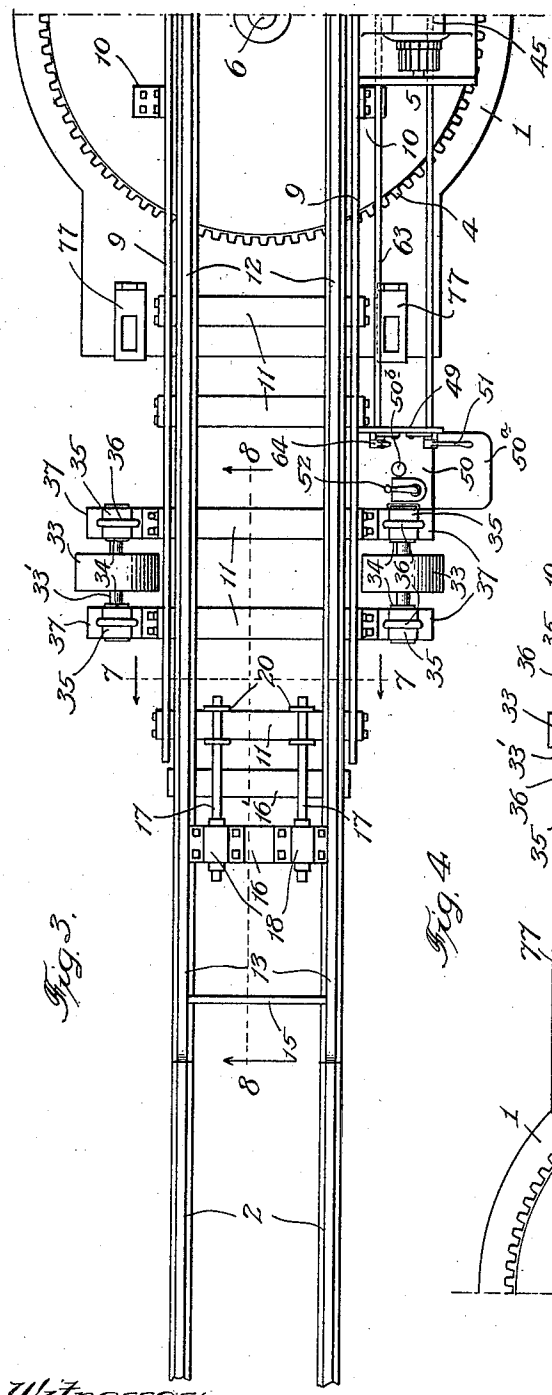

Fig. 3.

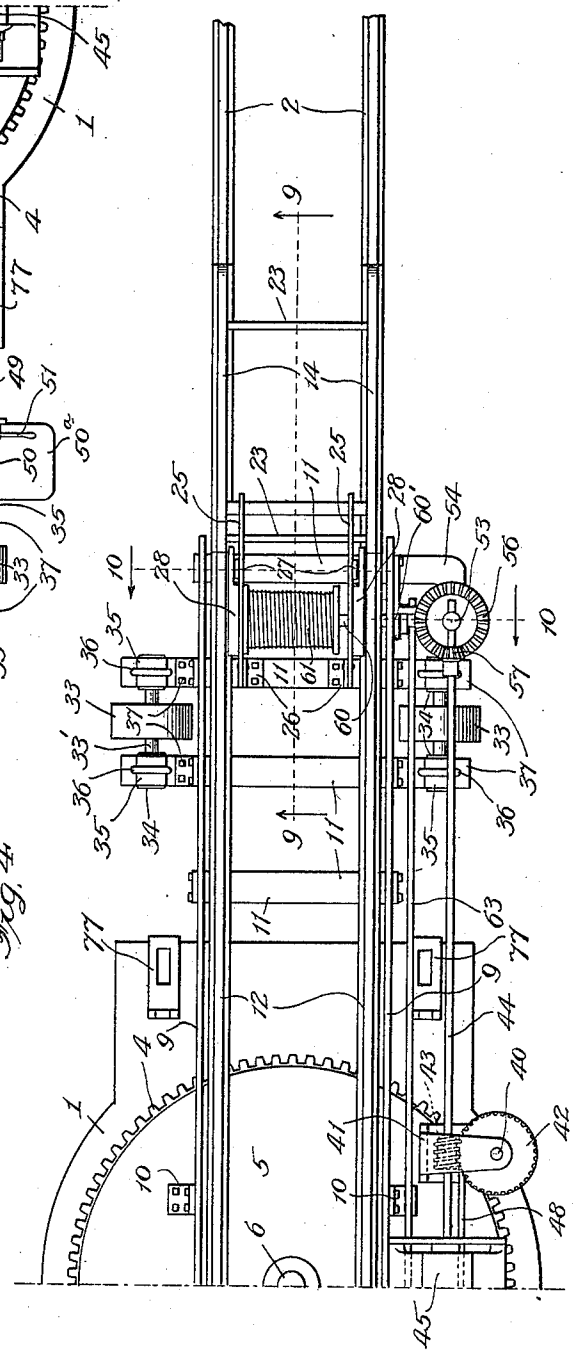

Fig. 4.

Witnesses:
E. C. Gaylord.
Chas. H. Buell.

Inventor:
Daniel E. Falvey
By Pierce, Fisher & Clapp
Attys.

COLUMBIA PLANOGRAPH CO., WASHINGTON, D. C.

D. E. FALVEY.

PORTABLE TURN TABLE FOR RAILWAYS.

APPLICATION FILED OCT. 14, 1912.

1,068,492.

Patented July 29, 1913.

4 SHEETS—SHEET 3.

Fig. 5.

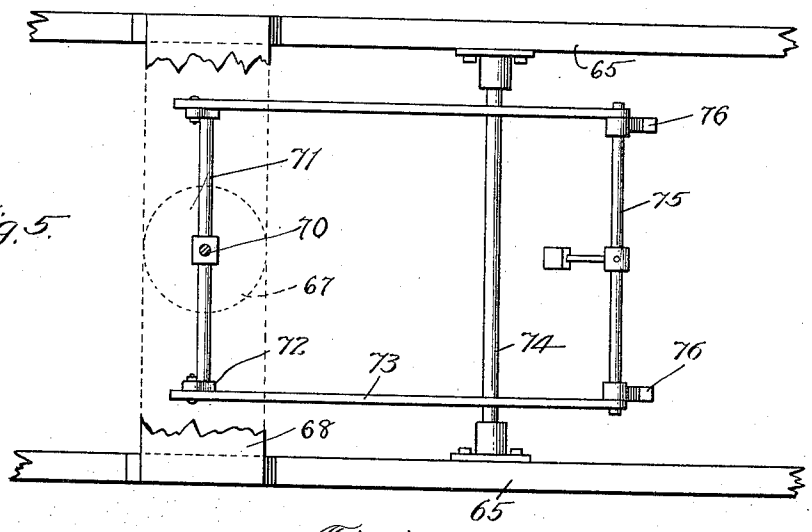

Fig. 6.

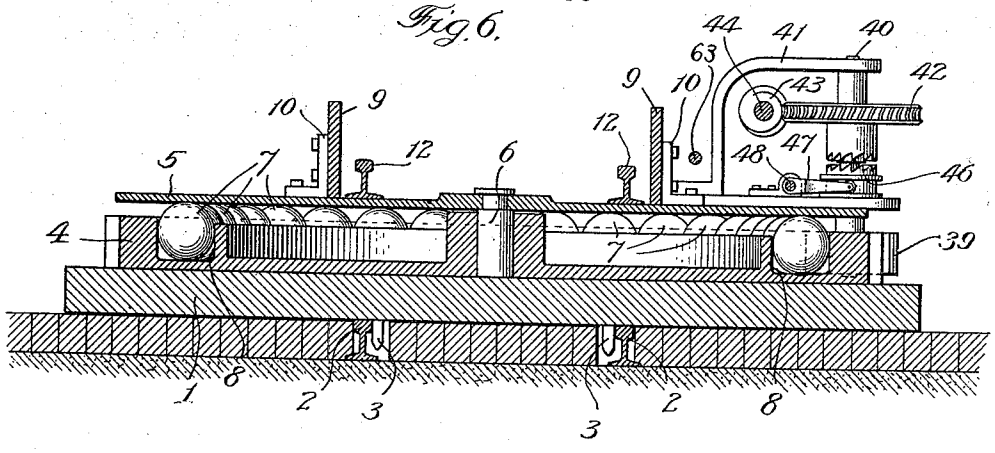

Fig. 7.

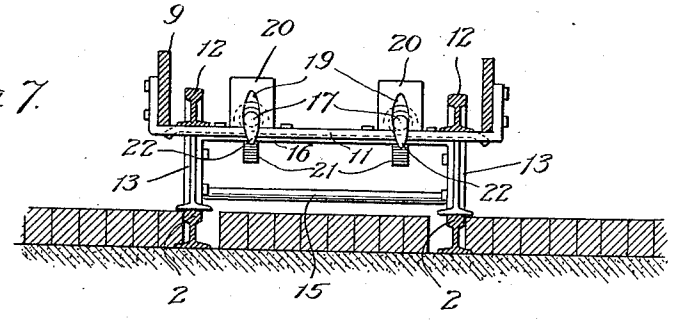

Witnesses:

Chas. H. Bueil.

Inventor:

Daniel E. Falvey

By Pierce, Fisher & Clapp

Attys.

COLUMBIA PLANOGRAPH CO., WASHINGTON, D. C.

D. E. FALVEY.

PORTABLE TURN TABLE FOR RAILWAYS.

APPLICATION FILED OCT. 14, 1912.

1,068,492.

Patented July 29, 1913.

4 SHEETS—SHEET 4.

Fig. 8.

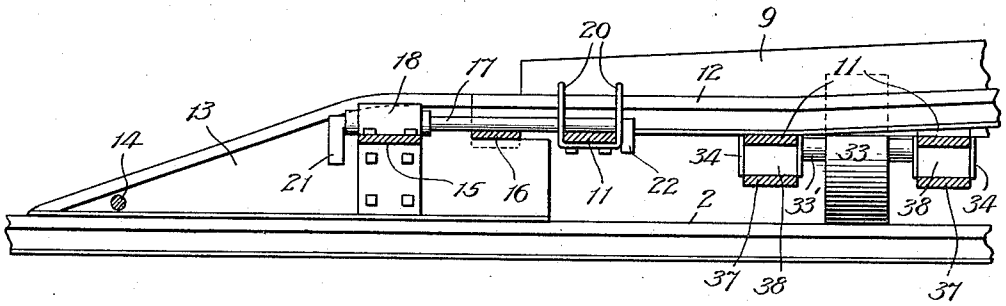

Fig. 9.

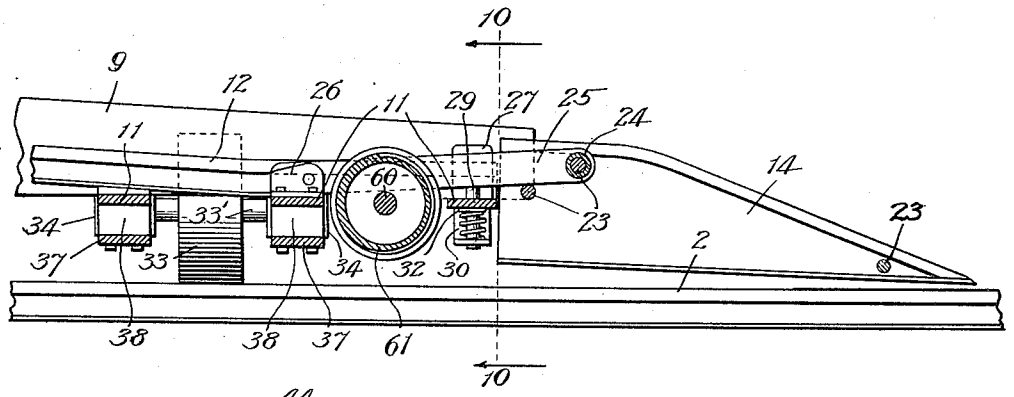

Fig. 10.

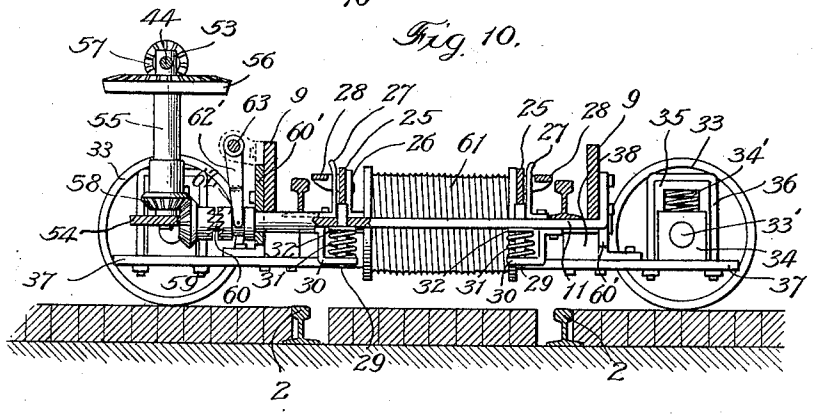

Witnesses:

Chas. H. Bueil.

Inventor:

Daniel E. Falvey

By Pierce, Fisher & Clapp

Attys.

COLUMBIA PLANOGRAPH CO., WASHINGTON, D. C.

UNITED STATES PATENT OFFICE.

DANIEL E. FALVEY, OF DETROIT, MICHIGAN.

PORTABLE TURN-TABLE FOR RAILWAYS.

1,068,492. Specification of Letters Patent. Patented July 29, 1913.

Application filed October 14, 1912. Serial No. 725,742.

To all whom it may concern:

Be it known that I, DANIEL E. FALVEY, a citizen of the United States, and a resident of Detroit, county of Wayne, and State of Michigan, have invented certain new and useful Improvements in Portable Turn-Tables for Railways, of which the following is a full, clear, and exact description.

The invention relates to portable turn tables for street and other railways and seeks to provide an improved construction of turn table which can be transported from place to place along the track, and which is so constructed that a car can be drawn from the track rails onto the turn table.

The invention also seeks to provide a car for transporting the turn table and which preferably has means for raising and lowering the same to and from the track.

It is often desirable to remove a car from the main track onto a short track which is located on one side of the main track or in a building on one side of the street, but ordinarily this can only be accomplished by connecting such side track to the main track by means of a switch. The railway companies, however, cannot afford to install a switch which is only infrequently used, because it is a source of danger and costly to maintain. The present portable turn table provides means by which a car can be transferred from the main rails to a short track at the side without the use of a switch.

The invention consists in the features of improvement hereinafter set forth, illustrated in the preferred form in the accompanying drawings and more particularly pointed out in the appended claims.

In the drawings, Figure 1 is a view in side elevation of the left hand portion of the improved turn table and the car for transporting the same, with parts shown in section. Fig. 2 is a similar view of the right hand portion. In Figs. 1 and 2, the turn table is shown elevated ready for transportation along the track. Figs. 3 and 4 are plan views of the left and right hand portions, respectively, of the portable turn table. Fig. 5 is a detail plan view of a portion of the mechanism on the car for elevating the turn table. Fig. 6 is a cross-section through the center of the turn table. Fig. 7 is a cross-section on the line 7—7 of Fig. 3. Fig. 8 is a partial longitudinal section on the line 8—8 of Fig. 3. Fig. 9 is a partial longitudinal section on the line 9—9 of Fig. 4 and Fig. 10 is a cross-section on the line 10—10 of Fig. 4.

The portable turn table mechanism is supported upon a base member 1 which is preferably adapted to rest upon the rails 2 of the track and interlock therewith. The base is provided at its ends and on its lower surface with depending lugs 3 (see Figs. 1, 2 and 6), which engage the inner sides of the rails when the base member is in engagement therewith to hold the base member securely in position. The base member 1 carries a large spur gear or bull wheel 4. The turn table proper comprises a platform 5 which is pivotally mounted on the bull wheel 4 by a central king pin 6. Near its periphery the platform rests upon a series of balls or rollers 7 arranged within a raceway 8 in the bull wheel 4. Longitudinally extending frame bars 9 are secured to the platform 5 by angle pieces 10. The end portion of the side bars 9 extend beyond the platform 5 and are bent downwardly below the level thereof, as shown in Figs. 1 and 2. These end portions are connected by transverse bars 11. The turn table tracks 12 are supported upon the platform 5 and the cross bars 11 and are arranged inside of and adjacent the side bars 9. Two pairs of triangular shoes 13 and 14 are provided for connecting the ends of the turn table rails 12 with the track rails 2. The shoes 13 at one end are connected at their outer ends by a cross rod 15 and at their inner ends by a pair of cross bars 16 and 16′. These shoes are preferably detachably connected to the end of the turn table by a pair of bolts 17. These bolts extend through sleeves 18 fixed to the cross bar 16 and the inner ends of the bolts extend through openings 19 in a pair of U-shaped pieces 20 which are fixed to the end cross bar 11 of the turn table. At their outer ends the bolts are provided with crank handles 21 by which they may be rotated and moved longitudinally. The bolts are provided with offset lugs 22 at their inner ends. The holes 19 in the pieces 20 are elongated, as most clearly shown in Fig. 7, so that the offset lugs 22 can be passed therethrough and then turned down, as shown in the drawings, to securely but detachably connect the shoes 12 to the end of the turn table.

The shoes 14 at the opposite end of the turn table tracks are connected by three cross bolts 23. A sleeve 24 is mounted upon

one of the cross rods 23 at the inner ends of the shoes. A pair of arms 25 mounted on this sleeve are pivoted at their inner ends upons brackets 26 fixed to one of the cross bars 11 adjacent the outer end of the turn table rails 12. Upright guide pieces 27 are fixed to the outer end cross bar 11 and engage the outer faces of the arms 25. The latter are also preferably provided (see Fig. 4) with parts 28 having extensions which engage the outer faces of the guide 27. The arms 25 rest upon a pair of pins 29 (see Fig. 9) which extend upwardly through openings in the cross bar 11 and downwardly through depending brackets 30. Springs 31 surround the pins 29 and extend between the lower portions of the brackets 30 and collars 32 fixed to the pins. When the turn table is lowered so that its base member engages the track rails 2, as shown in Fig. 6, the shoes 13 at one end rest upon the track rails 2, as shown in Fig. 8, and these shoes are disconnected when the turn table is shifted to bring the rails 12 thereof in line with the rails of the short track at the side of the main track. The inner ends of the shoes 14 abut against the adjacent end cross bar 11 and the spring held pins 29 normally uphold these shoes so that they do not rest upon the main rails 2 when the turn table is in operative position, so that these shoes need not be disconnected when the turn table is rotated. The shoes 13 are, however, held in position with their outer ends closely adjacent the rails 2 and with their inner ends only slightly above the turn table rails 12, so that a car can pass over the shoes from the track rails 2 onto the turn table rails 12 or in reverse direction, the weight of the car, of course, being sufficient to depress the shoes 13 against the tension of the springs 31 and so bring the shoes down solidly onto the track rails 2 with their inner ends in line with the turn table rails 12. When a car passes from the turn table, the wheel flanges first engage the parts 28 of the arms 25 and depress the shoes 14, so that the tread of the wheels will not strike the inner ends of the shoes.

The form of the invention illustrated is particularly designed for use with street railways in which the tread surfaces of the main track rails are level with the surface of the street. Preferably, the projecting end portions of the turn table are provided with rollers which are arranged to engage the surface of the street when the turn table is in operation. These rollers or wheels 33 are carried on shafts 33′, the ends of which are journaled in boxes 34 (see Figs. 9 and 10). These boxes are arranged in vertical guides 35 which are secured by U-bolts 36 to the projecting ends of a pair of cross bars 37. These cross bars extend beneath and are connected to two of the transverse bars 11 and are spaced therefrom by intervening blocks 38. Springs 34′ are interposed between the boxes 34 and the upper ends of the guides 35.

The turn table is rotated relatively to the base member by a pinion 39 (see Fig. 2) which meshes with the large spur gear or bull wheel 4. This pinion is fixed to the lower end of a shaft 40 which is journaled in an upright bracket or frame 41 on one side of the platform 5. A worm wheel 42, loosely mounted on the shaft, engages a worm 43 on the main shaft 44 of a small electric motor 45 which is mounted on the turn table platform 5. A clutch 46 (see Figs. 2 and 6) on the shaft 40 is arranged to connect and disconnect the shaft and the worm wheel 42. This clutch is operated by a fork 47 on a shaft 48 that is journaled in suitable bearings on the platform 5. One end of the clutch shaft 48 extends through an upright 49 which is fixed to the turn table adjacent a horizontal platform 50 upon which the operator stands, and the adjacent end of the shaft is provided with a handle 51 by which the clutch may be shifted. A controller 52 for the electric motor is also mounted on the platform 50. This platform is provided with an extension 50^a pivoted thereto at 50^b so that it may be swung inwardly to the right out of the way.

The motor shaft 44 is extended beyond the worm wheel 43 and its outer end extends through the upper end of a post 53 which extends upwardly from a bracket 54 (see Figs. 2, 4 and 10). This bracket is fixed to the end of the adjacent side bar 9 and to the end of one of the adjacent cross bars 37. A sleeve 55 is journaled on the post 53 and carries a beveled gear 56 at its outer end which meshes with a beveled pinion 57 on the motor shaft. At its lower end, the sleeve 55 is provided with a beveled pinion 58 which meshes with a beveled pinion 59 that is loosely mounted upon a shaft 60. This shaft is journaled in pieces 60′ fixed to the side bars 9 and carries a drum 61. The beveled pinion 59 and the shaft 60 are connected and disconnected by a clutch 62 which is shifted by a fork 62′ on a shaft 63. This shaft is journaled in suitable bearings on the adjacent side bar 9 and is extended along the turn table to the operator's platform 50. This end of the clutch shaft 63 is provided with a handle 64 (see Fig. 3).

The turn table is transported from place to place along the track rails 2 by a car having means for raising and lowering the same. The body of this car comprising the connected side sills 65 supported on bogie trucks 66, is longer than an ordinary freight car and is longer than the turn table so that the latter can be carried beneath the platform or floor of the car and between the trucks 66. The car is provided with means

for raising and lowering the portable platform and which means preferably comprises a pair of vertical cylinders 67 mounted on cross pieces 68 near the ends of the car and having pistons 69, the rods 70 of which are connected to the suitable devices for raising and lowering the turn table. In the form shown, the lower end of each piston rod 70 is connected to a cross bar 71 (see Figs. 1 and 5). The ends of this cross bar are connected by short links 72 to a pair of levers 73 pivotally mounted between their ends upon a transverse shaft 74 which extends between the sills 65 of the car. A shaft 75 is journaled in the inner ends of the arms or levers 73 and carries a pair of hooks 76 which are arranged to engage links or chains 77 connected to the ends of the base member 1 whereon the turn table is mounted. The car is provided with a tank 78 for compressed air which is connected by a pipe 79 and branch pipes 80 to the upper ends of the cylinders 67. A suitable valve 81 is provided for connecting the cylinders to the supply tank or to the atmosphere, so that air under pressure can be admitted to or exhausted from the upper ends of the cylinders 67.

In transporting the platform from place to place, the pairs of hooks 76 at each end of the car are connected by the links or chains 77 to the base member 1 and air under pressure is maintained in the upper ends of the cylinders 67 to hold the turn table in the elevated position shown in Figs. 1 and 2. The turn table can then be readily transported to the place where it is to be used. Then by exhausting the air from the upper ends of the cylinders, the turn table is lowered onto the track rails 2 and the lugs 3 on the base member interlock with the track rails, as shown in Fig. 6. The hooks 76 and links or chains 77 are then disconnected and the transportation car for the platform is then moved out of the way in one or the other direction, one of its trucks, of course, passing over the shoes 13 and 14 and over the turn table rails 12. The car to be shifted from the main track onto the short side track is then run onto the turn table rails which are long enough to carry an ordinary freight car. The motor shaft 44 is then connected to the shaft 40 by the clutch 46 and the motor 45 is placed in operation to drive the pinion 39 and thus rotate the turn table and the car carried upon the rails 12 thereof. Before the turn table is rotated, the pair of shoes 13 at one end are preferably disconnected by shifting the bolts 17 so that the adjacent ends of the turn table rails 12 can be brought into alinement with the rails of the short side track. A rope is then connected to the car on the turn table, run over a suitable pulley and over the drum 61. The motor shaft is disconnected from the gearing for rotating the turn table and is connected to the drum 61 by means of the clutch 62 to draw the car from the turn table onto the side track. The turn table is then brought back into line with the main track, the transportation car is run back into position and the hooks 76 thereon are connected to the links or chains 77. Air under pressure is admitted to the outer ends of the cylinders 67 and the turn table is raised from the track. Of course, by reversing the operation described, a car can be removed from the short side track and placed on the rails of the main track. The apparatus can thus be conveniently used on street and other railways for transferring cars from the main track to a short side track which is not connected to the main track. It can be used on street railways at night when the traffic is small to transfer freight cars from the rails of the track in the street to short tracks located in buildings at the sides of the street. The improved apparatus can also be used for shifting cars to and from the rails in many places where it would be impractical to connect a short side track to the main rails through the medium of a switch.

It is obvious that changes may be made in the details set forth without departure from the essentials of the invention as defined in the claims.

I claim as my invention:—

1. A portable turn-table for railways comprising a rigid base member adapted to be transported along the track, a rigid turn-table frame concentrically mounted on said base member, and longitudinal, projecting frame bars and rails mounted on said turn table, said rails having inclined portions at their opposite ends for connecting the same to said track rails.

2. A portable turn-table for railways comprising a rigid base member adapted to be transported along the track, a rigid turn-table concentrically mounted on said base member, longitudinal, projecting frame bars and rails mounted on said turn-table, and inclined shoes mounted at the opposite ends of said turn-table rails for connecting the same to said track rails, one at least of said shoes being detachably mounted.

3. A portable turn table for railways comprising a base member adapted to be transported along the track, a turn table rotatably mounted on said base member, rails on said turn table having inclined portions at their ends for connecting the same to the track rails and gearing interposed between said base member and said turn table.

4. A portable turn-table for railways comprising a rigid base member adapted to rest upon the track rails, a turn-table rotatably mounted on said base member and having rails thereon adapted to be connected at

their opposite ends to the track rails, and wheeled trucks separate from said base member for transporting the same and said turn-table along the track.

5. A portable turn table for railways comprising a base member having lugs for engaging the track rails, a turn table rotatably mounted on said base member and having rails thereon with inclined portions at their ends for connecting the turn table rails to the track rails, and suitable means for transporting said base member and turn table along the track.

6. The combination of a railway car, of a turn table carried by and detachable from the car and having rails thereon adapted to be connected to the track rails.

7. A portable turn-table for railways comprising a rigid base member adapted to engage track rails, a rigid turn-table concentrically mounted on said base member, longitudinal, projecting frame bars and rails mounted on said turn-table, said rails having inclined portions at their opposite ends for connecting said turn-table rails to the track rails, suitable means for raising and lowering said base member and said turn-table to and from the track and suitable means for transporting said base member and turn-table along the track.

8. A portable turn-table for railways comprising a base member adapted to engage the track rails, a turn-table rotatably mounted on said base member and having rails thereon adapted to be connected at its opposite ends to said track rails, wheeled trucks for transporting the base member and turn-table along the track and suitable means for raising and lowering said base member and turn-table to and from the track.

9. The combination of a railway car, a turn table base arranged to engage the track, means on said car for raising and lowering said base, a turn table rotatably mounted on said base and having rails adapted to be connected to the track rails.

10. The combination of a railway car, a turn table base having lugs arranged to engage the track, means on said car for raising and lowering said base, a turn table rotatably mounted on said base and having rails with inclined portions at their ends for connecting the same to the track rails.

11. The combination of a turn table base arranged to engage the track, a turn table rotatably mounted on said base and having rails adapted to be connected to the track rails, a railway car longer than said turn table, and raising and lowering means on said car detachably connected to said turn table base.

12. The combination of a turn table base arranged to engage the track, a turn table rotatably mounted on said base and having rails adapted to be connected to the track rails, a railway car longer than said turn table, a system of levers on said car detachably connected to said turn table base for raising and lowering the same and fluid pressure cylinders on the car connected to said levers.

13. The combination of a turn table base arranged to engage the track, a turn table rotatably mounted on said base and having rails adapted to be connected to the track rails, a railway car longer than said turn table, a pair of vertically disposed fluid pressure cylinders mounted on said car adjacent its ends, pairs of raising and lowering levers connected to the pistons of said cylinders and detachable connection between said pairs of levers and the ends of said turn table base.

14. In portable turn tables for railways, the combination with a turn table base adapted to be transported along the track, of a turn table rotatably mounted on said base and having rails adapted to be connected to the track rails, gearing interposed between said turn table and said base and a motor for operating said gearing.

15. In portable turn tables for railways, the combination with a turn table base adapted to be transported along the track, of a turn table rotatably mounted on said base and having rails adapted to be connected to the track rails, gearing interposed between said turn table and said base comprising a bull wheel mounted on said base and a pinion connected to said turn table and engaging said bull wheel, and a motor on said turn table for rotating said pinion.

16. In portable turn tables for railways, the combination with a turn table base adapted to be transported along the track, of a turn table rotatably mounted on said base and having rails adapted to be connected to the track rails, gearing interposed between said turn table and said base, a drum mounted on one end of said turn table, a motor mounted on said turn table and clutch mechanism for connecting said motor to said gearing and to said drum.

17. In portable turn tables for railways. the combination of a base member adapted to be transported along the track, a turn table rotatably mounted on said base member and having rails thereon and separate pairs of inclined shoes for connecting the ends of said turn table rails to the track rails.

18. In portable turn tables for railways, the combination of a base member adapted to be transported along the track, a turn table rotatably mounted on said base member and having rails thereon, separate pairs of shoes for connecting the ends of said turn

table rails to said track rails, bolts for detachably connecting one of said pairs of shoes to said turn table.

19. In portable turn tables for railways, the combination of a base member adapted to be transported along the track, a turn table rotatably mounted on said base member and having rails thereon, links connecting one pair of shoes to said turn table and spring actuated lifting means engaging said links.

20. In portable turn tables for railways, the combination of a base member adapted to be transported along the track and having means arranged to engage the same, a turn table platform rotatably mounted on said base member, longitudinally extending frame bars and rails on said platform, inclined shoes mounted at the ends of said turn table rails for connecting the same to the track rails and rollers for supporting the projecting ends of said turn table rails.

21. The combination with a turn-table base arranged to engage the track, a turn-table rotatably mounted on said base and having rails adapted to connect with the track rails, wheeled supporting means detachably connected to said base for transporting the same and said turn-table along the track and suitable means for raising and lowering said base and turn-table to and from the track.

22. The combination with the rails of a railway track, of a portable turn-table, rails on said turn-table having inclined portions at their ends for connecting the same to said track rails, and a railway car longer than said turn-table adapted to transport the same along the track, said car having trucks outside the ends of said turn-table rails and provided with wheels engaging said track rails.

23. The combination with a turn-table base arranged to engage the track, a turn-table rotatably mounted on said track and having rails adapted to be connected to the track rails, and a railway car longer than said turn-table and having wheeled trucks at its ends and means for supporting said base and turn-table beneath the platform of said car and between the trucks thereof.

24. A portable turn-table for railway cars comprising a base member, a turn-table rotatably mounted on said base member and having rails thereon adapted to be connected to the track rails and wheeled trucks for transporting said base member and said turn-table along the track.

25. A portable turn-table for railway cars comprising a base member, a turn-table rotatably mounted on said base member and having rails thereon adapted to be connected to the track rails, suitable means for raising and lowering said base member to and from the track and wheeled trucks for transporting said base member and turn-table along the track.

26. A portable turn-table for railway cars comprising a base member, a turn-table rotatably mounted on said base member and having rails thereon adapted to be connected to the track rails, suitable means for raising and lowering said base member and turn-table to and from the track and wheeled trucks separate from said base member and detachable therefrom for transporting the same and said turn-table along the track.

27. A portable turn-table for railways comprising a base member adapted to be transported along the track, a turn-table platform rotatably mounted on said base member, longitudinally extending frame bars and rails on said platform, rollers for supporting the projecting ends of said turn-table rails and spring-held boxes wherein said rollers are journaled.

28. A portable turn-table for railways comprising a rigid base member adapted to be transported along the track, and having means arranged to engage the same, a turn-table platform concentrically mounted on said base member, a circular series of bearing rollers interposed between said base member and said platform, longitudinal, projecting frame bars and rails on said platform, and inclined shoes mounted at the opposite ends of said turn-table rails for connecting the same to said track rails.

DANIEL E. FALVEY.

Witnesses:
ELEANOR HAGENON,
KATHARINE GERLACH.

Copies of this patent may be obtained for five cents each, by addressing the "Commissioner of Patents. Washington, D. C."