United States Patent [19]

Sedgfield et al.

[11] **3,708,029**

[45] **Jan. 2, 1973**

[54] **SYSTEM FOR GUIDING VEHICLES**

[75] Inventors: **Hugh B. Sedgfield,** late of Esher, England; **Norman Kenneth Brown,** Binfield; **Eric James Birchnall,** Bracknell, both of England

[73] Assignee: **Sperry Rand Limited,** London, England

[22] Filed: **Feb. 16, 1970**

[21] Appl. No.: **11,637**

[30] **Foreign Application Priority Data**

Feb. 15, 1969 Great Britain.....8,344/69

[52] **U.S. Cl.**.....**180/79,** 104/244.1

[51] **Int. Cl.**.....**B62d 3/00**

[58] **Field of Search**.....180/79; 104/244.1, 247

[56] **References Cited**

UNITED STATES PATENTS

3,492,949	2/1970	Brown	104/244.1
2,925,875	2/1960	Bourdon	104/247
2,068,403	1/1937	Ekstrom	104/247 UX
3,393,762	7/1968	Matson	180/79

FOREIGN PATENTS OR APPLICATIONS

299,756	10/1928	Great Britain	180/79

Primary Examiner—Kenneth H. Betts
Assistant Examiner—John A. Pekar
Attorney—S. C. Yeaton

[57] **ABSTRACT**

An automatic steering mechanism for mounting on a steerable vehicle to guide it along a slot in a track has a feeler mounted forwardly of the front wheels of the vehicle to engage in and sense the position of the slot. Movements of the feeler laterally with respect to the vehicle are transmitted through a system of incompressible links to control an hydraulic ram. The ram movement is damped and applied to the track rod of the vehicle.

15 Claims, 6 Drawing Figures

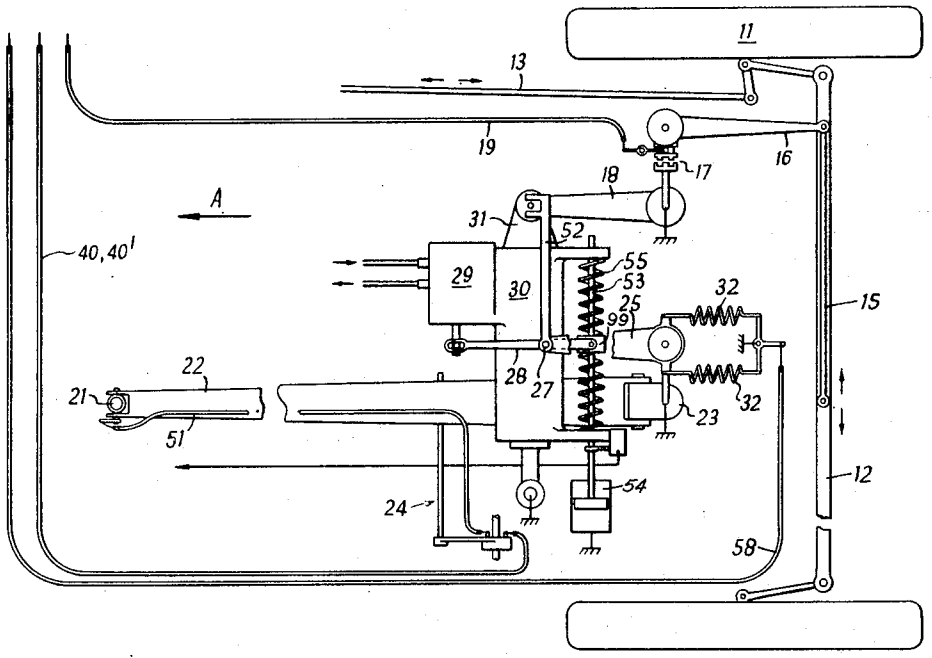

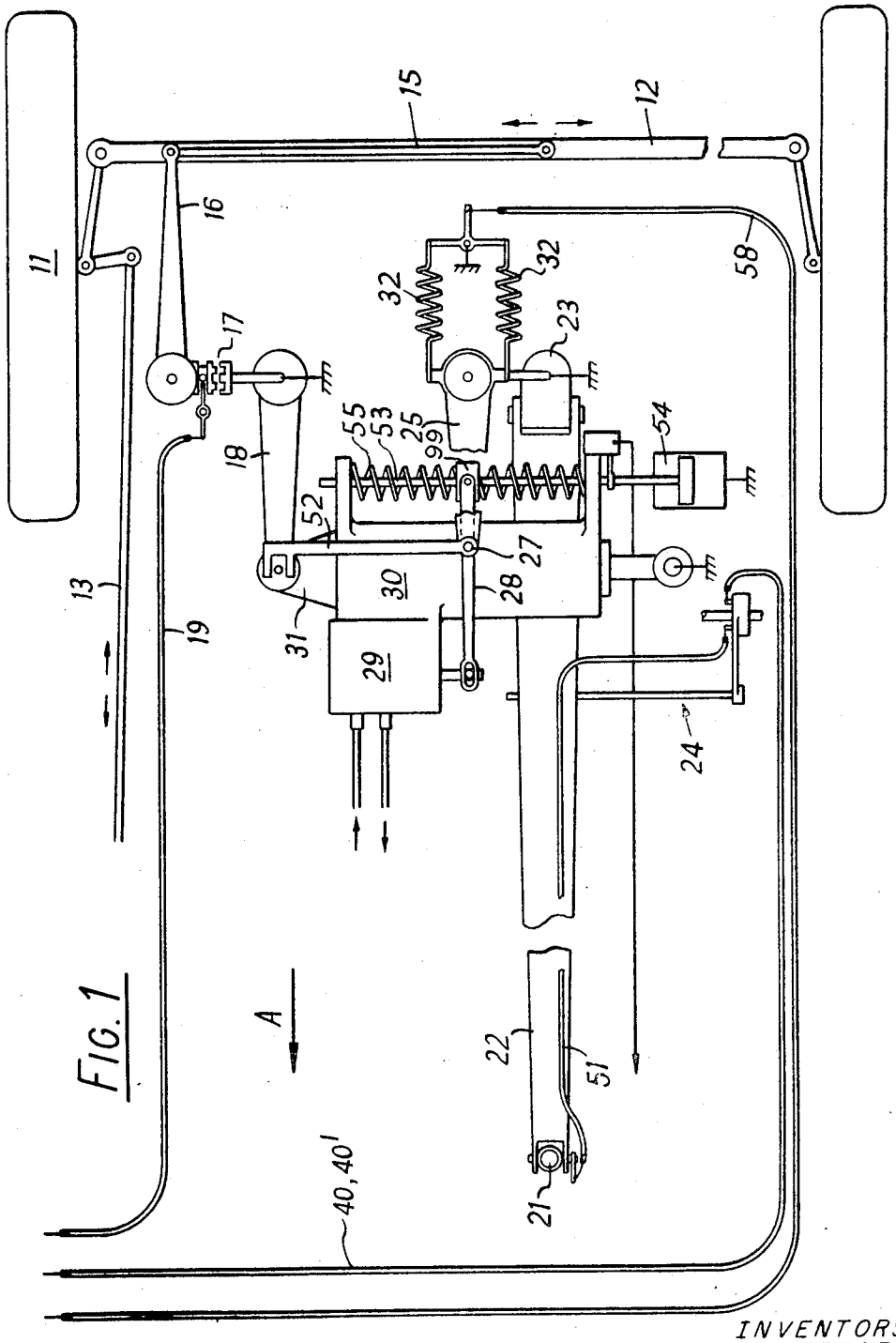

FIG. 1

INVENTORS
HUGH B. SEDGFIELD
NORMAN K. BROWN
ERIC J. BIRCHNALL
BY
H P Ferry
ATTORNEY

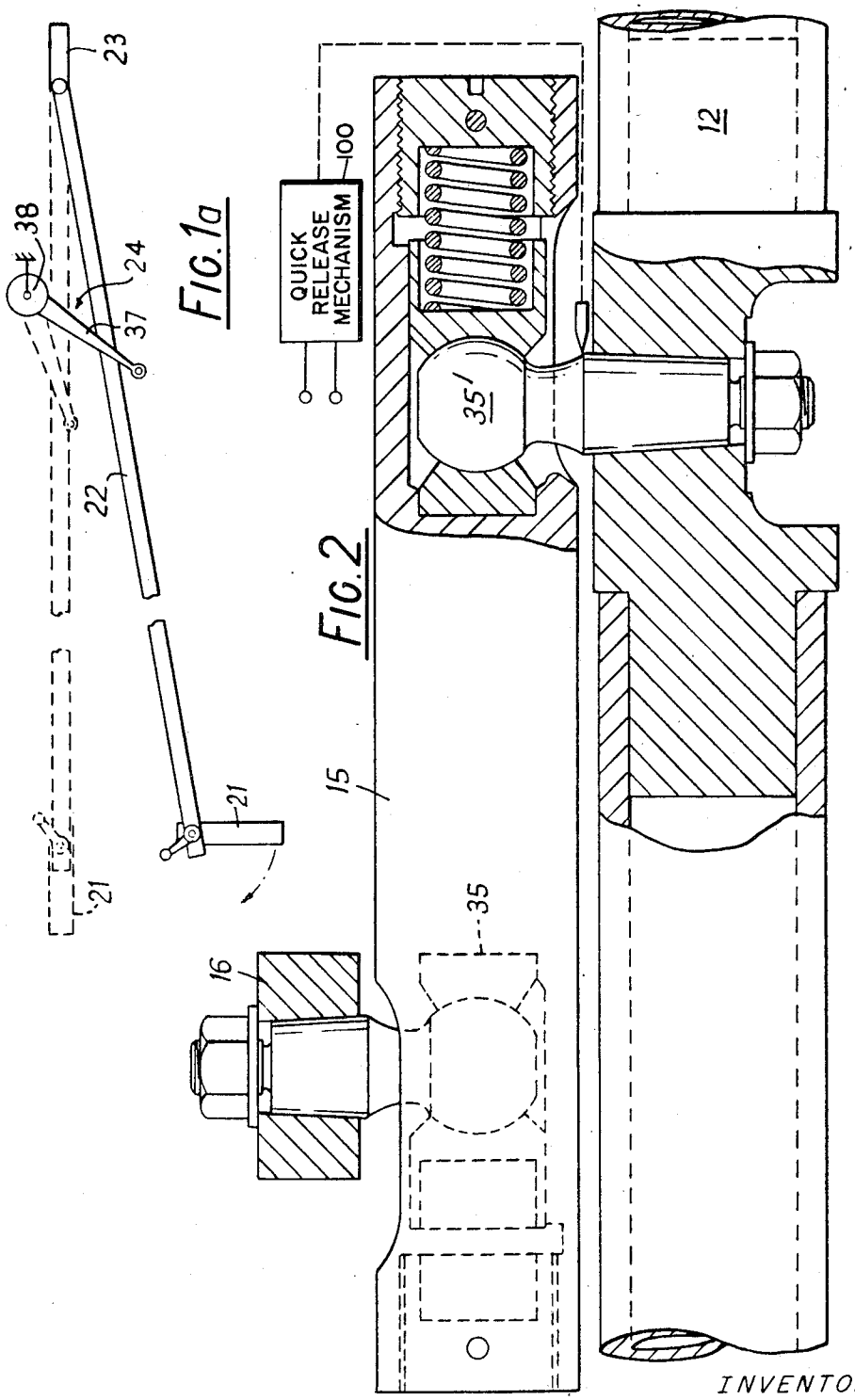

INVENTORS
HUGH B. SEDGFIELD
NORMAN K. BROWN
ERIC J. BIRCHNALL
BY
H P Terry
ATTORNEY

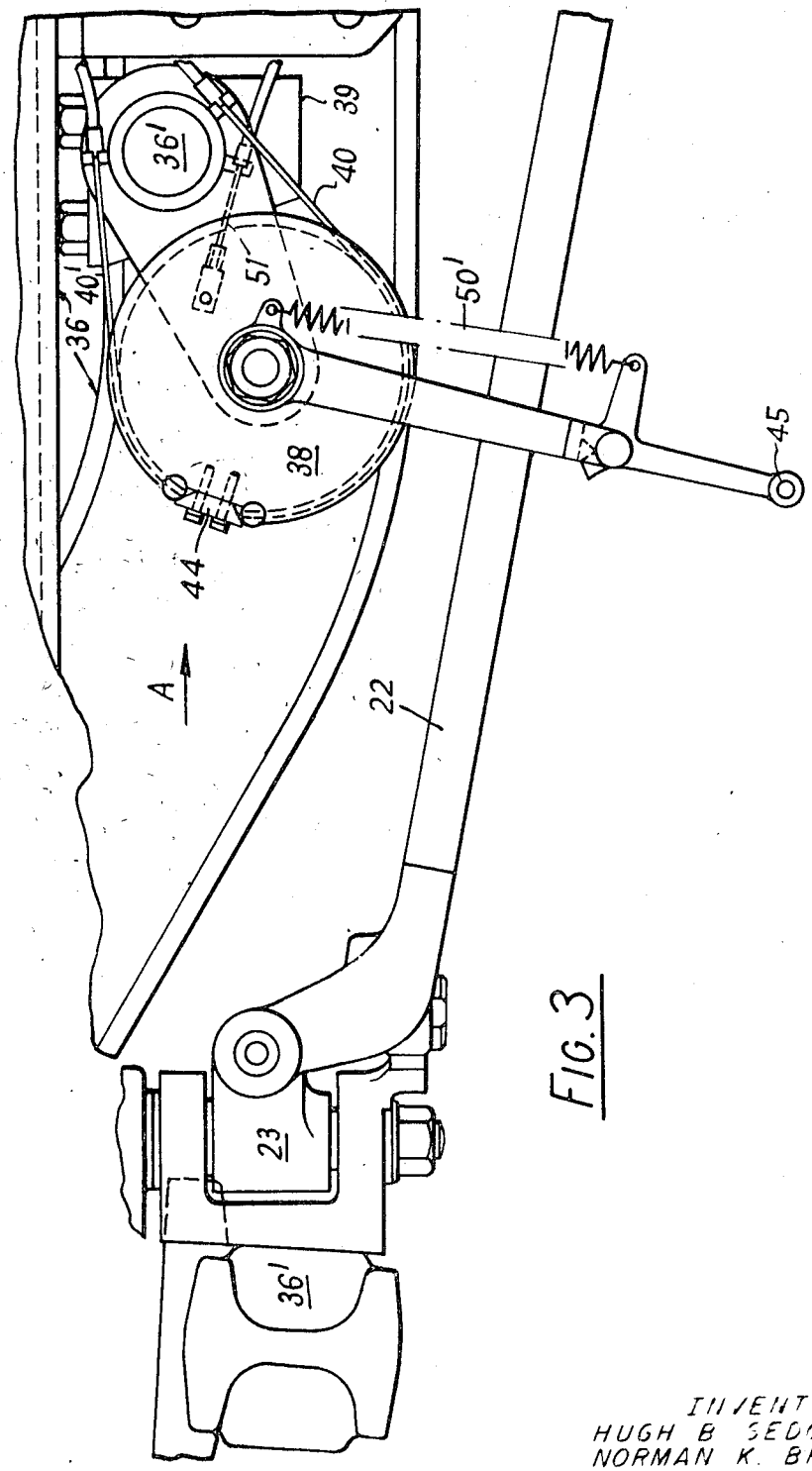

FIG. 3

INVENTORS
HUGH B. SEDGFIELD
NORMAN K. BROWN
ERIC J. BIRCHNALL
BY
H P Terry
ATTORNEY

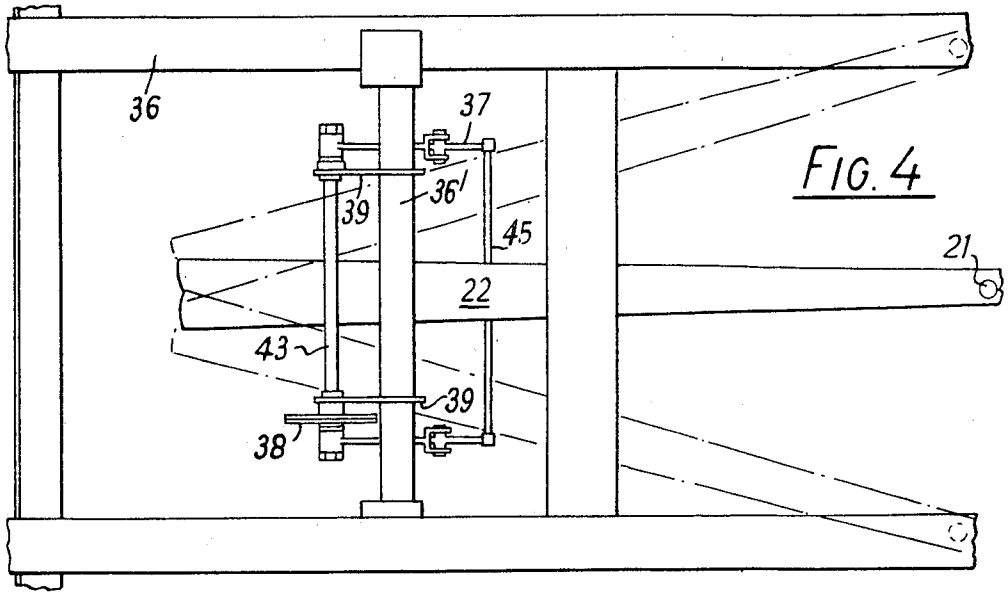

FIG. 4

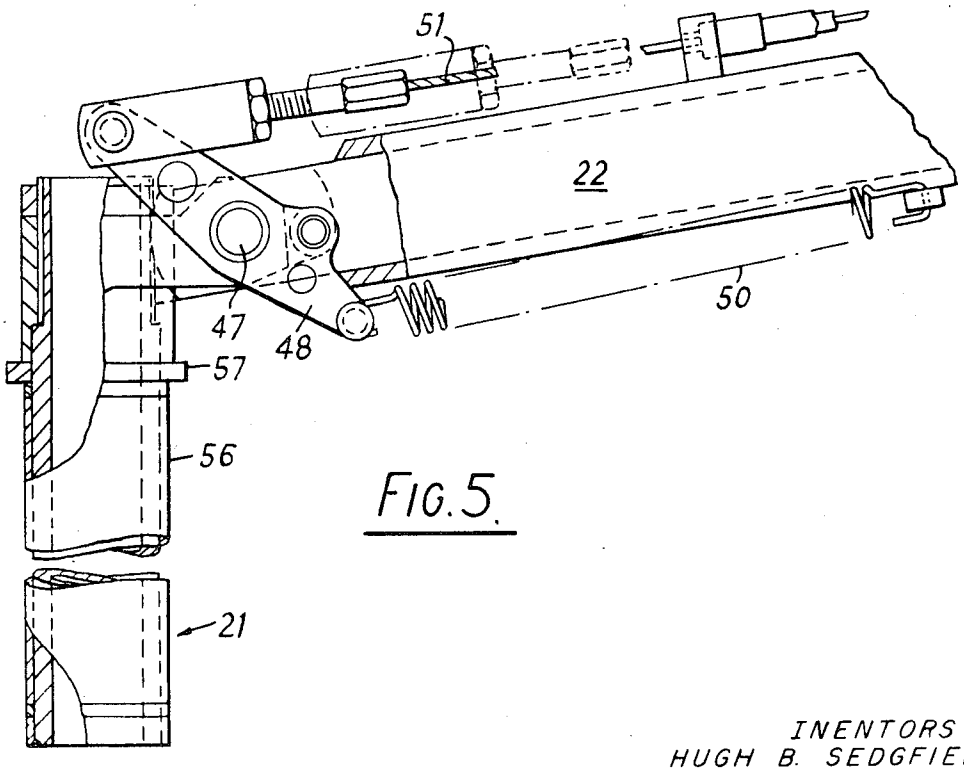

FIG. 5

INENTORS
HUGH B. SEDGFIELD
NORMAN K. BROWN
ERIC K. BIRCHNALL
BY
H P Terry
ATTORNEY

SYSTEM FOR GUIDING VEHICLES

CROSS-REFERENCES TO RELATED APPLICATIONS

U.S. patent application Ser. No. 691,048 filed Dec. 15, 1967 in the name of Norman Kenneth Brown (assignor to the assignees of the present invention) now U.S. Pat. No. 3,492,949 describes a system for automatic guidance using an electrical control circuit. The present invention is both simpler and more reliable than the prior one.

BACKGROUND OF THE INVENTION

The invention relates to methods of automatically guiding steerable vehicles along a track.

It has been desired for many years to dispense with manual steering of vehicles and many systems have been proposed including the basic system used in the present invention of following a guide slot by a feeler sliding in the slot. However all prior systems have only been capable of use at very slow speeds.

This invention relates to a system for guiding vehicles along a track. More particularly the invention relates to an automatic steering mechanism carried by the vehicle arranged to co-operate with a guide slot in the track.

The invention provides an automatic steering mechanism for mounting on a steerable vehicle to guide it along a guide slot in a track, said mechanism comprising a feeler for entering the guide slot and sensing its lateral position relative to the vehicle, an arm extending forwardly of the mechanism and carrying said feeler at its forward end so that in use the feeler is in advance of the front wheels of the vehicle, a mounting for the rear end of said arm allowing the arm freedom about a vertical axis, auxiliary power means adapted for connection to drive steering gear of the vehicle, and a system of incompressible links linking movement of said arm about said vertical axis to control said auxiliary power means in the sense that, in use, lateral displacement of said vehicle from a predetermined position relative to the guide slot results in a steering adjustment tending to restore said predetermined position.

It has been found that if the automatic steering mechanism is to steer a road vehicle at the relatively high speeds, e.g. 50 to 70 m.p.h., of which the vehicle may be capable, then certain criteria must be fulfilled. Firstly there must be a measure of anticipation of required steering adjustments so that the steering correction, which inevitably takes a finite time to achieve, is effected in time and the vehicle follows a "pursuit" course. With the steering arrangement of the specific embodiment it is found that a satisfactory degree of anticipation is secured by positioning the sensing feeler about 55 inches in advance of the axis of the front steering wheels of the vehicle. This allows smooth steering without setting up oscillations, at speeds up to 60 m.p.h. The second criterion is that the feeler must not bear heavily against the sides of the slot since this reduces the sensitivity of the error sensing. It follows that the feeler movement should not in normal operation be used directly to effect steering corrections, and in the present embodiment the feeler movement is used to control an hydraulic valve which supplies the power necessary to adjust the steering wheels. The third criterion is that there must be minimum play in any linkage through which the error signal is transmitted. Excessive play in the linkage would be likely to mean that an oscillatory path would be followed by the vehicle. According to the present embodiment therefore the error signal is applied to the hydraulic valve through a system of rigid (i.e. incompressible) links with minimum free play therebetween.

The specific embodiment of the invention is now described in detail, with reference to the accompanying drawings, in which:

FIG. **1** is a diagrammatic plan layout (not to scale) of an automatic steering mechanism,

FIG. **1***a* is a side view of a follower arm of FIG. **1**,

FIG. **2** is a detail to scale of the connections of the automatic steering mechanism to the track rod steering of a vehicle,

FIG. **3** is a detail to scale of the follower arm and follower lifting gear of FIGS. **1** and **1***a*,

FIG. **4** is a plan view of the follower arm and lifting gear of FIG. **3**, and

FIG. **5** is a detail to scale of follower pin erecting gear of FIGS. **1** and **1***a*.

Referring first to FIGS. **1** and **1***a* for a brief description of the overall system, the front wheels **11** of a vehicle which travels in the direction of arrow A are shown with their conventional associated steering track rod **12** connected to be manually steered through a drag link **13**. Provision is also made for automatic steering through a linkage which comprises track rod link **15** connected to track rod **12** by means shown in FIG. **2**, output lever **16**, clutch **17** and actuator lever **18**. Clutch **17** comprises a dog clutch which is manually operated by cable **19** by the driver of the vehicle. When the driver wishes to steer manually therefore he disengages the clutch **17**.

A mechanical signal for controlling the automatic steering is derived from a follower pin or feeler **21**, which depends from the vehicle and engages in a guide slot (not shown) formed in the roadway along which the vehicle travels. The pin and slot are described in more detail in our U.S. Pat. No. 3,492,949, "Steering Vehicles Along A Track" issued Feb. 3, 1970 and in British Pat. 1,151,932 "System For Controlling a Vehicle" by H. Sedgfield, published May 14, 1969. The pin is mounted at the lower end of an aluminum follower arm **22**, 50 inches long, which points forward and down from a pivotal mounting **23** which gives the arm freedom to pivot about a horizontal axis so that the pin can be raised by a lifting mechanism **24** for operation of the vehicle on a normal roadway without automatic steering. Mounting **23** itself is mounted to be pivotal about a vertical axis a few inches in front of the wheel axis of the vehicle and is connected to rotate an input lever **25**. The end of input lever **25** is pinned at **27** to a valve operating lever **28**, which positions the spool of an hydraulic valve **29** controlling a ram **30**. The movement of the ram **30** in turn operates the linkage described above to effect a steering adjustment. A pair of centering and bias springs **32** normally operate to tend to maintain the lever **25** and arm **22** in a central position. If, however, the slot in which pin **21** is running departs from a central position in front of the vehicle, as when a change in direction of the guide slot occurs or when the vehicle wanders with respect to the slot,

then the pin **21** moves in a horizontal plane relative to the vehicle, so causing mounting **23** and levers **25** and **28** to rotate. A steering adjustment in the sense to return the vehicle to a central position relative to the slot is therefore made. As can best be seen in FIG. **1**, pin **21** is about 55 inches in advance of the wheels **11**, so that the need for a steering adjustment is detected before the wheels reach the point at which the pin detected the requirement. The angle through which the arm **22** moves when sensing an error is approximately equal to the angle through which the wheels **11** are adjusted.

Valve operating lever **28** has an extension from pin **27** which is secured to a collar **99** which in turn is fixedly secured on a rod **53**. Rod **53** is slidably mounted in extensions of the body of ram **30** and has one end secured to the piston of a stationary dashpot **54**. A pair of springs **55** surround the rod **53** and act between the collar **99** and the ram extensions.

If the mechanical signal from the arm **22** is followed exactly by the steering gear, it is found that lateral accelerations of a level which might cause some passenger discomfort can be demanded at speeds of 60 m.p.h. In order to avoid this, the springs **55** and dashpot **54** in conjunction with the geometry of the mounting of lever **28** afford a measure of phase advance compensation which modifies the relationship between the follower arm signal and the consequent change in steering wheel angle.

When a steering adjustment is called for by movement of input lever **25**, pivot point **27** is moved thereby. The dashpot **54** resists movement of the collar **99** via the rod **53** upon movement of the lever **25**. Additionally, the springs **55** are substantially incompressible by the force applied to the lever **28** and therefore assist in preventing movement of the collar **99** with respect to the ram body **30**. Thus the lever **28** pivots about its mounting in the collar **99** to open the valve **29**. This causes the ram body **30** to move in the appropriate direction so beginning a steering adjustment. The ram **30** moving in the appropriate direction compresses one of the springs **55** which in turn reacts on the collar **99** and hence the dashpot **54**. The resultant movement of the dashpot **54** moves the rod **53**, the collar **99** and the lever **28** in a sense to close the valve thereby backing-off the operation of the ram **30**. The springs **55** and the dashpot **54** thus act to introduce a delay in this backing-off of the input originally applied to the valve **29** and provide the required phase advance compensation referred to above. Thus it will be appreciated that the dashpot **54** provides the necessary initial resistance to movement of the collar **99** when a steering change is first commanded and subsequently assists in delaying the backing-off of the command signal, i.e. in providing the phase advance compensation, in conjunction with the springs **55**. The motion of the ram body **30**, therefore, is controlled to prevent any sudden steering adjustment. Moreover, the motion of the ram body **30** applying the force through the springs **55**, move the collar **99** whereby the lever **28** is pivoted to a position in which the valve **29** is partially closed.

The ram comes to rest at a position where the road wheels are steered by the required amount, the valve spool remaining open sufficiently to maintain the ram holding the wheels in this position. A stable response which gives a smooth passenger ride is thereby established.

Turning to a more detailed description of the parts of the system, FIG. **2** shows the connection of the automatic steering lever **16** to the conventional track rod **12** of the vehicle. A short track rod link **15** is used connected pivotally at one end to the lever **16** and at the other end pivotally to the center point of the track rod **12**. Both pivotal connections are made by 1-inch diameter balls **35**, **35'** carried on tapers which fit into corresponding tapered openings in lever **16** and track rod **12**. Should the arm **22** become seriously damaged, e.g. bent in operation, an electrically operated quick release mechanism schematically illustrated at **100** causes ball **35'** to be sheared from its taper thereby interrupting the drive from the arm to the steering gear.

FIGS. **3** and **4** show in more detail part of the follower arm **22** and the lifting gear **24** which have the same reference numerals as in FIGS. **1** and **1***a*. Main chassis members **36** and front axle members **36'** of the vehicle on which the automatic steering system is mounted are also shown.

The lifting gear comprises a pair of levers **37** spaced apart along a shaft **43**, and joined at their ends by bar **45**. A fixed beam of the chassis carries a pair of brackets **39** in which the shaft **43** is mounted with freedom to rotate therein. Near one end shaft **43** carries a pulley **38** keyed thereto, which pulley has a V-section groove around its circumference. A pair of operating cables **40**, **40'** extend in opposite senses around the V groove and are secured by a clamp **44** at their ends. The free ends of the cables extend to the driver's cab where by pulling cable **40** the driver causes pulley **38** to rotate anticlockwise as viewed in FIG. **3**, and so turns levers **37**. As best seen from FIGS. **1***a* and **4**, this causes bar **45** to engage the follower arm **22** to lift the arm and pin **21** to a retracted position shown in dotted lines in FIG. **1***a*. When the driver pulls the other cable **40'** the levers **37** rotate in the clockwise sense to return the follower arm to the operative position.

Levers **37** are each formed in two parts one capable of pivotal motion relative to the other and spring **50'** maintains the two parts normally aligned. Since the arm **22** is mounted on a member of the front axle assembly and the lifting gear **24** on the chassis, some differential motion takes place due to motion of the chassis springs. This motion is allowed for by the spring **50'**.

As best seen in FIG. **1***a*, the pin **21** is rotated to lie horizontally when the arm is in its retracted position and FIG. **5** shows in more detail the arrangements for effecting this rotation. The pin **21** and arm **22** are shown in the operative position. Pin **21** is carried on a lever **48** which is pivotally mounted to rotate about a horizontal axis **47** at the end of arm **22**. One end of lever **48** is urged by a coil spring **50** in the anticlockwise sense as viewed in FIG. **5**, while the other end has a cable **51** attached thereto. The cable **51** extends between the lever **48** and the pulley **38** (FIG. **3**) of the lifting gear **24**. When the pulley **38** is rotated in the sense to lift arm **22**, cable **51** is pulled thereby so as to rotate lever **48** against the force of spring **50** until the pin lies parallel to arm **22**. When the pulley **38** is rotated in the opposite sense, cable **51** is released and spring **50** returns the pin to the operative position.

When the vehicle reaches a junction in the track at which a choice of two routes is available, the choise is determined by the driver of the vehicle prior to reaching the junction. The driver operates cable **58** so as to cause springs **32** to be displaced in the sense to apply a torque to the lever **25** and arm **22** causing the pin to be bias urged against one side or the other of the guide slot. When a junction of two guide slots is reached therefore the pin follows the side of the guide slot against which it is urged and so enters the guide slot on that side. The centring and bias springs **32** are relatively light springs; in normal unbiassed operation of the system the pin experiences a resistance to movement of less than 1 oz per inch, while in biassed operation the pin is urged against the side of the slot with a pressure of about 10 ozs.

It will be particularly noted that the linkage between pin **21** and the valve **29** consists of rigid levers linked together with minimum play being allowed at the links so as to reduce the 'dead' movements of the linkage to a minimum. No compressible members e.g. springs are included in the operating linkage.

Should the hydraulic actuator **30** fail, due for instance to a failure of the hydraulic pressure supply, a link **52** from pin **27** to actuator lever **18** ensures the continued operation of the automatic steering by direct drive from the pin **21** to the steering linkage. In normal usage this link is redundant, and is connected with sufficient end play (about 0.02 inches) to ensure that the normal ram output movement does not affect it. In these circumstances, of course, the side pressure on the pin will be severe, the characteristics of the control would deteriorate, speed would have to be decreased to about 20 m.p.h. for comfort, and the wear on the pin will be increased. However, the failure of the actuator does not result in total loss of automatic steering ability.

As seen best in FIG. **5**, the pin **21** comprises a tubular base on which a wear-resistance ceramic outer coating **56** of titania alumina is formed. A collar **57** prevents the pin from dropping too far into the guide slot. The mounting on lever **48** allows the pin to rotate slowly while running on the side of the guide slot, so as to reduce the effects of wear.

Varios electrical sensing switches (not shown) sense the position of the movable parts of the system, and operate indicators in the driver's cab to show that the system is operating properly.

Although the above described embodiment of the invention was explained in terms of a forwardly extending arm **22**, it may alternatively be desirable for certain applications to mount the arm **22** in a rearwardly extending direction. This may be accomplished by positioning the mounting **23** on the vehicle chassis in advance of the steering wheels such that the entire arm **22** and the feeler **21** is extending rearwardly from the mounting **23** but located forward of the steering wheel axle.

What is claimed is:

1. An automatic steering mechanism for mounting on a steerable vehicle to guide it along a guide slot in a track, said mechanism comprising:

a. a feeler for entering the guide slot and sensing its lateral position relative to the vehicle,

b. an arm extending from the mechanism and carrying said feeler at one end thereof,

c. a mounting at the opposite end of said arm allowing the arm freedom about a vertical axis,

d. auxiliary power means for connection to drive the steering gear of the vehicle,

e. said auxiliary power means including a power control element, and

f. a system of substantially incompressible mechanical links having substantially no free play mechanically connecting said arm only to said power control element in normal automatic steering operation for linking movement of said arm about said vertical axis to control said auxiliary power means.

2. An automatic steering mechanism as claimed in claim **1**, wherein said auxiliary power means is an hydraulic ram having mechanical linkage for driving said steering gear, and a control valve connected to said system of incompressible links.

3. An automatic steering mechanism as claimed in claim **2** further including a quick-release mechanism for severing said mechanical linkage thereby disconnecting said hydraulic ram from said steering gear.

4. An automatic steering mechanism as claimed in claim **3** in which

said mechanical linkage includes links and a ball and taper pin, said ball being connected in one of said links and said taper being connected in another of said links, and

said quick-release mechanism includes means for shearing said ball from said taper.

5. An automatic steering mechanism as claimed in claim **2** including feedback means for applying a feedback movement from the output of the auxiliary power means to the system of mechanical links comprising resilient means connecting said hydraulic ram to said mechanical links in a manner tending to close said control valve in response to the steering movement of said hydraulic ram.

6. An automatic steering mechanism as claimed in claim **5**

in which said resilient means comprises spring means resiliently coupling said hydraulic ram to said mechanical links, and

further including mechanical damping means coupled to said mechanical links,

said spring means and said damping means being so constructed and arranged with respect to said mechanical links that said feedback movement from said auxiliary power means to the system of mechanical links is initially resisted, thereby providing phase advance compensation.

7. An automatic steering mechanism as claimed in claim **1**, further including mechanical means for applying a feedback movement from the output of the auxiliary power means to the system of mechanical links.

8. An automatic steering mechanism as claimed in claim **1** in which

said arm extends forwardly of said mechanism and carries said feeler at its forward end, and

said mounting being at the rear end of said arm.

9. An automatic steering mechanism as claimed in claim **1** further including

mechanical coupling means for mechanically coupling said links to said steering gear to maintain control of said vehicle in the event of failure of said steering mechanism.

10. An automatic steering mechanism for mounting on a steerable vehicle to guide it along a guide slot in a track, said mechanism comprising:

a. an arm extending from the mechanism,

b. a mounting at one end of the arm allowing said arm freedom for pivoting movement about vertical and horizontal axes,

c. means engaging said arm for lifting it about its horizontal axis to an inoperative position,

d. a feeler mounted at the opposite end of said arm,

e. auxiliary power means for connection to drive the steering gear of the vehicle,

f. said auxiliary power means including a power control element, and

g. a system of rigid, mechanical links having substantially no free play mechanically connecting said arm only to said power control element in normal automatic steering operation for linking movement of said arm about said vertical axis to control said auxiliary power means.

11. An automatic steering mechanism as claimed in claim 10, wherein said feeler comprises a pin pivotable about a horizontal axis at said opposite end of the arm, and wherein there is provided means for rotating said pin between a vertical, operative position and an inoperative position parallel to the arm when said engaging means lifts said arm to said inoperative position.

12. An automatic steering mechanism as claimed in claim 10, wherein said feeler comprises a pin mounted with freedom for rotation about its axis and having a wear-resistant outer surface.

13. An automatic steering mechanism as claimed in claim 10 in which

said arm extends forwardly of said mechanism,

said mounting being at the rear end of said arm, and

said feeler being mounted at the forward end of said arm.

14. A vehicle having steering gear connected to steerable wheels and automatic means for controlling said steering gear to guide the vehicle along a guide slot in a track, said automatic means comprising:

a. an arm extending longitudinally and downwardly from forward of the steering wheels,

b. a feeler mounted at one end of said arm for entering said guide slot and sensing its lateral position relative to the vehicle,

c. a mounting at the opposite end of said arm secured to the vehicle and providing freedom for said arm about a vertical axis,

d. a system of substantially incompressible mechanical links having substantially no free play connected to said arm,

e. auxiliary power means connected to be controlled by said system of mechanical links and to drive said steering gear in the sense to maintain the vehicle in a predetermined position relative to the guide slot,

f. said auxiliary power means including a power control element, and

g. said system of mechanical links mechanically connecting said arm only to said power control element in normal automatic steering operation for linking movement of said arm about said vertical axis to control said auxiliary power means.

15. The vehicle as claimed in claim 14 in which

said arm extends forwardly and downwardly from adjacent the steering wheels,

said feeler being mounted at the forward end of said arm, and

said mounting being at the rear end of said arm.

* * * * *