(No Model.) 2 Sheets—Sheet 1.

J. S. EDGE.

MACHINE FOR BUILDING AND REROLLING WIRE FENCES.

No. 350,423. Patented Oct. 5, 1886.

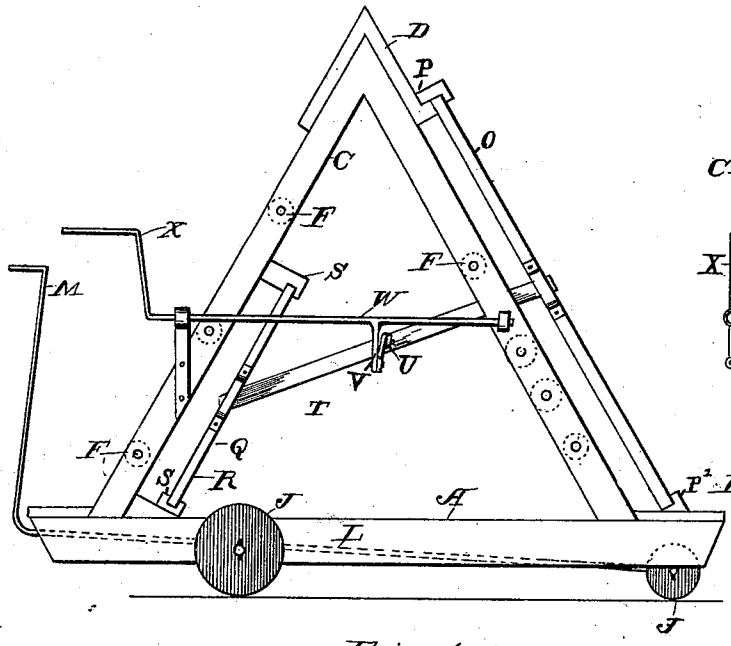

Fig. 1.

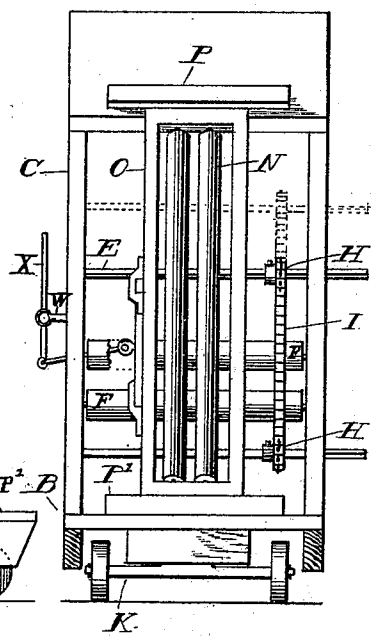

Fig. 2.

WITNESSES:

C. D. Gribz

W. M. Killoch

INVENTOR:

John S. Edge

By J. D. Gribz

Attorney.

N. PETERS, Photo-Lithographer, Washington, D. C.

(No Model.) 2 Sheets—Sheet 2.

J. S. EDGE.

MACHINE FOR BUILDING AND REROLLING WIRE FENCES.

No. 350,423. Patented Oct. 5, 1886.

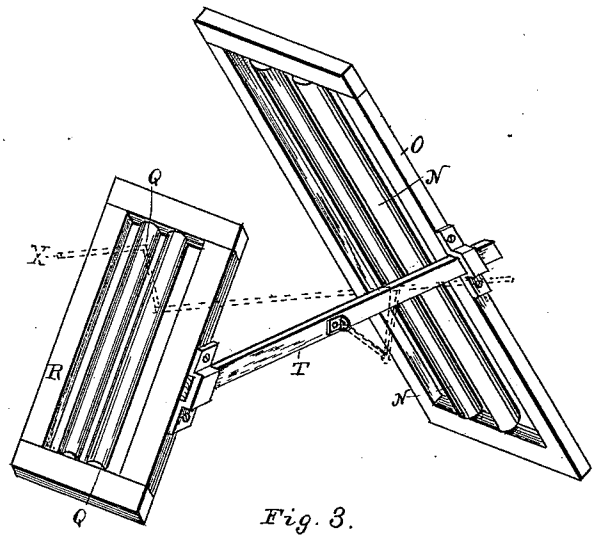

Fig. 3.

WITNESSES:

Robert Kirk.

Dugald McKillop.

INVENTOR:

John S. Edge.

By J. S. Edge

his Attorney.

N. PETERS, Photo-Lithographer, Washington, D. C.

UNITED STATES PATENT OFFICE.

JOHN S. EDGE, OF BRYAN, TEXAS.

MACHINE FOR BUILDING AND REROLLING WIRE FENCES.

SPECIFICATION forming part of Letters Patent No. 350,423, dated October 5, 1886.

Application filed January 15, 1886. Serial No. 188,706. (No model.)

To all whom it may concern:

Be it known that I, JOHN S. EDGE, of Bryan, in the county of Brazos and State of Texas, have invented a new and useful Improvement in Machines for Building and Rerolling Wire Fences, which improvement is fully set forth in the following specification and accompanying drawings, in which—

Figure 1 is a side elevation of my machine for rebuilding and rerolling wire fences. Fig. 2 is an end elevation of the same, and Fig. 3 is a perspective view showing the rollers.

This invention relates to an improvement on the invention described in my Patent No. 323,303, issued July 28, 1885. The improvement on the original application is designed especially to assist in rerolling or taking down fence-wire.

It consists in a device provided with guide-rollers in pairs, one pair in front and one rearwardly, and adjustable in ways having a guide-lever, so that the wire, before reaching the spools, may pass between them and be moved from side to side at the will of the operator, and thus the wire be wound evenly upon the spools as it is taken in, all of which will now be fully set forth in detail.

In the accompanying drawings, A represents the base-pieces, connected at the ends by means of transverse pieces B, having thereon the upright triangular frame composed of the pieces C, joined together by means of the transverse pieces D at the top. Journaled to this upright frame are the transverse rollers E to receive spools F, carrying the wire-spools. These transverse rollers are provided with the sprocket-wheels H and endless chains I, arranged as in my original patent already given. In addition to these features, in order that the device may easily be moved forward, I provide rollers J beneath the frame-work B of the device, and the forward wheels are placed upon the swivel-axle K. This axle K is provided with a rearwardly-projecting lever, L, having a handle, M, so disposed as to be within easy reach of the operator in guiding the machine.

Forward of the front pieces, C, I provide a pair of rollers, N, journaled within the frame O, adjustable laterally within ways P, secured upon the connecting-pieces D of the frame B, and in ways P′ on the base of the machine. Forward of the rearwardly-inclined pieces C, and within the triangular frame, I provide a second pair of rollers, Q, journaled within a frame, R, adjustable within ways S, secured to the triangular frame. These two adjustable frames, carrying two sets of rollers, are connected together by means of a bar, T, to which a short pitman, U, is attached centrally, connecting with an arm, V, on a lever, W, having a handle, X, rearwardly, by means of which the operator may move the arm and two sets of rollers in either direction laterally. The wire in passing to the spools upon the rollers E is designed to pass between these rollers, and thus be wound evenly upon the spools.

The operation of this device in taking down or rerolling wire fencing is as follows: Empty spools are placed on each of the rollers, or a sufficient number to correspond with the number of wires in the fence. The wires then pass between the rollers N at the forward part of the device, and are attached to the spools F. As will be noticed, the rearward pair of rollers, Q, are short and placed at the lower part of the device, and are thus designed to have the wires that wind on the two lower spools on the rear of the frame pass between them. One man thus operates the two levers M and X, guiding the machine by means of the first, and rewinding the wire evenly as it is received upon the different spools. Two men at the sides of the machine, operating the spools and rollers by means of cranks, wind up the wires and move the entire device forward. A fourth person may be used in front of the machine to cut the staples and loosen the wires from the post, preferably not more than two or three posts ahead of the machine.

The endless chain I, as will be noticed, can be used on the device, as desired. If left on, the sprockets can be somewhat loosened on the rollers, so that they may be turned thereon, as it would be impracticable to wind or tighten all the wires at one time when building fences. These sprockets may be secured to the rollers by means of thumb-screws, or by any other suitable means desired, and in taking down wire fences it will often be necessary

to loosen the thumb-screws in the sprockets and tighten the tension of the wires should they get loose and sag in front of the machine.

When the device is designed for putting up fences it is reversed—that is, the forward part of the machine becomes the rear part—and it will be noticed that the lever that moves the guide-rollers cannot be used, as in this connection it is not necessary.

Having described my invention, what I claim is—

1. In a machine for rerolling wire fences, the combination of the inclined rollers, having their frames adjustable laterally in ways, with the rearwardly-projecting lever, whereby the wire passing between said rollers can be evenly wound, substantially as described.

2. The combination of the upright triangular frame C, having forwardly the inclined rollers N journaled within the adjustable frame O, and the rearward-inclined rollers Q within an adjustable frame, R, through which the wire passes to the spools, substantially as herein set forth.

3. The combination of the base-frame A, the triangular frame C, supported thereon, the transverse rollers E, having thereon the spools F, the rollers N and Q, journaled, respectively, in the frames O and R, the ways P, P′, and S. for the lateral adjustment of said frames, and the lever W, all in the manner and for the purposes described.

In testimony that I claim the foregoing I have hereunto set my hand this 9th day of January, 1886, in the presence of witnesses.

JOHN S. EDGE.

Witnesses:
F. CARUTHERS,
ROBERT H. SMITH.