United States Patent [19]

Hurrell

[11] **3,747,630**

[45] **July 24, 1973**

[54] **PLATE VALVES**

[76] Inventor: **Ronald Arthur Hurrell,** Farley House, Crowborough Hill, Crowborough, England

[22] Filed: **May 20, 1971**

[21] Appl. No.: **145,376**

[30] **Foreign Application Priority Data**

May 20, 1970 Great Britain 24,470/70

[52] **U.S. Cl.** ..... **137/312,** 73/422 GC, 137/625.46, 251/180

[51] **Int. Cl** **F16k 3/08,** G01n/1/10

[58] **Field of Search** ..... 73/422 GC, 23.1; 137/312, 625.46, 625.15, 625.18, 624.18

[56] **References Cited**

UNITED STATES PATENTS

2,742,050	4/1956	Gray et al.	137/312
2,973,117	2/1961	Conklin	73/422 GC
3,114,393	12/1963	Vlasic	137/625.46 X
3,123,096	3/1964	Notaro et al.	251/368 X
3,223,123	12/1965	Young	137/625.46

Primary Examiner—Henry T. Klinksiek
Assistant Examiner—Richard Gerard
Attorney—Seidel, Gonda & Goldhammer

[57] **ABSTRACT**

A plate valve which can be programmed to effect a prescribed sequence or cycle of fluid switching operations as a movable member is advanced or rotated. An intermediate, "programme", plate, is mounted between two outer plates for movement with one of them with respect to the other and adjacent faces of the three plates are in fluid-tight sealing engagement. The plates are formed with registering sets of through holes and external fluid flow connections are made to the openings in the outer plates, any hole in either outer plate to which no connection is required to be made in accordance with the prescribed programme being closed off. The intermediate plate is grooved on one or both of its faces to provide connections between holes as required in accordance with the prescribed programme. This type of valve may be incorporated in a sequential separating apparatus. Preferably the outer plates are of metal and the intermediate plate of polytetrafluoroethylene loaded with graphite. The "programme" grooves may be cut into a thin laminate of suitable material fitted between the intermediate plate and the outer plate with which it is mounted to move.

10 Claims, 4 Drawing Figures

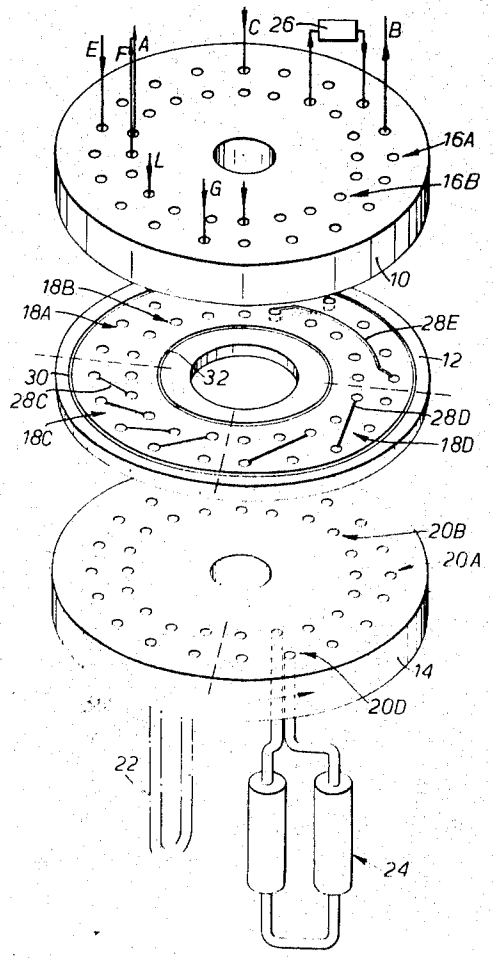

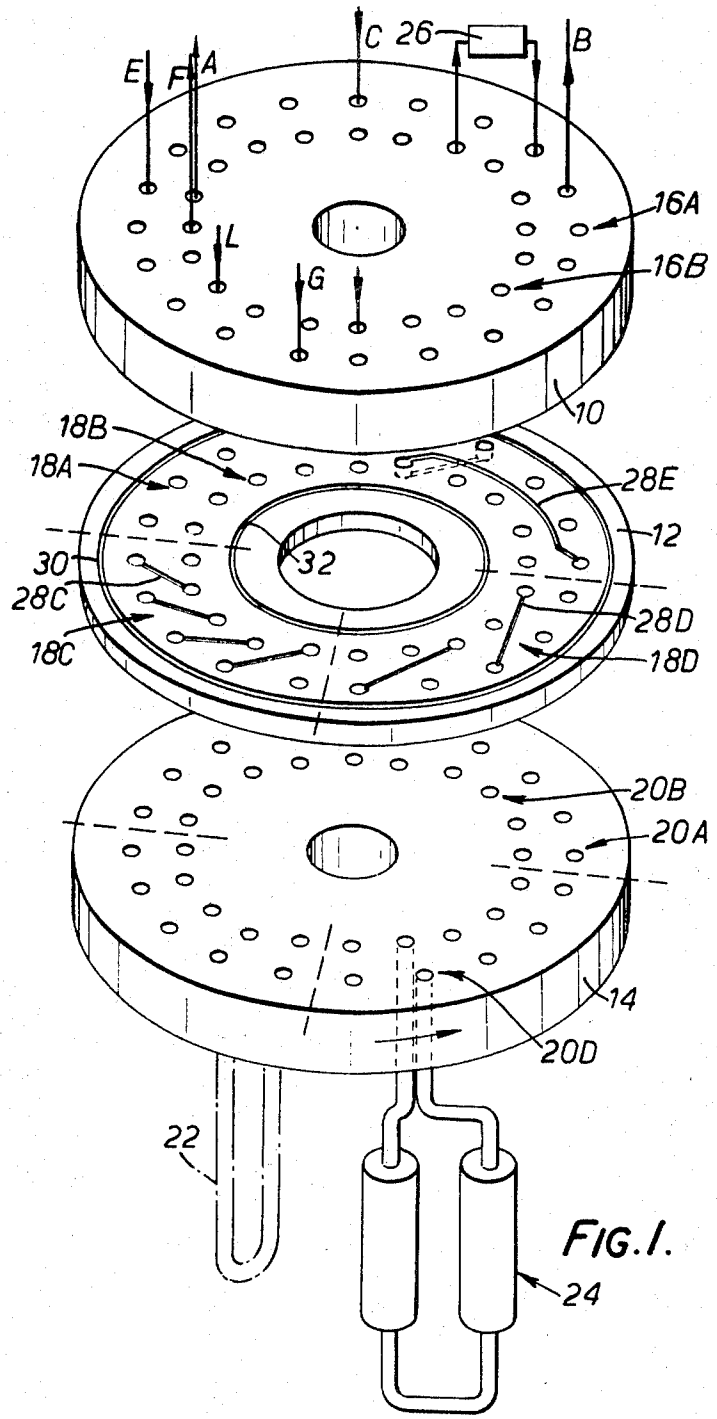
C
26
B
E
F
A
16A
L
G
16B
10
18B
18A
28E
12
30
32
28C
28D
18C
18D
20B
20A
14
20D
22
24

FIG. 1.

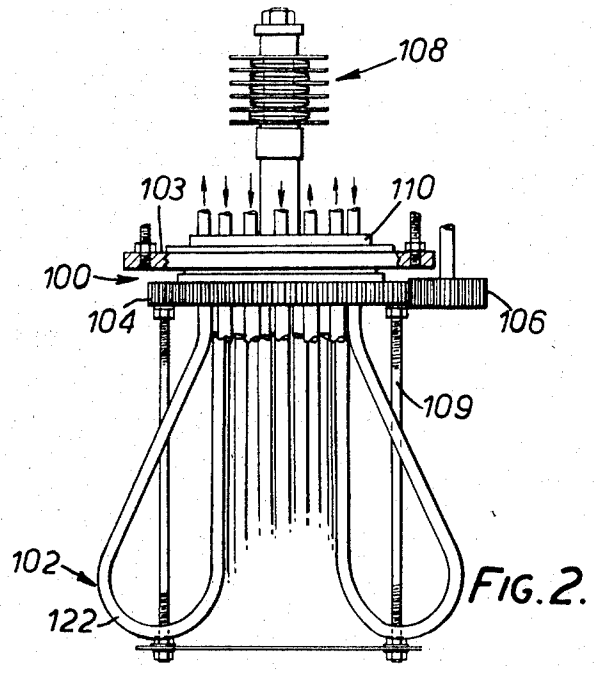
108
103
110
100
104
106
109
102
122

FIG. 2.

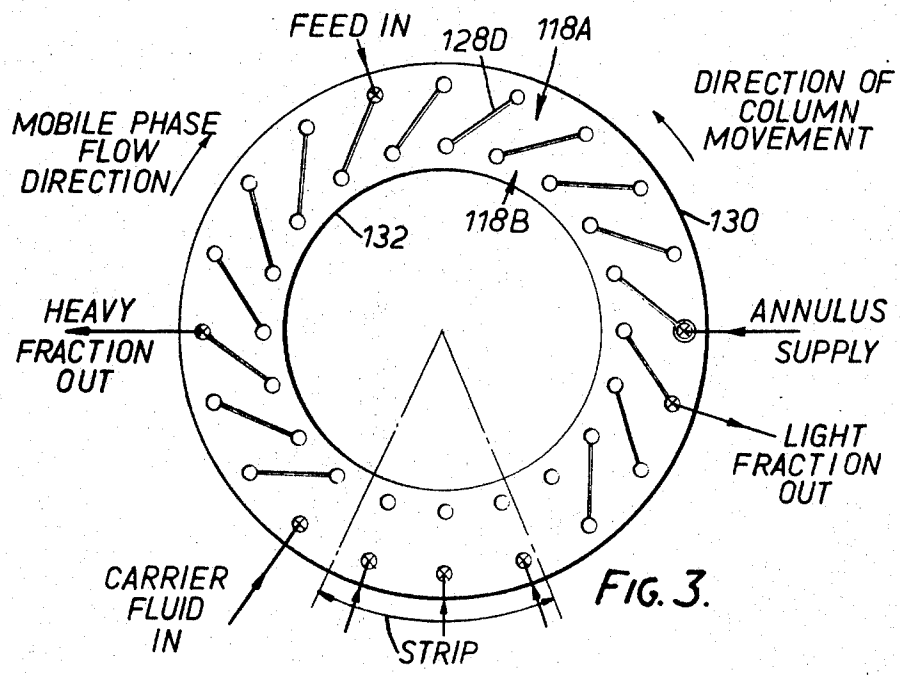
FEED IN
128D
118A
DIRECTION OF COLUMN MOVEMENT
MOBILE PHASE FLOW DIRECTION
132
118B
130
HEAVY FRACTION OUT
ANNULUS SUPPLY
LIGHT FRACTION OUT
CARRIER FLUID IN
STRIP

FIG. 3.

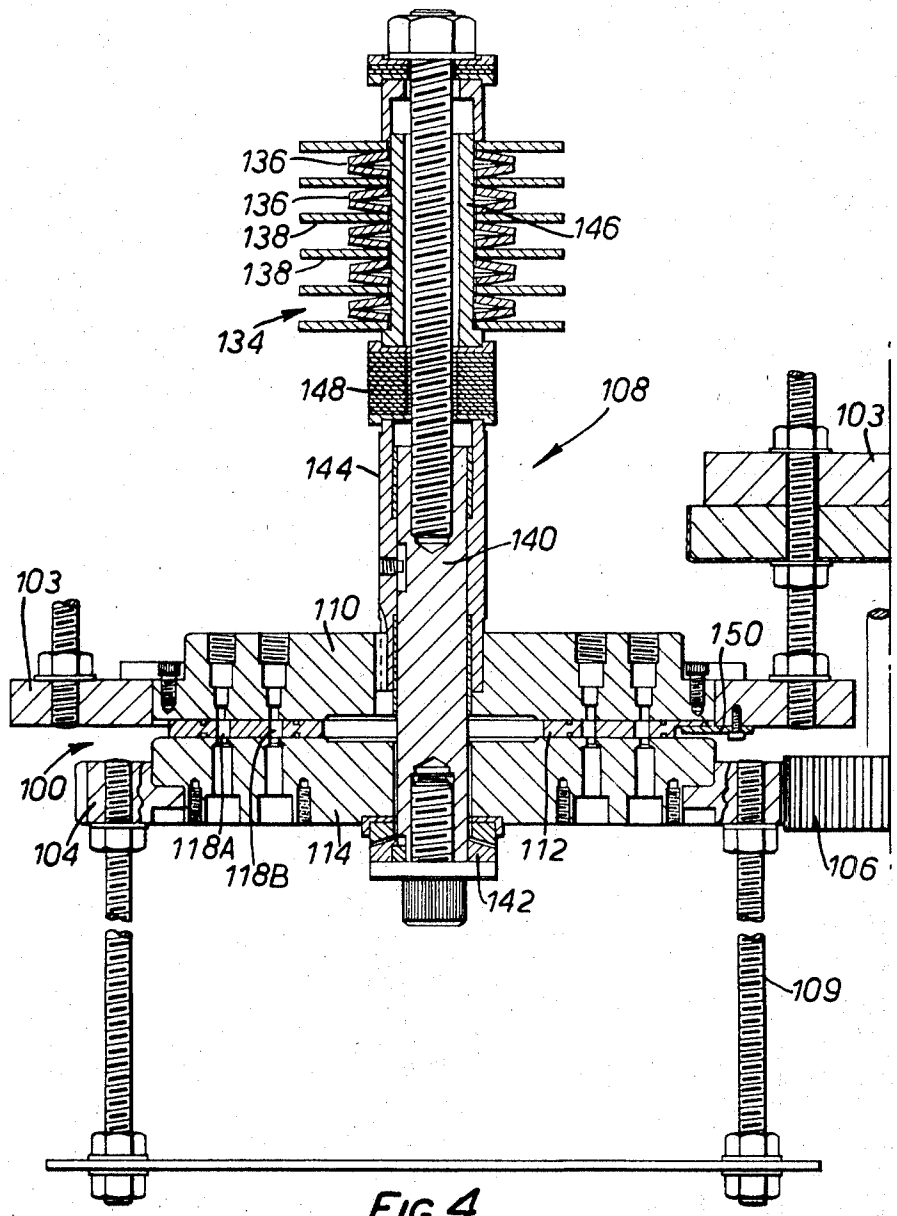
136
136
138
138
134
146
148
108
144
103
140
103
110
150
100
104
118A
118B
114
112
142
106
109

FIG. 4.

PLATE VALVES

The invention relates to a plate-valve which can be programmed to effect a prescribed sequence or cycle of fluid flow switching operations as a movable member is advanced or rotated.

The invention was made in response to a requirement for a valve which would enable the user of a particular type of chromatographic separator, a sequential separator, in which a column consisting of a number of discrete lengths with a fluid switching point between each length for the connection of inlet, take off and monitoring conduits but its usefulness is by no means confined to that application. Indeed its versatility is a major feature of the invention.

In a programmable plate valve in accordance with the invention a grooved "programme" plate is mounted between two plates for movement with one of the outer plates with respect to the other; the adjacent faces of the plates are in sealing engagement with one another. Registering sets of holes pass through the middle plate and lead out from the inner faces of the outer plates and connections are made to and between the openings in the outer plates; any hole to which no connection is required to be made in any particular programme is closed off. The intermediate plate is grooved on one or both of its faces to provide connections between holes in accordance with a prescribed programme.

In order that the invention may be more thoroughly understood a programmable plate valve in accordance with it and a sequential separator incorporating the same will be described in some detail, by way of example, with reference to the accompanying informal drawing, in which:

FIG. 1 shows the plates of the valve in an exploded isometric view and the connections and programmed grooving of the intermediate plate diagrammatically;

FIG. 2 is a side elevation of the separator;

FIG. 3 is a plan of the intermediate plate programmed for a sequential chromatographic separation; and

FIG. 4 is an enlarged vertical section corresponding to FIG. 2.

The valve shown in FIG. 1 comprises essentially three circular disc plates **10, 12** and **14**, the upper two being mounted to remain stationary and the lower plate mounted for rotation and in sealing engagement with the middle plate. In each plate there are two concentric rings **16**A, B, **18**A, B and **20**A, B of through holes, each set of holes registering with the holes of the corresponding sets in the other plates.

With the valve in use as a column switching valve for a chromatographic or like separating column comprising a series of interconnected 'U' tubes, these tubes would be connected between radially adjacent pairs of holes in the lower plate, to be carried round with it in operation. Such an arrangement is suggested by the showing of a relatively small bore U tube at **22** and a relatively larger bore tube at **24**, each would in practice be one of a series of 20 loops constituting a separating column.

External connections are made to the upper face of the upper plate **10**. Connections for the tubes are shown at A, B, C, E, F, G and L with an in-line monitor suggested at **26**.

The two series of tubes may be interconnected from A to B by way of, say, a condenser, condensate being returned at C.

Holes in the upper and lower plates having no connection are plugged.

The prescribed tube switching sequence is determined by the formation of grooves in one or both of the faces of disc plate **12**. In the arrangement suggested here the grooves **28C** between the holes marked **18C** provide for simple series connection of the small bore 'U' tubes (e.g. **22**). Only alternate pairs of holes **18D**, **20D** are used for the larger tubes (e.g. **24**), the grooves **18D** effecting series connection. The groove **28E** acts to by-pass a number of holes and tubes.

Concentric grooves **30, 32** are formed in the upper face of the plate **12**, and similar grooves are formed in the lower face, upper and lower groove pairs being interconnected. These grooves, formed on either side of the two series of holes **18A** and **18B** serve to retain fluid within the required flow path. The pressure within these concentric grooves may be maintained at suitably controlled value either above or below that in the column system, so that they can be used either to extract any material leaking across the face or to prevent outward leakage from the column switching holes.

The outer plates are preferably of metal, typically stainless steel, and the intermediate plate of plastics material, graphite loaded polytetrafluorethylene having proved particularly satisfactory as it combines the required heat resistance and chemical inertness with good lubricating, sealing and wearing properties.

The connections shown in FIG. 1 do not constitute a practical programme; they are shown to illustrate some of the numerous possibilities for the use of interchangeable "programme" plates.

Additional connections can be made, for example, for the purpose of temporary modification of a programme without changing the plate **12**, by mounting transfer loops as required in the top plate **10**, sealed through the holes in the middle plate **12**, much in the manner of an electronic patchboard.

Alternatively the programme may be cut into a thin laminate of suitable material which may be fitted between the plate **12** and the upper plate.

The entire configuration may be operated in any attitude.

The number of concentric rings of holes may be two or any multiple of two. Thus more than one "set" of sets of columns may be disposed concentrically about the same rotary valve axis.

The description of the valve given applies to its use for chromatography the separating tubes may be other forms than columns, for example, they may be percolation tubes or bubblers.

FIGS. 3 to 4 illustrate the practical application of the valve shown diagrammatically in FIG. 1 in a separator and one arrangement for a compression tower whereby the three plates are held together in the required sealing engagement.

The general arrangement of the separator is shown in FIG. 2. It comprises essentially a plate valve **100** having an upper plate **110**, intermediate plate **112** and a lower plate **114** and a column **102** consisting of 20 loop lengths of tube **122**. In use the column may be located within an oven and there will of course be the fluid supply controls, condensers, valves and monitors dictated by the particular separating process to be performed,

details of which form no part of this invention and are therefore not shown.

The upper plate **110** and the intermediate plate **112** are held stationary, being secured to a mounting structure, parts of which are indicated at **103** and the lower plate **114**, with the column **102** is mounted for rotation with respect thereto. For this purpose the lower plate carries an externally toothed ring **104** serving as a rack and engaging a pinion **106**, the latter being driven by a motor, not shown in a series steps as dictated by the programme of the separating process, under the control of suitably adjustable timing mechanism, likewise not shown.

The three plates are held in the required sealing engagement by means of a spring loaded compression tower **108**, details of which appear in FIG. **4**.

The column **102** is protected by a frame, part of the rotor, **109**, which can also serve as a stand for the assembly when removed from the apparatus.

The arrangement of the separator is for a process of sequential chromatography, that is to say a moving bed technique in which the column system, connected to multiport rotary valve, is moved up stream with respect to the mobile phase flow as the valve is indexed from one position to another in accordance with the prescribed programme.

The disposition of the holes **118**A and B and grooves **128**C, **130** and **132** in the intermediate plate **112** which is in effect a "programme" plate, for this particular process is shown in FIG. **3** and the points at which the several inlet and outlet connections are made in the upper plate **110** and their functions are also indicated, along with indication of the direction of fluid flow and column movement. The three ports in the sector marked "strip" are available for the input of stripping fluids to strip residual materials from the column loops.

Many variations of the simple programme embodied in the groove pattern shown in FIG. **3** are possible and it is convenient to work out the required pattern on a sheet bearing a diagrammatic representation of the "programme" plate **112**.

Many moving bed extractive techniques can be performed with the aid of the separator described. Thus for example the column indexing mechanism may be used to programme the operation of counter current extraction tubes or for continuous stream enrichment by reverse osmosis. The column system may be set up in an attitude that enables the column to be subjected to a range of temperatures and pressures throughout an index cycle. Gases may be processed using these techniques or component bands enriched. A product condenser may be fitted to the transfer system in order that the products from one separating system may be transferred directly to another for further separation. It is even possible for all the column loops **122** to be operated in parallel, using separately controlled carrier flows into each position.

Further details of this practical embodiment of a valve in accordance with the invention are shown in FIG. **4**. In particular this figure shows how the compression tower **108** is constructed to exert compressive force on the plate valve assembly by the action of a composite spring **134**, built up of a stack of disc springs **136** assembled in pairs separated by plain discs **138**, between a central boss **140** borne in a self-aligning journal at **142** on the lower, rotor, plate **114**, and a coaxial sleeve **144** threaded into the upper, rotor, plate **110**. The spring **134** is assembled on a housing **146** and acts upon the sleeve **144** through an insulating block **148**, the latter co-operating with the heat dissipating effect of the discs **138** to prevent overheating of the spring.

The intermediate plate is secured in correct angular orientation **112** in relation to the upper plate **110** of the stator with due allowance for differential thermal expansion by means of five radial pegs, one of which is to be seen at **150**.

It will be observed that the series of holes **118**A and **118**B in the plate **112**, which is fabricated in graphite loaded polytetrafluorethylene, are larger than the registering series in the upper and lower plates and that they pitched on somewhat shorter radii; this is to allow for differential thermal expansion between the plastics material of the plate **112** and the stainless steel in which the outer plates are fabricated.

The present invention may be embodied in other specific forms without departing from the spirit or essential attributes thereof and, accordingly, reference should be made to the appended claims, rather than to the foregoing specification as indicating the scope of the invention.

I claim:

1. A plate valve which can be programmed to effect a prescribed sequence of fluid switching operations as a movable member is moved comprising, first and second outer plates, an intermediate plate disposed between said first and second outer plates, means coupling said intermediate plate to one of said outer plates for movement therewith relative to the other of said outer plates, adjacent faces of said three plates being in fluid-tight sealing engagement, a set of holes extending through said intermediate plate, sets of holes in both of said outer plates, said sets of holes in said outer plates being registrable with said holes in said intermediate plate so that at least some of said holes in said outer plates can be placed in fluid communication with each other through the holes in said intermediate plate, external fluid flow connections coupled to said openings in said outer plates, and said intermediate plate being grooved on at least one of its faces to provide for a fluid transfer between respective holes in said intermediate plate.

2. A valve in accordance with claim **1** wherein said holes in said intermediate plate are larger than those in said outer plates.

3. A valve in accordance with claim **1** wherein said plates are circular discs, coaxially mounted for rotation of said one outer plate and said intermediate plate with respect to said other of said outer plates.

4. A valve in accordance with claim **3** wherein said holes are disposed in concentric rings.

5. A valve in accordance with claim **4** wherein said intermediate plate comprises concentric grooves in at least the face of said plate which engages said relatively movable outer plate, respective concentric grooves being disposed radially inwardly and radially outwardly of said holes to sealingly retain liquid between said grooves.

6. A valve in accordance with claim **5**, and compression spring means coupled to said outer plates and acting coaxially with respect to said plates to apply a compressive force to said plates.

7. A valve in accordance with claim **3**, and compression spring means coupled to said outer plates and act-

ing coaxially with respect to said plates to apply a compressive force to said plates.

8. A valve in accordance with claim **1** wherein at least one face of said intermediate plate is of thin laminate material, and laminate having grooves to provide for the said fluid transfer between respective holes in said intermediate plate.

9. In a sequential separator apparatus, a programmable plate valve comprising first and second outer plates, an intermediate plate disposed between said first and second outer plates for movement with one of said outer plates with respect to the other of said outer plates, adjacent faces of said three plates being in fluid-tight sealing engagement, a set of holes extending through said intermediate plate, sets of holes in said outer plates, said sets of holes in said outer plates being registrable with said holes in said intermediate plate so that at least some of said holes in said first and second outer plates can be placed in fluid communication with each other through the holes in said intermediate plate, external fluid flow connection means coupled to openings in said outer plates, and said intermediate plate being grooved on at least one of its faces to provide for fluid transfer between respective holes in said intermediate plate.

10. In sequential separator apparatus in accordance with claim **9**, said plates being circular discs, coaxially mounted for rotation of said one outer plate and said intermediate plate with respect to said other of said outer plates.

* * * * *