Dec. 26, 1950 L. A. ROGGENSACK 2,535,956

METHOD OF FORMING SCREW JACKS WITH CONCRETE BASES

Filed Sept. 24, 1945 2 Sheets-Sheet 1

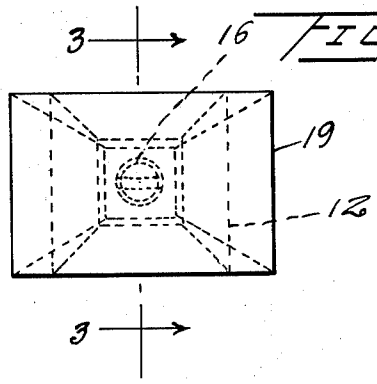

Fig. 1.

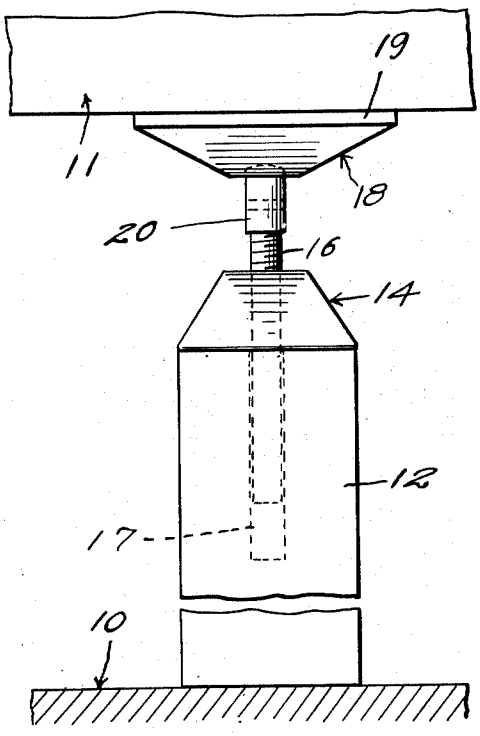

Fig. 2.

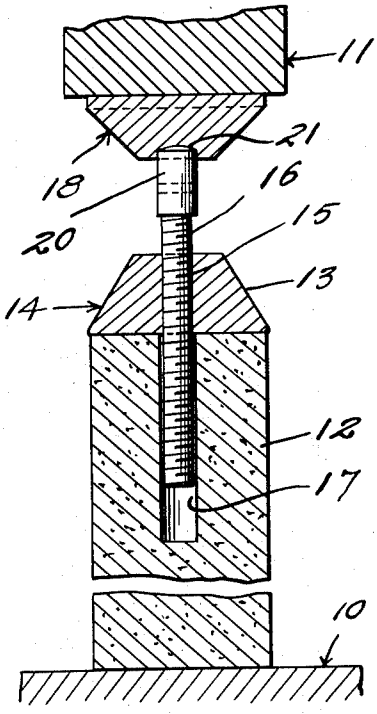

Fig. 3.

Inventor

L. A. Roggensack

By Kimmel & Crowell

Attorneys

Dec. 26, 1950 L. A. ROGGENSACK 2,535,956

METHOD OF FORMING SCREW JACKS WITH CONCRETE BASES

Filed Sept. 24, 1945 2 Sheets-Sheet 2

Fig. 4.

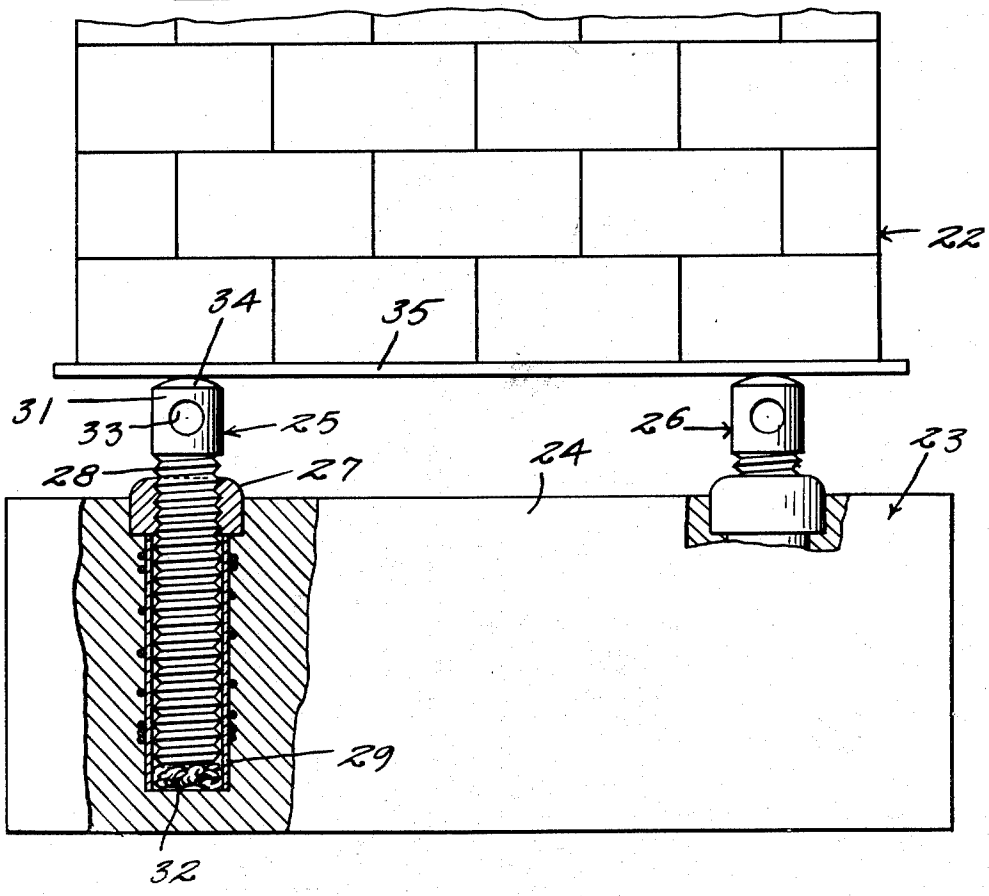

Fig. 5.

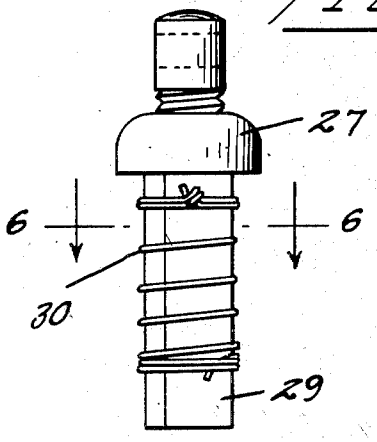

Fig. 6.

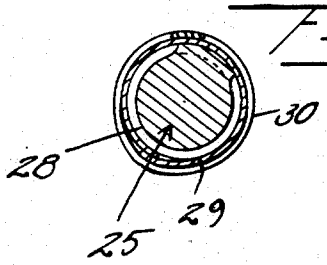

Inventor

L. A. Roggensack

By

Kimmel & Crowell Attorneys

Patented Dec. 26, 1950 2,535,956

UNITED STATES PATENT OFFICE

2,535,956

METHOD OF FORMING SCREW JACKS WITH CONCRETE BASES

Lutie A. Roggensack, Fargo, N. Dak.

Application September 24, 1945, Serial No. 618,308

1 Claim. (Cl. 25—155)

1

This invention relates to an adjustable chimney base and floor leveler.

An object of this invention is to provide a structure which is designed particularly for leveling or raising of floors or the like.

In building constructions it is not infrequent that portions of the lower floor will sag due to various conditions, causing cracking of inner walls and sinking of the floors. It is, therefore, an object of this invention to provide a structure in combination with a supporting post which is adapted to be positioned beneath the sunken floor and which may be adjusted to raise the floor to its original position, the structure being permanently left in position. It is, therefore, a further object of this invention to provide a structure which is simple in construction and can be sturdily built at small cost.

Another object of this invention is to provide an improved adjustable chimney base structure for use beneath a chimney whereby any settling or tilting of the chimney can be corrected.

With the foregoing objects and others which may hereinafter appear, the invention consists of the novel construction, combination and arrangement of parts as will be more specifically referred to and illustrated in the accompanying drawing, but it is to be understood that changes, variations and modifications may be resorted to which fall within the scope of the invention as claimed.

In the drawings:

Figure 1 is a detail top plan of a structure constructed according to an embodiment of this invention.

Figure 2 is a detail side elevation partly broken away of the device.

Figure 3 is a vertical section taken substantially on the line 3—3 of Figure 1.

Figure 4 is a detail side elevation partly broken away, of the adjustable chimney base constructed according to an embodiment of the invention.

Figure 5 is a side elevation of one of the leveling devices showing the sleeve wrapped thereabout.

Figure 6 is a section on line 5—5 of Figure 5.

Referring to the drawing, the numeral 10 designates a floor and the numeral 11 designates a supporting joist or beam above the floor and supporting an upper floor structure. In a building where the beam or joist 11 sags so as to permit the inner walls of the building to sag and crack, it is desirable that some additional support be interposed between the basement floor level 10 and the joist or supporting beam 11.

2

In order to provide a means whereby the walls and the floor supported from the beam 11 may be brought up to their original normal condition or position, I have provided an upright post or support 12 which is positioned on the upper surface of the basement floor 10. The post 12 may be of any suitable construction, such as either concrete or wood, and a leveling structure generally designated as 14 is interposed between the upper end of the post 12 and the lower side of the beam 11.

The floor leveling means 14 includes a nut or base member 13 which is formed with a threaded opening 15 extending vertically therethrough. The base or nut member 13 is of substantially truncated pyramidal configuration having the base thereof lowermost and seated on the upper end of the supporting post 12. A threaded shaft 16 engages the interior threads of the nut 13 and is of a length to extend downwardly into the post 12. The post 12 is provided with an upwardly opening socket 17 so that the shaft 16 may at least initially be positioned within the socket 17.

An upper pressure plate or body 18 is adapted to engage the lower side of the beam 11 and is of substantially truncated pyramidal configuration with the base 19 thereof uppermost. The shaft 16 at its upper end is provided with a head 20 which is adapted to rotatably engage in a recess or socket 21 formed in the lower small end of the pressure member 18.

The head 20 may be either round in transverse section, or if desired may be provided with suitable nut faces for engagement of a wrench therewith. Where the head 20 is round, a conventional pipe wrench is engaged therewith so as to provide for rotation and extension of the shaft 16.

Referring now to Figures 4 to 6 inclusive, the numeral 22 designates generally the lower portion of a chimney and the numeral 23 designates generally an adjustable chimney base structure by means of which the chimney may be leveled, raised or otherwise adjusted either during or after the construction of the chimney. The structure 23 includes a base block 24 which may be formed of concrete or the like, and which may be partially or substantially entirely embedded in the ground. In order to provide a means whereby the lower end of the chimney 22 may be properly supported from the base 24, I have provided a pair of jack screws 25 and 26 which are of like construction. The jack screw 25 is threaded through a nut 27 which is em-

bedded in the upper portion of the base block 24 and in order to provide an opening by means of which the screw shaft 28 of the structure 23 may be extended into the block 24 during the formation of the block 24, the screw shaft 28 has a sleeve 29 wrapped thereabout. The sleeve 29 may be formed of water-proof material which has a degree of rigidity and the sheet is wrapped about the screw shaft 28, being held thereabout by means of cord or a flexible clamping means 30.

At the time the block 24 is to be poured the screw shaft 28 is threaded substantially entirely through the nut 27 so that the head 31 thereof will be in substantial contact with or closely adjacent the upper side of the nut 27. The plastic concrete is held against entering the lower end of the sleeve 29 by means of packing 32 which is inserted in the lower end of the sleeve and engages against the lower end of the screw shaft 28. The head 31 of the jack screw is provided with an opening 33 by means of which a bar may be extended therethrough so as to turn the screw 28 either up or down to effect adjustment of the chimney 22. The upper end of the head 31 is formed with a convex surface 34 and engages against the lower side of a plate 35 formed of metal which is interposed between the heads of the two jack members 25 and 26 and the lower end of the chimney 22.

In the use and operation of this leveling device, the post 12 is disposed beneath the beam 11 at substantially the lowermost point of the beam 11. The shaft 16 is initially threaded downwardly through the nut 13 and extended into the socket 17. The pressure head or plate 18 is positioned on the upper end of the head 20, whereupon the shaft 16 may be rotated to provide for the extension of the shaft from the nut 13. Rotation of the shaft 16 will force the pressure plate 18 upwardly and the beam 11 may thereupon be raised to the desired point by rotation of the shaft 16 to the desired degree.

Where the head 20 is round, this head may be engaged by a pipe wrench, whereas where the head is formed with nut faces, the head may be engaged by a conventional wrench of suitable size. The socket or recess 21 in the upper member 18 will prevent slipping of the head 20 with respect to the upper member 18. The structure hereinbefore described is left in position to form a permanent support for the beam 11.

In the use of the adjustable chimney base structure shown in Figures 4, 5 and 6 the base block 24 is set in the ground or in the desired location forming a firm foundation for the chimney 22 which extends thereabove. During the setting

of the block 24 the jack members 25 and 26 are threaded substantially entirely through the nuts 27 and the protecting covering 29, which may be formed out of a flat sheet and wrapped in cylindrical form about the screw shaft, is bound by the cord 30 about the screw shaft with the wadding 32 at the lower end thereof. The members 25 and 26 are spaced apart a substantial distance so as to be positioned adjacent the opposite vertical edges of the chimney 22. The plate 35 during the construction of the chimney 22 may be supported in any desired manner so as to be horizontal and engaging against the convex upper ends or sides of the heads 31. In the event the chimney 22 tilts or sags due to sinking of the base block 24, the chimney may be raised by turning the jack screws and if the chimney tilts, the desired one of these jack screws may be raised or lowered so as to level the chimney. This jack structure is left beneath the chimney after it has been completed so that the chimney can be maintained at the desired height and held against tilting at any time after the chimney has been built.

It will be understood that there are at least four leveling devices used although only two are shown and described and that these will be positioned to equally support the floor or chimney base.

What I claim is:

The method of forming a screw jack structure with a concrete base which includes encasing the screw of the jack in a covering, disposing the nut for the screw at the upper end of the covering, and extending the covered screw and at least a portion of the nut into the concrete while the concrete is plastic whereby the nut will be anchored in the concrete and the screw will be free to rotate through the nut and within the covering.

LUTIE A. ROGGENSACK.

REFERENCES CITED

The following references are of record in the file of this patent:

UNITED STATES PATENTS

Number	Name	Date
792,049	Kheil	June 13, 1905
913,875	Cleverdon et al.	Mar. 2, 1909
1,256,849	Vaudreuil	Feb. 19, 1918
1,301,959	Merrick	Apr. 29, 1919
1,799,697	Moody	Apr. 7, 1931
2,158,018	Wittman et al.	May 9, 1939
2,247,510	Lefebure	July 1, 1941