Jan. 16, 1951 J. W. CHAMBERLIN 2,538,667

WASHER AND CENTRIFUGAL DRIER

Filed Aug. 24, 1946 2 Sheets-Sheet 1

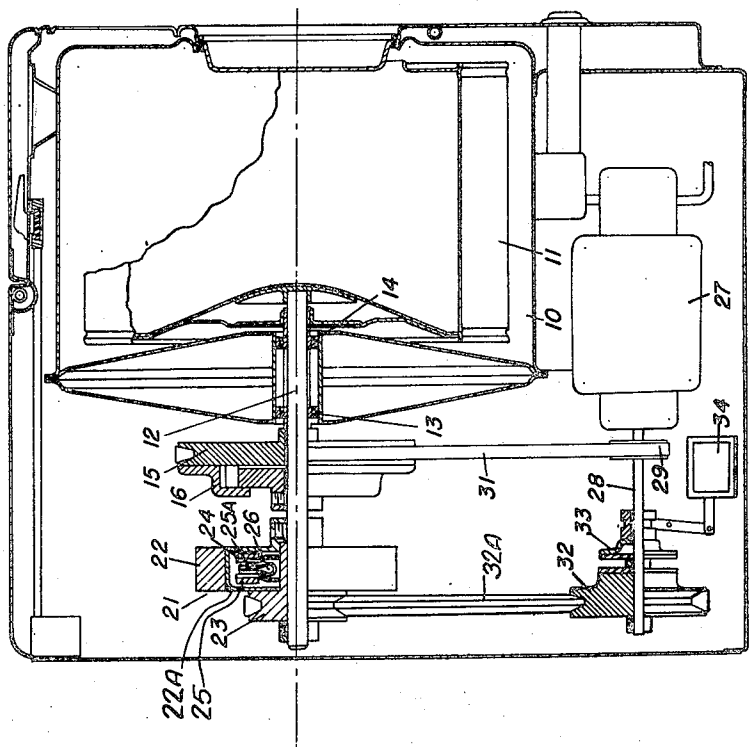

FIG. 1

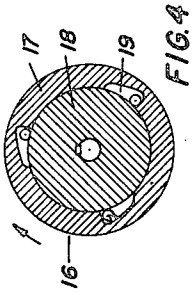

FIG. 4

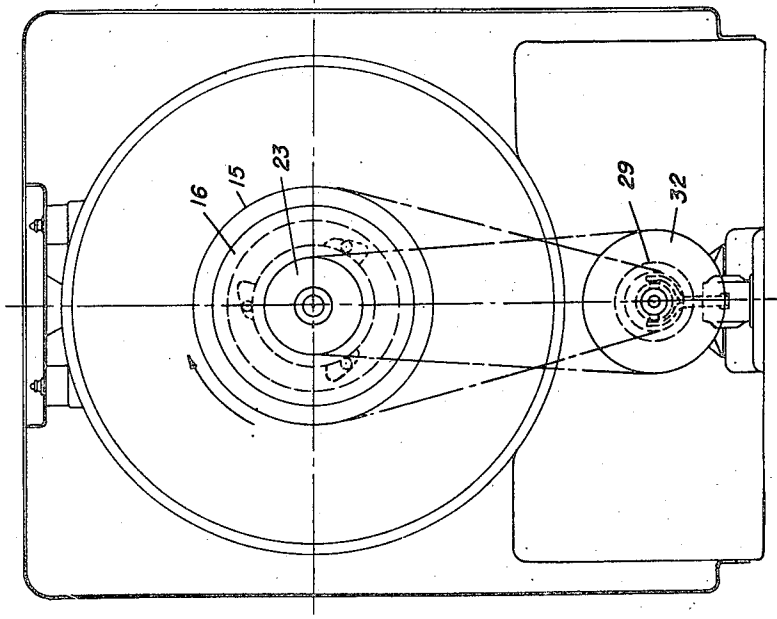

FIG. 2

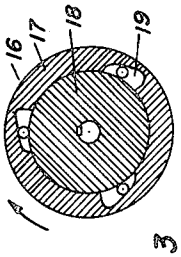

FIG. 3

INVENTOR
JOHN W. CHAMBERLIN
BY M. W. Grossman
ATTORNEY

Jan. 16, 1951 J. W. CHAMBERLIN 2,538,667

WASHER AND CENTRIFUGAL DRIER

Filed Aug. 24, 1946 2 Sheets-Sheet 2

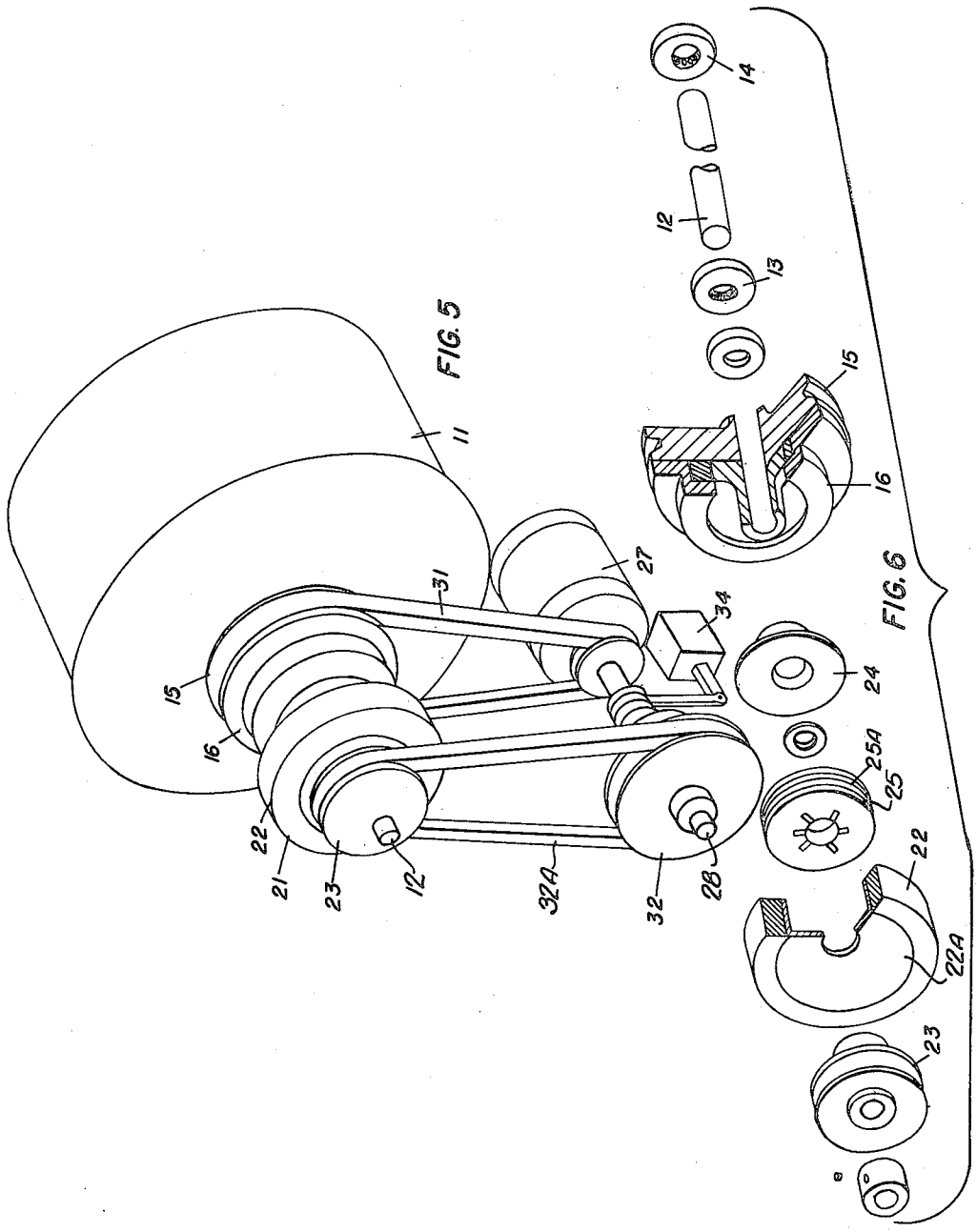

INVENTOR
JOHN W. CHAMBERLIN
BY M. W. Green
ATTORNEY

Patented Jan. 16, 1951 2,538,667

UNITED STATES PATENT OFFICE

2,538,667

WASHER AND CENTRIFUGAL DRIER

John Windsor Chamberlin, Mequon, Wis., assignor to Bendix Home Appliances, Inc., South Bend, Ind., a corporation of Delaware

Application August 24, 1946, Serial No. 692,867

5 Claims. (Cl. 74—217)

1

This invention relates to a combined machine for washing and centrifugal drying of textiles.

It is a primary object of the invention to provide an improved mechanism capable of rotating a clothes containing cylinder at a speed suitable for washing followed by an acceleration of the speed of rotation sufficiently to provide centrifugal force necessary for extracting washing liquid from the clothes carried in the cylinder.

It is a further object to provide a mechanism using the energy of a spinning flywheel to assist in accelerating a clothes containing cylinder to a higher rotative speed and to stabilize the vibrations of the cylinder during acceleration from washing speed to extraction speed and during extraction.

The above and other objects of the invention will appear more fully from the following more detailed description and by reference to the accompanying drawings forming a part hereof and wherein:

Figure 1 is a vertical cross section of the machine in side view.

Figure 2 is a rear view of the machine showing the drive mechanism.

Figure 3 is a section through the overrunning clutch in the position it assumes during slow speed or washing operation.

Figure 4 is also a section through the overrunning clutch but in this case the mechanism is in the position it assumes during drive for high speed centrifugal operation.

Figure 5 is a perspective view of the clothes cylinder and drive mechanism therefor.

Figure 6 is an exploded view of the drive mechanism and parts thereof.

Referring to the drawings, Figure 1 shows a combined washing and centrifugal extracting machine of the so-called horizontal axis type having a tub 10 designed to contain washing liquid and a rotatable, preferably perforated, clothes cylinder 11 mounted for rotation therein. The cylinder 11 is supported upon a shaft 12 which rotates in spaced bearings 13 and 14. A drive pulley 15 is mounted on the extending portion of shaft 12 and is free to rotate on said shaft. The pulley 15 is arranged to drive the shaft 12 through a one-way drive connection 16 of the conventional ball or roller type. Cross sections of such one-way drive connection 16 are shown in Figures 3 and 4 and the unit comprises an outer sleeve driving member 17 and an inner driven member 18. Tapered roller retainer guides 19 are cut in the outer sleeve member 17 so that on rotation of the sleeve driving member 17 in a

2

clockwise direction, as viewed in Figures 3 and 4, the rollers will tend to move to the small end of the tapered guides 19 to lock the driving sleeve 17 to the driven member 18 and therefore to rotate the shaft 12 with the pulley 15 since member 18 is secured to shaft 12. However, in case the inner member 18 is the driving member the rollers will tend to be moved to the open ends of the guides 19 and the result will be the free rotation of the member 18 and the shaft 12 relative to the pulley 15. Also mounted on the shaft 12 is a mercury clutch and flywheel assembly 21 of the type more particularly shown and described in U. S. Patent No. 2,452,008. In this assembly a flywheel 22 is rotatable with and connected to a pulley 23 and a clutch plate 24 is secured to rotate with the shaft 12. Between the clutch plate 24 and the pulley 23 there is a mercury expander unit made up of an annular pocket 26 containing a heavy material such as mercury and the disc members 25 and 25A on either side of the annular pocket 26. Upon rotation of the unit containing the flywheel 22 at a sufficiently high speed the mercury normally carried in the annular pocket 26 will be thrown outward toward the outer periphery of the unit and by such movement will expand the two discs 25 and 25A. As can be seen on reference to Figure 1, such expansion will force the disc 25 to contact the wall 22A of the flywheel 22 and will force the disc 25A to contact the clutch plate 24 which is secured to the shaft 12, thus clutching the pulley and flywheel assembly 21 with the shaft 12 and requiring the pulley 23 to rotate the shaft 12.

In the operation of the machine clothes to be washed are inserted in the front of the machine through the clothes door as shown and carried in the perforated clothes cylinder 11. Suitable mechanism forming no part of the present invention may be provided to cause suitable washing liquid to be admitted and carried in the tub 10 near the bottom of the clothes cylinder 11. During the washing operation the solenoid 34 is not actuated and therefore the motor 27 rotates the shaft 12 through pulley 29 and pulley 15. The clothes cylinder 11 is therefore rotated at a relatively slow rate of rotation for washing through the connection of pulley 15 to the shaft 12 by the one-way drive connection 16. Such rotation continues for the time necessary for washing and when it is desired to increase the speed of rotation of the cylinder to a speed of rotation high enough for centrifugal extraction, the solenoid 34 is actuated. Such actuation of the solenoid 34 as previously described moves the clutch mem-

ber 33 toward the pulley 32 causing such pulley to be clutched to rotate with the shaft 28. Such result causes the pulley 23 on the shaft 12 to be started in rotative motion and because such pulley 23 is secured to the flywheel 22 this flywheel will be set in motion. In view of the fact that the mercury clutch 25 does not operate until sufficient centrifugal force is generated the flywheel will be accelerated prior to the time that the clutch 25 operates to clutch the flywheel 22 and pulley 23 to shaft 12. At this time it should be noted that the one-way drive connection 16 shown in Figures 3 and 4 acts as an overrunning clutch. Therefore the energy of the rotating flywheel is made available for accelerating the cylinder 11 and such acceleration is accomplished in a shorter time than would be possible to accomplish such acceleration if the cylinder 11 with its possibly unbalanced load were thrown upon the drive without the assistance of the rotating flywheel 22. The fact that the flywheel 22 is an evenly distributed unit makes its acceleration relatively less difficult than the cylinder 11 and therefore the mechanism is accelerated with less difficulty than would normally be the case without the assistance of the flywheel 22.

Although the invention has been described by reference to a specific structure it is intended that various modifications may be made without departing from fundamental principles herein disclosed and within the scope of the following claims.

I claim:

1. In a mechanism for driving a rotatable unit at low and high speeds, a drive shaft adapted to drive said rotatable unit, drive means for rotating said rotatable unit at a low speed, a one-way drive connection for connecting said mechanism with said shaft, a flywheel mounted for rotation on said drive shaft, centrifugally operated clutch means for connecting said flywheel with said shaft, means to drive said flywheel including clutch means for starting said inertia flywheel in rotation prior to the operation of said centrifugally operated clutch means.

2. In a mechanism for driving a rotatable unit at low and high speeds, a drive shaft adapted to drive said rotatable unit, drive mechanism for rotating said shaft at low speed, a one-way drive connection for connecting said drive mechanism to rotate said shaft and rotatable unit, a flywheel rotatable relative to said shaft, and clutch means operable only after said flywheel has been started in rotation to connect said flywheel for rotation with said shaft and thereby to make available the inertia of said flywheel for acceleration of said shaft and unit in their rotation.

3. In a mechanism for driving a rotatable unit at low and high speeds, drive means for rotating said unit at a low speed, further drive mechanism for accelerating said unit to a high speed, such mechanism comprising an inertia flywheel and means to bring said inertia flywheel to a speed of rotation substantially above said low speed independently of the rotation of said unit, further means to connect said inertia flywheel to rotate with said unit and to assist in acceleration thereof, said connecting means comprising a clutch operable by centrifugal force to cause connection of said flywheel to rotate said unit.

4. In a drive mechanism for a rotatable member, a means to accelerate a rotating member from low speed washing rotation to higher speed extraction rotation, said means comprising a flywheel and means to rotate said flywheel before connection with said rotating member and further mechanism to connect said flywheel with said rotating member, said connecting mechanism comprising a container for mercury or other heavy liquid contained in said flywheel, expansion members adjacent said container which will be expanded by movement of said mercury caused by centrifugal force developed by rotation of said flywheel, said expansion members being adapted to contact and clutch said rotating member with said flywheel upon the expansion of said expansion members.

5. In a drive mechanism for a rotatable unit, a drive motor; a rotating mechanism for connecting said drive motor to rotate said rotatable unit at a low speed; an inertia flywheel; means to rotate said flywheel at a speed for centrifugal extraction; centrifugally operated clutch means for connecting said rotating inertia flywheel to rotate said rotatable unit, said clutch means comprising a mercury container in said flywheel, said mercury container being of such a nature as to permit centrifugal force to move said mercury toward the outer circumference of said flywheel during high speed rotation to actuate or engage said clutch.

JOHN WINDSOR CHAMBERLIN.

REFERENCES CITED

The following references are of record in the file of this patent:

UNITED STATES PATENTS

Number	Name	Date
1,857,017	Gotz	May 3, 1932
2,337,586	Bowen	Dec. 28, 1943
2,392,947	Reed	Jan. 15, 1946
2,452,008	Wickwire et al.	Oct. 19, 1948