C. T. REISNER.

SHADE AND CURTAIN BRACKET.

APPLICATION FILED OCT. 15, 1913.

1,098,839. Patented June 2, 1914.

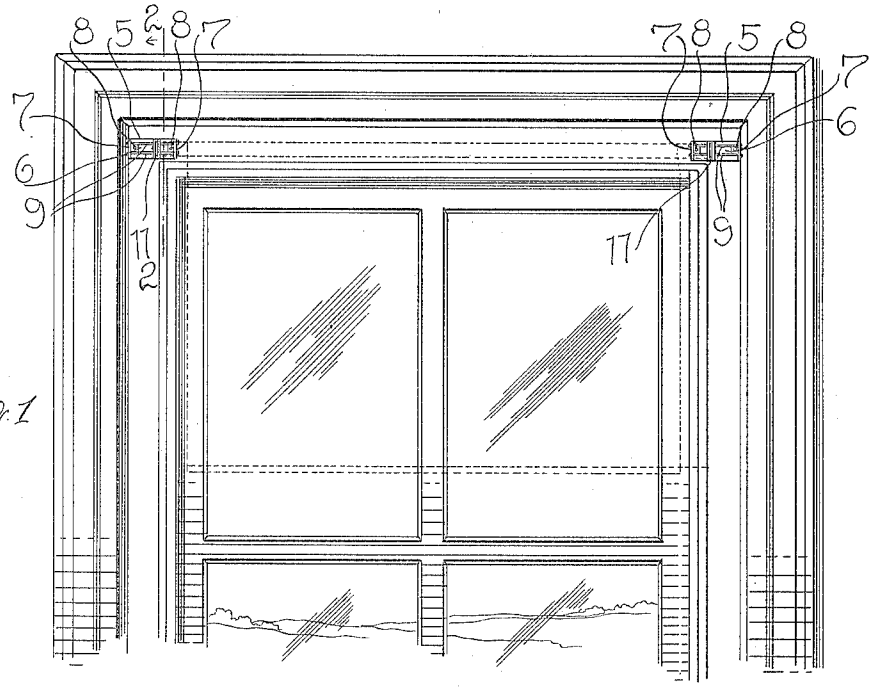

Fig. 1

Fig. 2

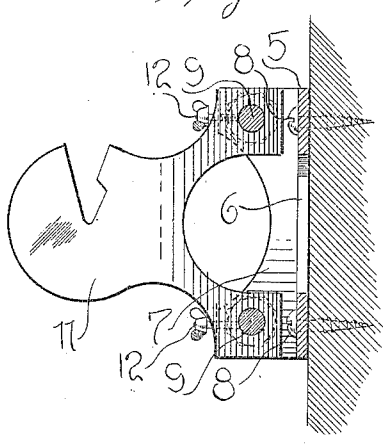

Fig. 3

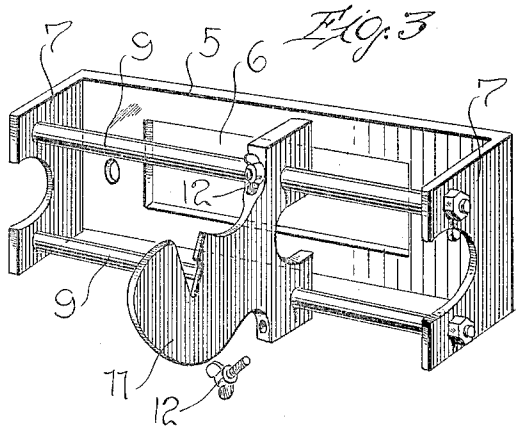

Inventor

C. T. REISNER

Witnesses

Robert M. Lutyhew

V. J. Dowrick.

By Watson E. Coleman

Attorney

COLUMBIA PLANOGRAPH CO., WASHINGTON, D. C.

UNITED STATES PATENT OFFICE.

CARL T. REISNER, OF WACO, TEXAS.

SHADE AND CURTAIN BRACKET.

1,098,839. Specification of Letters Patent. Patented June 2, 1914.

Application filed October 15, 1913. Serial No. 795,328.

To all whom it may concern:

Be it known that I, CARL T. REISNER, a citizen of the United States, residing at Waco, in the county of McLennan and State of Texas, have invented certain new and useful Improvements in Shade and Curtain Brackets, of which the following is a specification, reference being had to the accompanying drawings.

This invention relates to certain improvements in shade or curtain brackets and has for its primary object to provide a very simple and convenient device of this character whereby the brackets at opposite sides of the window frame may be quickly and easily adjusted to receive shade rollers or curtain poles of various lengths.

Another and more specific object of the invention resides in the provision of a base plate having flanges formed upon its ends, spaced parallel rods secured in said flanges, a bracket member slidable upon said rods and means for securing said bracket member in its adjusted position.

My invention has for a further object to provide a device of the above character which is simple and inexpensive in construction, neat in appearance and highly convenient and serviceable in practical use.

With the above and other objects in view, the invention consists in the novel features of construction and the combination and arrangement of parts to be hereinafter more fully described, pointed out in the claim and shown in the accompanying drawing, in which—

Figure 1 is an elevation of the upper portion of a window frame showing my improved shade bracket applied thereto; Fig. 2 is a section taken on the line 2—2 of Fig. 1; Fig. 3 is an enlarged perspective view of one of the brackets.

Referring in detail to the drawings, 5 designates a base plate which, for the sake of economy, has its central body portion cut out, as indicated at 6. This plate is adapted to be stamped out of a single sheet of metal and is provided upon its ends with the flanges 7. The body of the plate adjacent each end thereof is provided with an opening to receive the fastening screws 8.

Parallel longitudinally extending rods 9 are fixed at their ends in the flanges 7 and upon these rods the bracket member, indicated at 11, is loosely mounted for sliding movement. This bracket member may be of the ordinary construction now in general use, and the same is provided at its upper and lower ends with the set screws 12 which are threaded therein and adapted for binding engagement against the respective rods 9.

It will be obvious, from the foregoing description that the brackets at opposite sides of the frame are capable of quick and easy adjustment by simply sliding the same upon the rods 9 until the brackets are spaced apart a sufficient distance to receive the trunnions in the ends of the shade roller. Of course, it is obvious that the ordinary curtain pole bracket may be substituted for the brackets illustrated in the drawing. After the brackets have been thus adjusted upon the rods 9, they are securely fixed in position by means of the set screws 12.

From the foregoing it will be seen that I have produced a very simple and convenient mounting for the shade bracket whereby the same may be adjusted when desired without in any way marring the facings of the frame as is the case in the use of the ordinary bracket attached by means of screws directly to the frame.

It will be apparent that the base plate may be made in various ornamental designs and I do not, therefore, desire to be limited to the specific form of this plate illustrated in the drawing. It is further to be understood that the invention is susceptible of a great many other modifications in the form, proportions and arrangements of the several parts and I, therefore, reserve the right to resort to all such legitimate changes as may fairly fall within the spirit and scope of my invention as claimed.

What I claim is:—

The hereindescribed bracket holder including a base plate having its ends disposed at right angles to the body portion of the plate, spaced parallel rods removably mounted at their ends in the angular ends of said plate and in spaced relation to the body thereof, a bracket member consisting of a roller supporting body plate having oppositely extending spaced enlargements formed upon one end and provided with openings

to loosely receive the respective rods, whereby said member may be longitudinally adjusted, and set screws threaded in the enlarged portions of the bracket member for binding engagement with said rods to secure said member in its adjusted position upon the rods.

In testimony whereof I hereunto affix my signature in the presence of two witnesses.

CARL T. REISNER.

Witnesses:
J. McCUNE,
K. K. KENNON.

Copies of this patent may be obtained for five cents each, by addressing the "Commissioner of Patents, Washington, D. C."