May 12, 1942. H. J. LURK ET AL 2,282,975

TELEPHONE SYSTEM

Filed Jan. 28, 1939

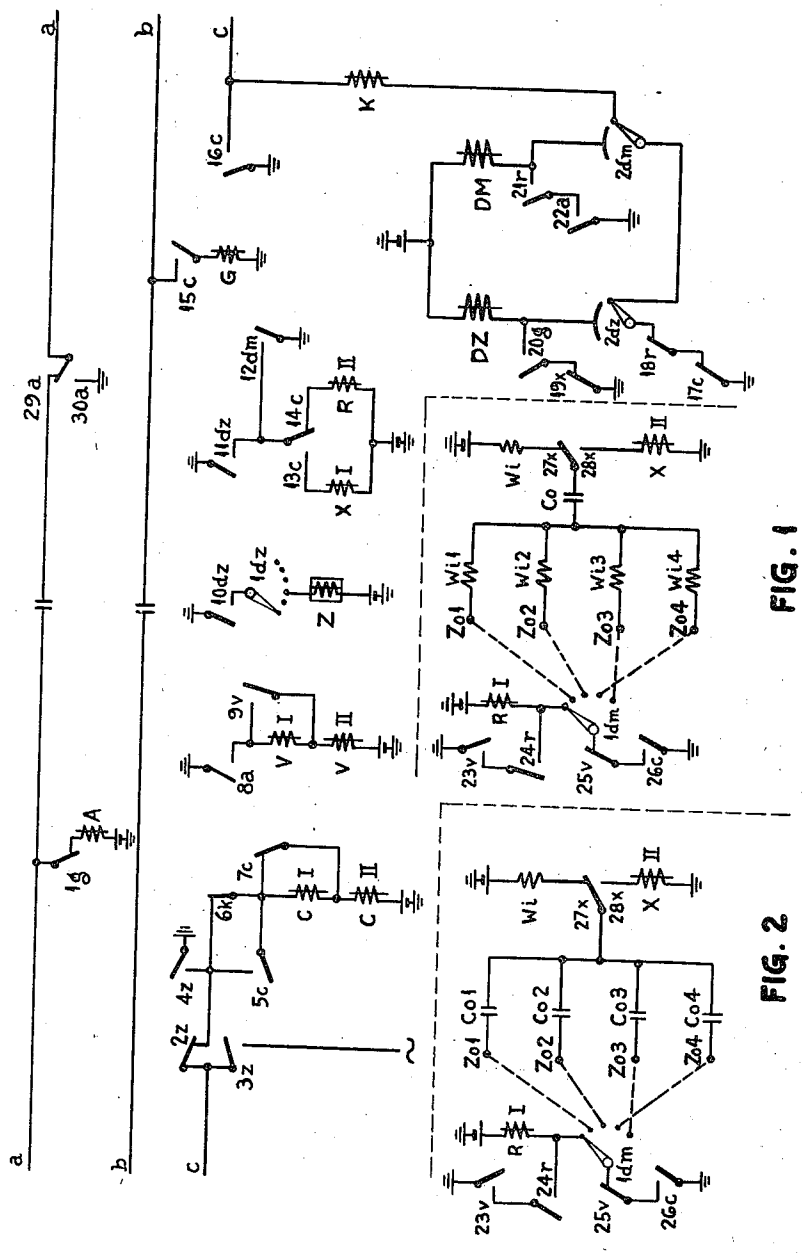

FIG. 1

FIG. 2

INVENTOR.
HANS JOACHIM LURK
FELIX BLOCH

BY Chas. Tu. Candy

ATTORNEY.

Patented May 12, 1942 2,282,975

UNITED STATES PATENT OFFICE

2,282,975

TELEPHONE SYSTEM

Hans Joachim Lurk, Berlin-Siemensstadt, and Felix Bloch, Berlin-Charlottenburg, Germany, assignors to Fides Gesellschaft für die Verwaltung und Verwertung von gewerblichen Schutzrechten m. b. H., Berlin, Germany

Application January 28, 1939, Serial No. 253,268
In Germany February 24, 1938

7 Claims. (Cl. 179—7.1)

The present invention relates to a circuit arrangement for time zone metering in remote signalling, in particular telephone installations, in which the number of metering impulses to be sent out is determined by a time switch driven at different velocities according to the value of the connection.

It concerns the metering of connections according to the time and zone by the simplest means without provisions of special devices controlled by a clock or similar auxiliary devices for time determination, and to do this the time between the individual stepping on movement of the time switch is determined by means of a relay whose release period is altered according to the zone.

In Fig. 1 an embodiment of the invention is shown. All devices and switch means not completely necessary for the understanding of the invention are left out for the sake of simplicity.

Fig. 2 shows a second embodiment of the invention.

The operations according to Fig. 1 are as follows:

In the normal position of the system the relay K of the repeater shown in the drawing is energized: earth, contact 17*c*, 18*r*, wipers 2*dz*, 2*dm*, both in the normal position, winding of relay K, battery in the connecting device ahead.

If the repeater is seized by a connecting device, for example by a first group selector, i. e., earth potential is connected to the conductor c, the following seizing circuit is completed: earth potential in the connecting device, conductor *c*, contacts 2*z*, 6*k*, 7*c*, winding II of relay C, battery, earth. In this circuit the relay C of the repeater operates and opens a short-circuit for its winding I at its contact 7*c* and this is thus connected in the seizing circuit. By the closing of contact 5*c* a holding circuit is completed for the relay C independently of contact 6*k*. By the opening of contact 17*c* the circuit indicated above for the relay K is opened so that this relay restores. By the closing of contact 16*c* direct earth potential is connected to the outgoing c-conductor and thus an indication is given that the connecting devices are to be seized. By the closing of contact 26*c* the following circuit is completed for the relay R: earth, contact 26*c*, 25*v*, wiper 1*dm* of the zone switch in the normal position, winding I of relay R, battery, earth.

When now the calling subscriber transmits an impulse train which may be arranged to indicate the value of the connection set up, relay A is energized intermittently over talking conductor *a*, contact 1*g*, winding of relay A, battery, earth. By the intermittent opening of the contact 29*a* and closing of contact 30*a* the dialled impulses are transmitted over the upper talking conductor to the succeeding connecting device. On the first operation of relay A the following circuit is connected for the relay V: earth, contact 8*a*, windings I and II of relay V, battery, earth. The relay V closes contact 9*v* and thus short-circuits its winding I. The relay V in this way is arranged to have a particular release period, so that for a short period opening of the contact 8*a* during the impulse train the contacts of the relay V are maintained in their operated position. The following circuit is completed: earth, contact 23*v*, 24*r*, winding I of relay R, battery, earth. In this circuit the energizing of relay R is maintained independently of the wiper 1*dm*. The impulses of the dial impulse train sent out are transmitted over the following path to the magnet DM of a discriminator serving for zone characterization: earth, contact 22*a*, 21*r* magnet DM, battery, earth. The wipers of the discriminator are thus moved from the normal contact and set on a particular contact corresponding to the number of impulses which are included in the impulse train sent out. The original circuit of relay R is thus opened at wiper 1*dm*. At the end of the impulse train the contact 8*a* remains open for some time so that the relay V has an opportunity of restoring. By the opening of contact 23*v* the holding circuit for the relay R is interrupted and this relay deenergized and cannot be influenced again by the succeeding impulse trains as wiper 1*dm* has moved and contact 24*r* was opened when relay R deenergized.

The further operations for setting up the connection are not of interest in this case.

When the calling subscriber replies battery potential is connected to the lower talking conductor in the connecting device and as a result relay G is energized over contact 15*c*. By the opening of contact 1*g* the impulse relay A is disconnected from the upper talking conductor. At contact 29*g* the following circuit is completed for the magnet DZ of the time switch: earth, contact 19*x*, 29*g*, magnet DZ, battery, earth. The wipers of the time switch are operated from their normal positions to the first contact. The magnet DZ has a contact 11*dz*, by which the following circuit is closed: earth, contact 11*dz*, 13*c*, winding I of relay X, battery, earth. The relay X operates in this circuit and at contact 19*x* opens the circuit indicated above for the magnet DZ. Magnet DZ and relay X now control each

other to cause the stepping of switch DZ. The next and all following operations of the magnet DZ result at contact 19x upon each release of relay X.

The wiper 1dm of the zone switch connected with the magnet DM is set on a particular zone point—in this case there are four zone points Zo1—Zo4 shown—by means of the impulse train determining the direction. At each zone point one of the resistances Wi1—Wi4 is connected, which are different from one another. By these different resistances it is arranged that according to the setting of the wiper 1dm on a particular zone point, i. e., according to the value of the connection set up, the condenser Co receives a completely determined charge over the following path: earth, contact 26c, 25v, wiper 1dm in a particular position, one of the zone points Zo1—Zo4, one of the resistances Wi1—Wi4, condenser Co, contact 27x, resistance Wi, battery, earth. The higher the connected resistance the smaller is the charge which the condenser receives. If now the relay X is energized the contact 27x is opened and thus battery potential is disconnected from the condenser, i. e., the charging circuit for the condenser is interrupted. By the closing of contact 28x the winding II of the relay X which leads to earth potential is connected and the condenser Co discharges over this winding of the relay X.

The relay X was connected to contact 11dz over winding I. This winding is connected directly thereto and is disconnected by means of the same contact 11dz when magnet DZ energizes. For the time being the release of the relay X is not permitted, however, and this state continues until the discharging circuit of the condenser Co is without effect on the winding II of the relay X. The relay X is thus arranged to have a slow release due to the condenser Co. This slow release is varied according to the previously connected resistance, i. e., according to the selected zone. The connection of the magnet DZ of the time switch again at contact 19x, i. e. after the release of the relay X, takes place after various time intervals according to the various zones. In this way the wipers of the magnet DZ are stepped on more quickly or more slowly. When the wiper 1dz has reached the contact to which the slow relay Z is connected, the following circuit is completed: earth, contact 10dz, wiper 1dz, winding of relay Z, battery, earth. The relay Z closes its contact 4z and by connecting earth to the contact 5c maintains the circuit for relay C. By means of contact 2z the blocking conductor is interrupted, while by means of contact 3z alternating current is connected to this conductor. The metering impulse accepting device may be connected in the previous connecting device in the blocking conductor C and can be, for example, a parallel connected rectifier which passes on the impulse and insures that the subscriber's meter shall be stepped by a single amount.

The next metering impulse is sent out when the wiper 1dz again reaches the contact to which the relay Z is connected. By means of the various release periods of the relay X it is arranged that the operation of the time switch takes different periods according to the zone, so that the meter at the calling subscriber is stepped on at different intervals according to the zone.

When at the termination of the connection the calling subscriber hangs up his receiver, then in known manner by the disconnection of the blocking conductor in the connecting device the relay C is restored. By the opening of contact 15c the relay G is disconnected from the lower talking conductor and so restored. Time switches and zone switches are restored to normal in the following manner: after the release of the contact 17c the following circuit is completed for the magnet DZ of the time switch: earth, contact 17c, 18r, wiper 2dz in operating position, magnet DZ, battery, earth. By the closing of contact 11dz the following circuit is completed for the winding II of the relay R: earth, contact 11dz, 14c, winding II of relay R, battery, earth. At contact 18r the circuit indicated above for the magnet DZ is interrupted so that the contact 11dz is opened. By release of the relay R so caused, the closing of the contact 18r results again and the magnet DZ is connected again in the manner described above. The alternate play between the magnet DZ and the relay R continues until the wipers of the time switch have reached their normal position. When this is the case the following circuit is completed: earth, contact 17c, 18r, wiper 2dz in normal position, wiper 2dm in operating position, magnet DM, battery, earth. The magnet DM steps on its wipers by a single step and closes its contact 12dm and thus completes the following circuit for the relay R: earth, contact 12dm, 14c, winding II of relay R, battery, earth. By contact 18r the circuit indicated above for the magnet DM is opened. In similar manner the wipers of the time switch are stepped on as with the wipers of the zone switch until they have reached their normal positions. Then over the wipers 2dm and 2dz both in their normal positions, and contacts 18r and 17c, earth potential is connected to the winding of relay K, which operates to restore the system to its normal position.

In Fig. 2 a second embodiment of the invention is shown. It is concerned with the parts of Fig. 1 indicated in dotted lines. The difference from the arrangement according to Fig. 1 is that instead of various resistances, various condensers Co1–Co4 are connected to the zone points Zo1–Zo4. The condensers are of different capacities, so that after the connection of one or other of the condensers by means of the zone switch in view of the different discharge amounts, the relay X is arranged to have different release periods.

What is claimed is:

1. In a circuit arrangement for time zone metering for telephone systems wherein there is means for extending connections to different zones, a timing switch, a relay for controlling the speed of operation of said switch, means controlled in the establishment of connections for varying the release time of said relay in accordance with the zone to which the connection is extended, said relay thereafter operating said switch at different velocities, dependent on its established release time, to transmit metering impulses.

2. A circuit arrangement in accordance with claim 1 in which the means for varying the release time of said relay consists of a switch for connecting different potentials in the circuit of said relay.

3. A circuit arrangement in accordance with claim 1 wherein the means for varying the release time of said relay consists of means for connecting a different capacitance in the circuit thereof.

4. A circuit arrangement according to claim 1 wherein the means for varying the velocity of said timing switch comprises a zone switch and a condenser, said zone switch operated in accordance with the zone to which a connection is extended to establish a different charge on said condenser and connect it in the circuit of said relay.

5. A circuit arrangement for time zone metering for a telephone system wherein there is means for extending connections to different zones, comprising a timing switch operated at different velocities to transmit metering impulses, a circuit for controlling the velocity of operation of said timing switch, a condenser and a plurality of resistances, and means for connecting different resistances and said condensers in said circuit dependent upon the zone to which a connection is extended.

6. In a telephone system wherein connections are extended to different zones, a zone metering arrangement comprising a timing switch for transmitting metering impulses to assess a charge for connections, a condenser, a zone switch operated in accordance with the zone connected with for placing different charges on said condenser, and means for then connecting the condenser in the operating circuit of the timing switch to vary the velocity of operation thereof in accordance with the charge placed thereon.

7. A telephone system as claimed in claim 6 wherein there is a relay for controlling the operation of the time switch, and wherein the release time of said relay is varied by connecting said condenser in circuit therewith to thereby vary the velocity of operation of the time switch as specified.

HANS J. LURK.
FELIX BLOCH.