March 7, 1967 M. E. MAYNARD 3,307,272

HOT AIR CURING OVEN

Filed April 8, 1964 3 Sheets-Sheet 1

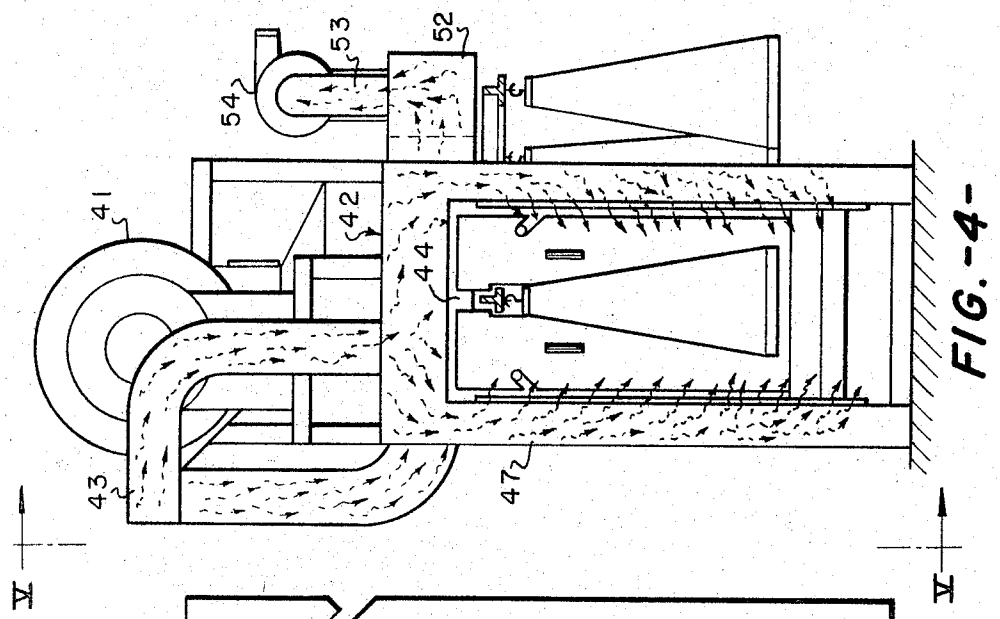

FIG. -4-

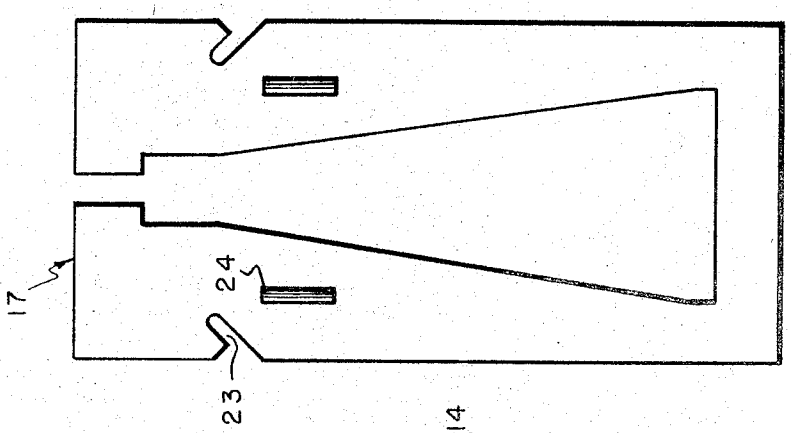

FIG. -3-

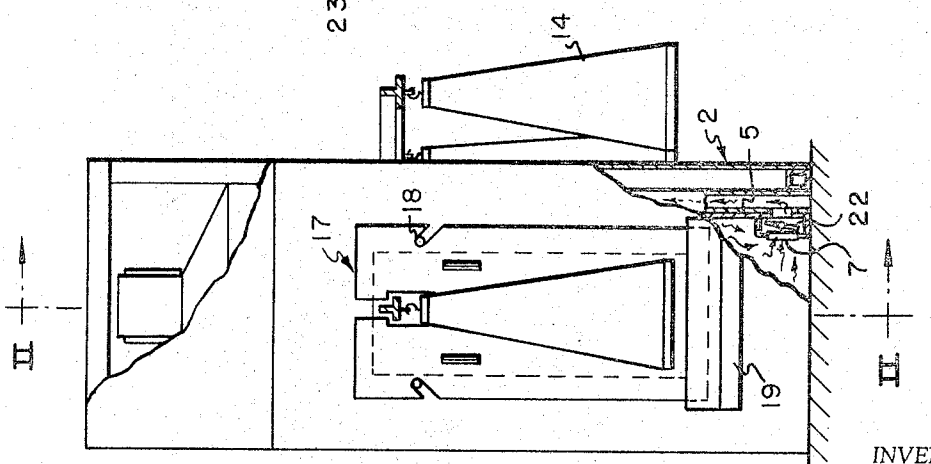

FIG. -1-

INVENTOR.
MARVIN E. MAYNARD
BY
ATTORNEY

March 7, 1967 M. E. MAYNARD 3,307,272

HOT AIR CURING OVEN

Filed April 8, 1964 3 Sheets-Sheet 2

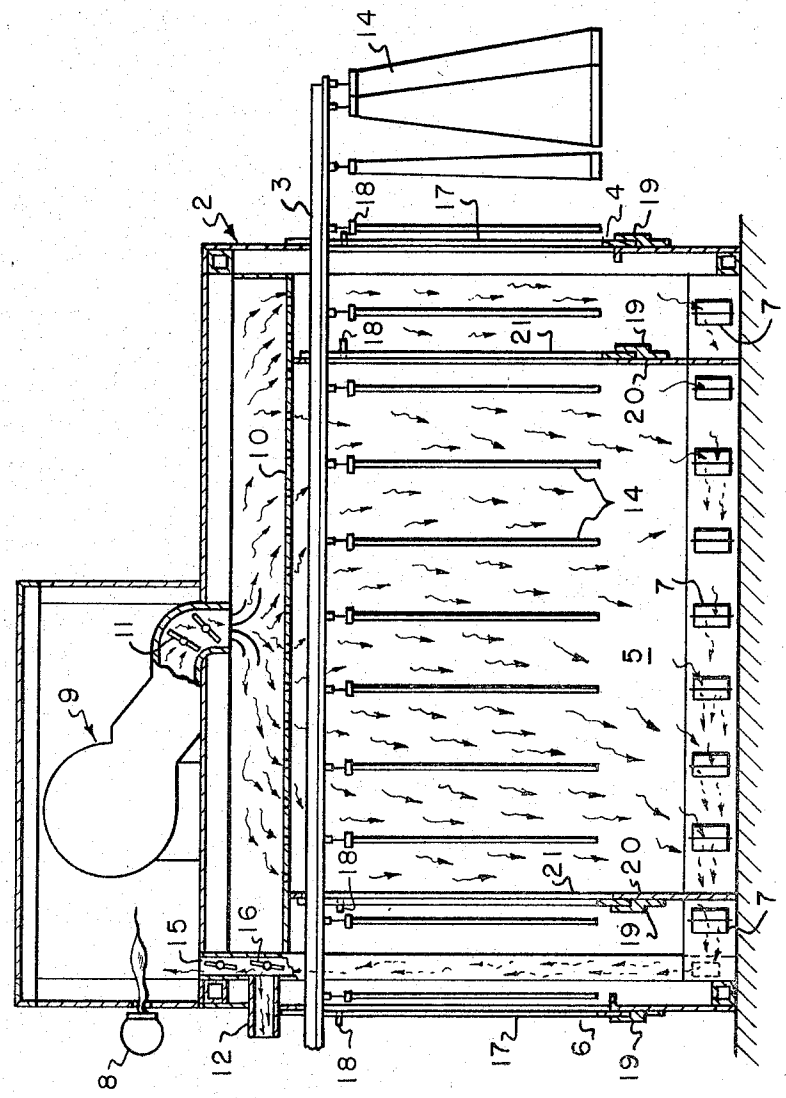

FIG. -2-

INVENTOR.
MARVIN E. MAYNARD
BY
ATTORNEY

March 7, 1967 M. E. MAYNARD 3,307,272

HOT AIR CURING OVEN

Filed April 8, 1964 3 Sheets-Sheet 3

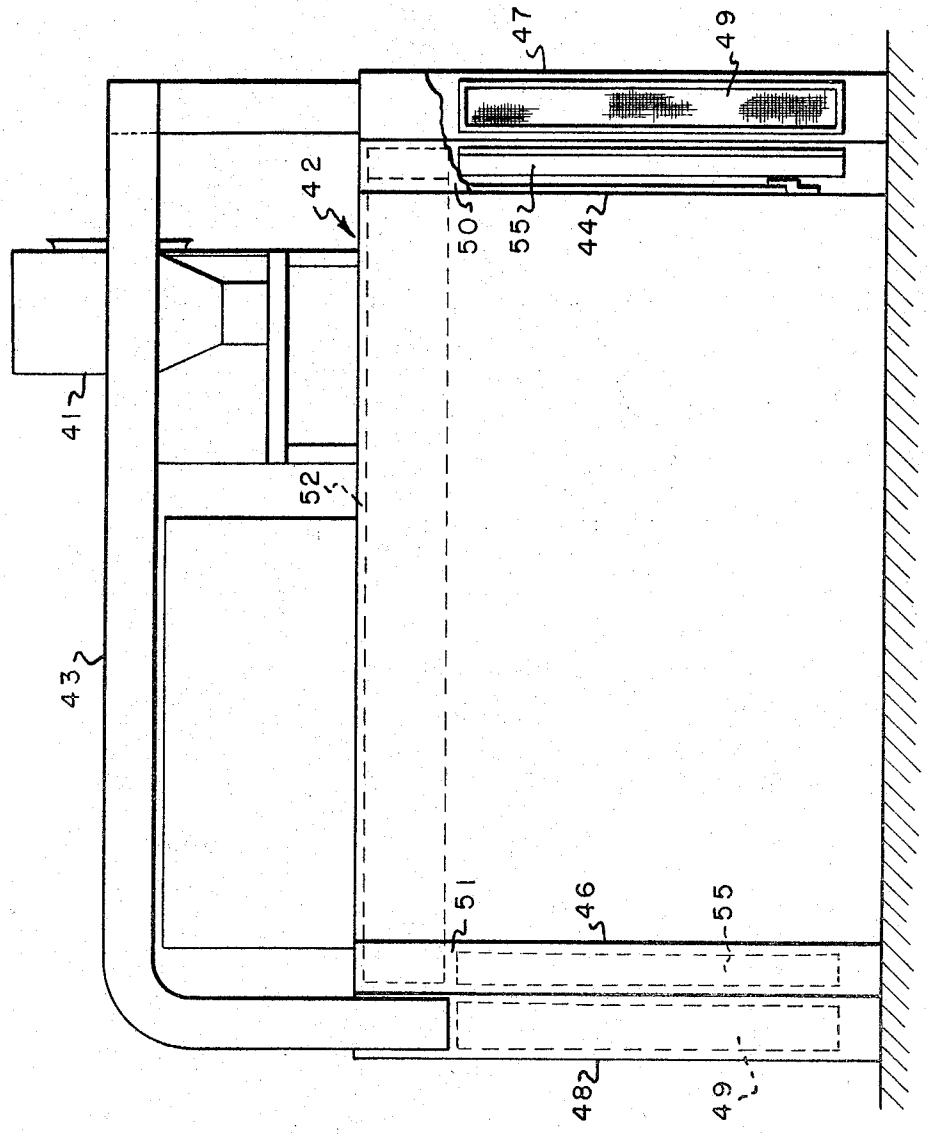

FIG. 5

INVENTOR.
MARVIN E. MAYNARD
BY
ATTORNEY

United States Patent Office 3,307,272 Patented Mar. 7, 1967

3,307,272

HOT AIR CURING OVEN

Marvin E. Maynard, Spartanburg, S.C., assignor to Deering Milliken Research Corporation, Spartanburg, S.C., a corporation of Delaware

Filed Apr. 8, 1964, Ser. No. 358,345
7 Claims. (Cl. 34—219)

This invention relates to a curing oven and more specifically to a curing oven suitable for completion of a chemical reaction on a presensitized, but otherwise finished, garment.

A recent development in the textile industry has been that of the preparation of durably creased finished garments. The durably creased garments are most often prepared from fabrics which have been presensitized, that is to say, prepared from fabrics, which, when subjected to the proper type of posttreating operation, will retain a durable crease. The presensitized fabrics are usually fabrics which rely upon a coating or impregnant such as for instance, a thermosetting resin or a resin having the ability to cross-link with the chemical structure of the fiber making up the fabric. Both the cross-linking type presensitized fabric and the thermosetting resin presensitized type fabrics require the use of a heat-curing operation as the final posttreatment to permanently setting a crease in the finished garment. Durable creases may also be imported to garments prepared from fabrics which are composed of thermoplastic fibers or blends of thermoplastic fibers. The thermoplastic fiber containing garment is creased and the crease made permanent by heating the garment to a temperature approaching the melting point of the thermoplastic fiber.

Due to the fact that the heat treating operation is carried out upon a finished garment, very exacting requirements are made of the apparatus employed for effecting the heat treating operation. The apparatus must be able to maintain those high temperatures which are necessary for curing or cross-linking resins and more specifically the apparatus must be able to maintain temperatures in the range of from about 250° F. to about 375° F. Temperatures within the aforementioned range must be uniform throughout all areas of the garment in order to effect uniform curing. The uniform temperatures must also be maintained without the use of air velocities of an intensity such as to wrinkle or disturb the garment.

It is therefore an object of this invention to provide apparatus for effecting an adequate heat treating operation in a process for the preparation of permanently creased garments.

It is another object of this invention to provide heat treating appartus which will maintain substantially uniform temperatures without the use of air velocities of an intensity sufficient to cause garment wrinkling.

A better understanding of the invention may be had from the following detailed description together with the accompanying drawings in which:

FIGURE 1 is a partially broken front view of the dryer of this invention,

FIGURE 2 is a sectional view taken along the line II—II of FIGURE 1,

FIGURE 3 is a front view of one form of a template member employed in the curing oven.

FIGURE 4 is a front view of the curing oven equipped with an air screen,

FIGURE 5 is a side view taken in the direction of the arrow V of the air curtain of FIGURE 4.

Referring to FIGURES 1 and 2 of the drawings, the novel curing oven includes an insulated enclosure **2** having a suitable input opening **4** and an output opening **6** at opposite ends of insulated enclosure **2**. A continuous conveyor member **3** is mounted so as to provide for the continuous passage of garments **14** through said curing oven. The insulated enclosure **2** has an inner wall member **5**, the inner wall member **5** having, at the lower extremity of those portions of the inner wall which are parallel to the direction of garment movement within the oven, a plurality of horizontally aligned, adjustable louver members **7**, said louver members **7** having damper blades **22** mounted directly behind said louver members in that portion of free space which exists between the inner wall **5** and the insulated enclosure member **2**. Alternatively, simple duct members may be employed for housing the louvers, the ducts extending the length of the walls which are parallel to the direction of garment movement within the oven. Heat is furnished by suitable means, such as for instance, a gas burner **8**. The heat generated by burner member **8** is driven downwardly by a blower unit **9** through a perforated ceiling member **10** and from there into the main inner body portion of the insulated enclosure **2**. The rate of flow from the blower member **9** may be controlled by means of damper blades **11**. The heated air being forced downwardly through ceiling member **10** exits through adjustable louvers **7** and flows rearwardly between inner wall portion **5** and the outer wall making up the insulated enclosure **2** to the hollow wall portion existing about output opening **6**, until the heated air is finally exhausted through exhaust duct **12** or returned to the blower through bolwer duct **15**, the passage of the heated air being determined by means of damper blades **16** which are regulated according to the temperature requirements of the oven.

Entrance and exit portions **4** and **6** respectively, are preferably equipped with template members **17**, template members **17** being secured by a mounting bracket **19** and pin members **18**. A better illustration of the template may be seen in FIGURE 3 of the drawings which illustrates a template which is suitable for use in the curing of presensitized trousers. The template member **17** is preferably equipped with notch members **23** which engage pin members **18** mounted on the insulated enclosure **2** of the oven. The template member **17** is also preferably equipped with handle members **24** to facilitate removal of a template member such as, for instance a trouser template member and the substitution of a template member suitable for use with another garment such as for instance a jacket template member. Preferably, the insulated enclosure **2** is provided with bulkhead members **20** which provide a vestibule at the entrance portion **4** and a vestibule at the exit portion **6**. Bulkhead members **20** are open, of course, for the passage of garments therethrough and are provided with mounting bracket members **19** and pin members **18** so as to receive an interior template member **21**. The use of vestibules equipped with inner template members provides a better heat seal and also allows the garment to begin cooling before leaving the oven, thereby facilitating the removal of the cured garment at the oven exist portion. To aid in the cooling of the garments **14** before the garments leave the oven, ceiling member **10** is free of perforations in that area above the vestibule at output opening **6**, thereby preventing any heated air from being forced directly down on garments **14** while the garments are in the vestibule at exit portion **6**.

It should be understood that conveyor member **3** advances garments **14** at a fairly rapid rate and therefore the closure effected at entrance portions **4** and exit por-

tions 6 is a reasonably good closure. The closure effected by the garments themselves is further improved by the use of a template which is cut to the shape of the garment being cured. It is preferred that an air screen be employed with the curing oven in order to still further improve the heat seal at the entrance and exit portions of the oven. An air screen which is suitable for use with the oven of this invention is illustrated in FIGURES 4 and 5. In FIGURES 4 and 5, an air screen is illustrated which is mounted on a presensitized garment curing oven 42. The air screen apparatus comprises a fan member 41 which forces fresh air into duct member 43. Duct member 43 is connected to a U-shaped duct member 47 which is positioned at the entrance 44 of the presensitized garment curing oven 42 and connected to a U-shaped duct member 48 which is positioned at the exit portion 46 of presensitized garment curing oven 42. U-shaped duct members 47 and 48 have elongated openings 49 which are preferably screened openings disposed on the inner portion of either leg of the U-shaped members. Fresh air from fan member 41 is thereby sent through duct member 43 into U-shaped members 47 and 48 wherein the air is ejected from the elongated openings 49 in a manner so as to form a screen across entrance portion 44 and exit portion 46. The presensitized garment curing oven 42 is equipped with U-shaped duct members 50 and 51, U-shaped duct members 50 and 51 being interconnected by means of duct member 52. Duct member 52 is connected to exhaust conduit 53 which has an exhaust fan 54 housed therein. Exhaust fan 54 causes air being ejected from elongated openings 49 to be drawn into elongated openings 55 of U-shaped members 50 and 51, respectively. The air drawn into U-shaped members 50 and 51 is then carried into duct member 52 and from there into exhaust conduit 53.

Garments which are heat cured with the apparatus of this invention are prepared from fabrics which have been presensitized by means of application of a suitable thermosetting resin or by impregnation with a material having the ability to cross-link the fibers of the fabric. The fabrics which have thus been presensitized are cut, sewn, finished and pressed at temperatures insufficient to effect either curing of the thermosetting resin or cross-linking of the reactive cross-linking agent. The entire garments are then mounted on the continuous conveyor and continuously passed through the oven which is operated at temperatures sufficient to effect complete polymerization of the thermosetting resin or complete cross-linking of the cross-linking agent during that time within which the continuously moving garments are within the curing oven. The temperature range to be maintained within the oven as well as the rate of travel of the continuous conveyor will be determined by the weight of the fabric as well as by the style of the garment and the type of chemical treatment used to effect the presensitization and subsequent permanent crease. Where, for instance, relatively light weight cotton garments are employed which have been cut from fabrics treated with a cross-linking agent, temperatures of about 280° F. may be employed. Where, however, heavier garments prepared from fabrics which have been treated with a thermosetting resin are employed, temperatures as high as about 450° F. may be necessary in order to effect a complete cure. The rate of travel of the continuous conveyor from entrance point to exit point is usually in the range of from about 5 minutes to about 15 minutes.

Having thus disclosed the invention, what is claimed is:

1. A hot air curing oven for continuously curing presensitized garments comprising a chamber having entrance and exit portions equipped with removable templates cut to the shape of the garment, heater and blower means for directing heated air to said chamber, a continuous conveyor member extending through said chamber and garment members carried by said conveyor, said garment members effecting a heat seal at the entrance and exit portions of said oven.

2. A hot air curing oven for continuously curing presensitized garments comprising a chamber having entrance and exit portions, said chamber having bulkhead members positioned proximate said entrance and exit portions so as to form exit and entrance vestibules, said bulkhead members equipped with removable templates cut to the shape of the garments, heater and blower means for directing heated air to said chamber, a continuous conveyor member extending through said chamber and garment members carried by said conveyor, said garment members effecting a heat seal at the entrance and exit portions of said oven.

3. A hot air curing oven for continuously curing presensitized garments comprising a chamber having entrance and exit portions, said entrance and exit portions being equipped with air screens and removable templates cut to the shape of said garments, heater and blower means for directing heated air to said chamber, a continuous conveyor member extending through said chamber and garment members carried by said conveyor, said garment members and said air screens effecting a heat seal at the entrance and exit portions of said oven.

4. A hot air curing oven for continuously curing presensitized garments comprising a chamber having entrance and exit portions, said entrance and exit portions being equipped with air screens, said chamber having bulkhead members positioned proximate said entrance and exit portions so as to form exit and entrance vestibules, said bulkhead members and said entrance and exit portions being equipped with removable templates cut to the shape of the garments, heater and blower means for directing heated air to said chamber, a continuous conveyor member extending through said chamber and garment members carried by said conveyor said garment members and said air screens effecting at heat seal at the entrance and exit portions of said oven.

5. A hot air curing oven for continuously curing presensitized garments comprising a chamber having inner and outer walls and entrance and exit portions, said entrance and exit portions being equipped with removable templates cut to the shape of the garments, heater and blower means for directing heated air downwardly into said chamber, a continuous conveyor member extending through said chamber and garment members carried by said conveyor, said inner wall having adjustable louvers suitable for exhausting said heated air disposed on those lower portions of said inner wall which are parallel to said conveyor member, said garment members effecting a heat seal at the entrance and exit portions of said oven.

6. A hot air curing oven for continuously curing presensitized garments comprising a chamber having inner and outer walls and air screen equipped entrance portions and air screen equipped exit portions, said entrance and exit portions being equipped with removable templates cut to the shape of the garments, heater and blower means for directing heated air downwardly into said chamber, a continuous conveyor member extending through said chamber and garment members carried by said conveyor, said inner wall having adjustable louvers suitable for exhausting said heated air disposed on those lower portions of said inner wall which are parallel to said conveyor member, said garment members and said air screens effecting a heat seal at the entrance and exit portions of said oven.

7. A hot air curing oven for continuously curing presensitized garments comprising a chamber having inner and outer walls and air screen equipped entrance portions and air screen equipped exit portions, said chamber having bulkhead members positioned within and coupled to said inner wall and positioned proximate said entrance and exit portions so as to form exit and entrance vestibules, said bulkhead members and said entrance and exit portions being equipped with removable templates cut to

the shape of the garments, heater and blower means for directing heated air downwardly into said chamber, a continuous conveyor member extending through said chamber and garment members carried by said conveyor, said inner wall having adjustable louvers suitable for exhausting said heated air disposed on those lower portions of said inner wall which are parallel to said conveyor member, said garment members and said air screens effecting a heat seal at the entrance and exit portions of said oven.

References Cited by the Examiner

UNITED STATES PATENTS

526,349	9/1894	Galloway	34—213
1,399,415	12/1921	Taliaferro	34—242 X
1,627,529	5/1927	Wigglesworth	34—103
1,725,059	8/1929	Colby.	
2,295,475	9/1942	Hurxthal	34—216 X

JAMES W. WESTHAVER, *Primary Examiner.*