May 5, 1925. 1,536,889

W. KWIATKOWSKI ET AL

ROTATABLE CLOTH RACK

Filed May 6, 1924

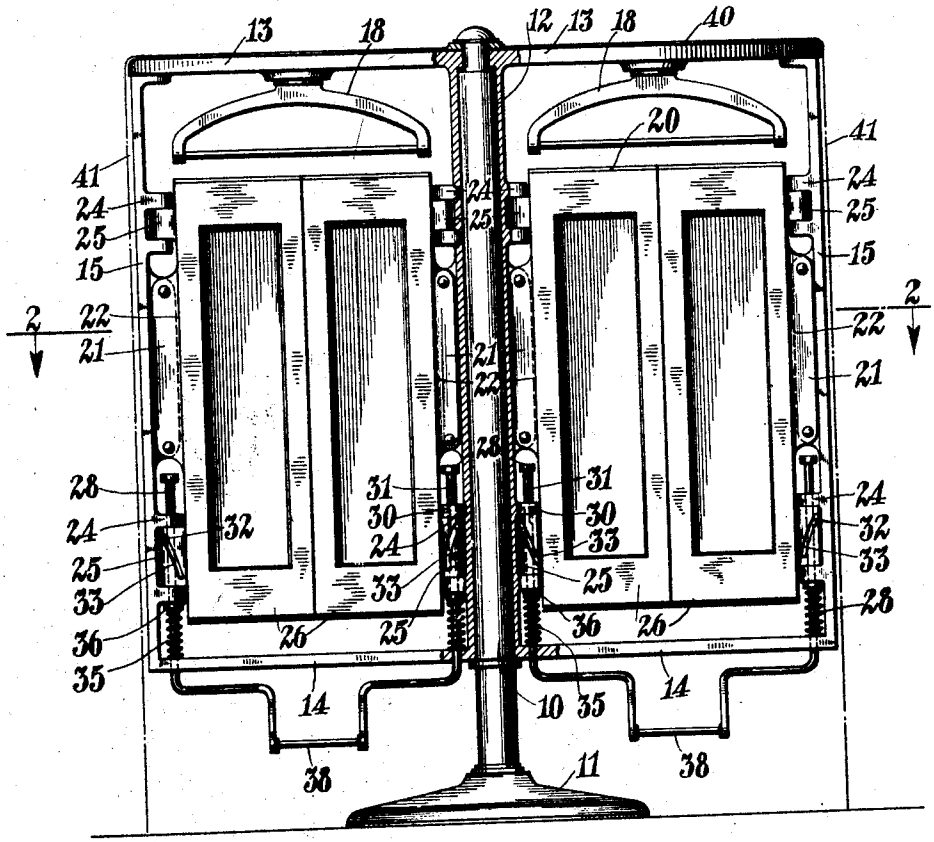

Fig. 1.

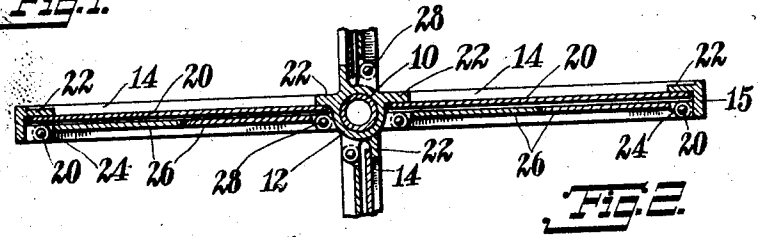

Fig. 2.

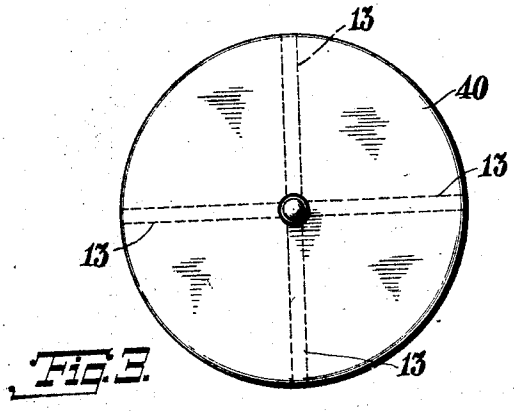

Fig. 3.

Inventor
Wladyslaw Kwiatkowski
Hipolit Wieschon
BY
ATTORNEY

Patented May 5, 1925. 1,536,889

UNITED STATES PATENT OFFICE.

WLADYSLAW KWIATKOWSKI AND HIPOLIT WIESCHON, OF ASTORIA, NEW YORK.

ROTATABLE CLOTH RACK.

Application filed May 6, 1924. Serial No. 711,339.

To all whom it may concern:

Be it known that we, WLADYSLAW KWIATKOWSKI and HIPOLIT WIESCHON, citizens of Poland, residing at Astoria, Long Island, in the county of Queens and State of New York, have invented certain new and useful Improvements in Rotatable Cloth Racks, of which the following is a specification.

This invention relates generally to clothes racks, having more particular reference to a novel type of clothes rack which is arranged for rotation to bring the desired one of a number of garment holders to a point easy of access, the invention having for an object the provision of a simple and novel garment holder of this sort which has incorporated therewith means for creasing or pressing the garments contained therein.

For further comprehension of the invention, and of the object and advantages thereof, reference will be had to the following description and accompanying drawing, and to the appended claims in which the various novel features of the invention are more particularly set forth.

Fig. 1 of the drawing is a side elevation with parts in vertical section, of our improved garment hanger.

Fig. 2 is a detail horizontal sectional view taken on the line 2—2 of Fig. 1.

Fig. 3 is a plan view.

As here embodied our improved garment hanger or clothes rack comprises a central post or standard 10 which is widened at the lower end to form a foot 11. Freely surrounding this standard 10 to be rotatable thereon is a tube 12 from the upper and lower ends of which the horizontal arms 13 and 14 respectively radiate, there being here shown four arms in each set which are evenly spaced from one another. The outer ends of the corresponding upper and lower arms are united by vertical stiles 15. A rotatable frame is thus produced which is carried by the standard 10.

Fixed to and depending from the top arms are garment hangers 18 of ordinary construction and below each of said garment hangers we provide, between the stile 15 and the tube 12, a device which is adapted to hold the garment pressed or creased. This device comprises a vertically elongated backing plate 20 which is formed on opposite sides with extensions 21 which are screwed or otherwise secured to complementary extensions 22 from the stile 15 and tube 12. Fixed to and projecting toward one another from the stile and tube are the pairs of hinge ears 24 between which engage the elongated hinge ears 25 formed on the sides of a pair of flat leaves 26 which are adapted to co-operate with the plate 20 in pressing the garment.

The upper sets of hinge ears are held in position by ordinary pintles, while the lower sets are retained by means of the rods 28 which pass freely the various ears and have a feather engagement with one of the ears of each pair and an engagement with the ears 25 whereby longitudinal movement of the rods swings the leaves 26. The feather engagement between the rods 28 and the ears 24 may be effected by means of pins 30 fixed to the said ears and engaging in longitudinal grooves 31 in the rods. The engagement between the rods and the ears 25 whereby longitudinal movement of the rods causes the leaves 26 to swing, may be effected by means of pins 32 fixed to the said rod and engaging in spiral slots 33 in the said ears 25.

The rods 28 are pressed upward, that is to position with the leaves 26 pressed toward the plate 20, by means of expansion springs 35 which are coiled around the rod and bear between the arms 14 and collars 36 fixed on the rods. The lower ends of the rods 28 pass downward through suitable openings in the arms 14 and may be turned toward one another and connected at their bottoms by a foot-piece 38. By stepping on this foot-piece 38 the rods 28 may be caused to move downward and so swing the leaves 26 away from the plate 20, the leaves returning to normal position when the foot-piece 38 is released. We may mount a disk or cover 40 on the top arms 13 and attach thereto the upper edge of a drapery or curtain such as indicated at 41 which freely encloses the hanger, and which may be conveniently divided into sections to permit of ready access to any individual hanger section.

While we have illustrated and described a preferred embodiment of our invention it is to be understood that we do not limit ourselves to the precise construction herein shown and that various changes and modifications might be made therein without departing from the spirit and scope of the invention as defined in the appended claims.

Having thus described our invention what

we claim as new and desire to protect by Letters Patent of the United States is as follows:—

1. In a garment hanger, a vertical frame, a backing plate fixed thereto, a pair of leaves hinged to said frame at opposite sides of the said plate and adapted to co-operate with the latter in pressing the garment, and elements depending from said frame and adapted to be pressed downward to swing the said leaves away from position co-operating with said plate.

2. In a garment hanger, a vertical frame, a backing plate fixed thereto, a pair of leaves formed with hinge ears, co-operating hinge ears on the said frame, rods extending through the said hinge ears, said rods having feather connections with the hinge ears on the frame, and being formed with pins projecting into spiral slots in the other hinge ears, and springs bearing on said rods to hold them longitudinally in position with said leaves pressed toward the said plate.

3. In a garment hanger, a vertical frame, a backing plate fixed thereto, a pair of leaves formed with hinge ears, co-operating hinge ears on the said frame, rods extending through the said hinge ears, said rods having feather connections with the hinge ears on the frame, and being formed with pins projecting into spiral slots in the other hinge ears, and springs bearing on said rods to hold them longitudinally in position with said leaves pressed toward the said plate, and a cross-piece connecting the lower ends of said rod.

In testimony whereof we have affixed our signatures.

WLADYSLAW KWIATKOWSKI.
HIPOLIT WIESCHON.