Nov. 19, 1946. S. KOPP 2,411,436

HEAT EXCHANGER

Filed March 3, 1944

- FIG. 1 .-

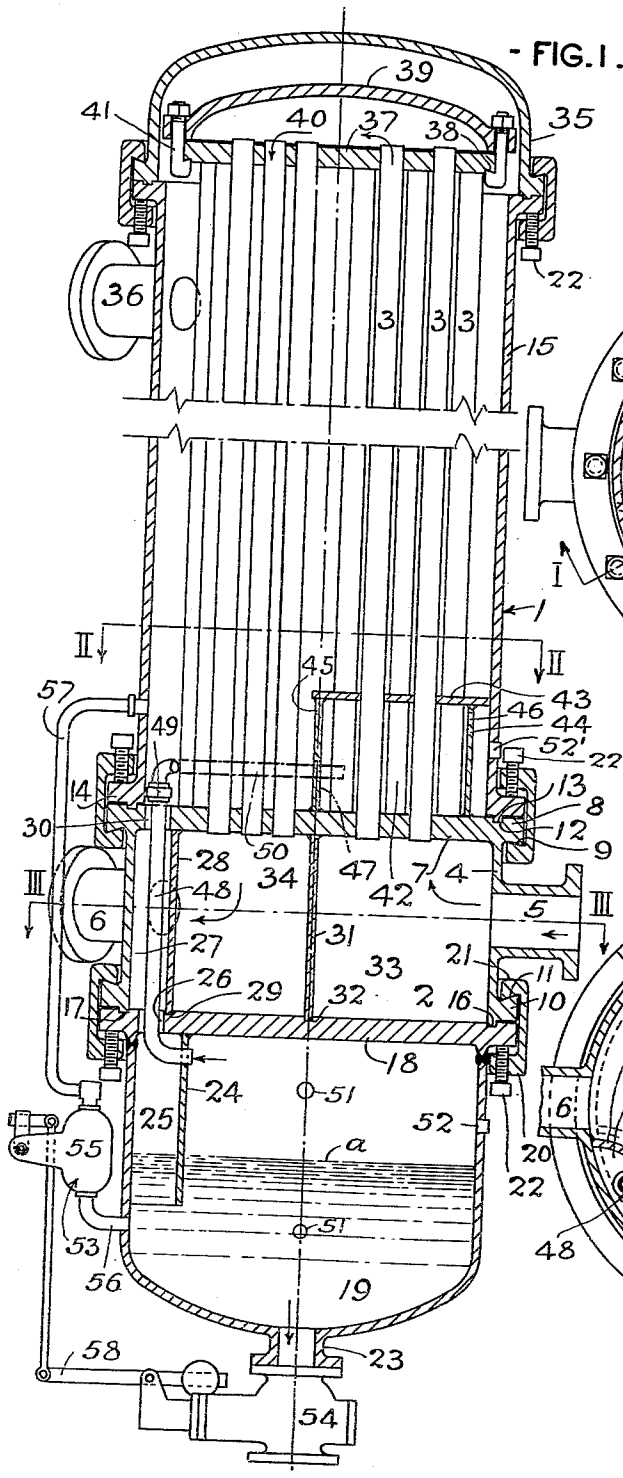

- FIG. 2.-

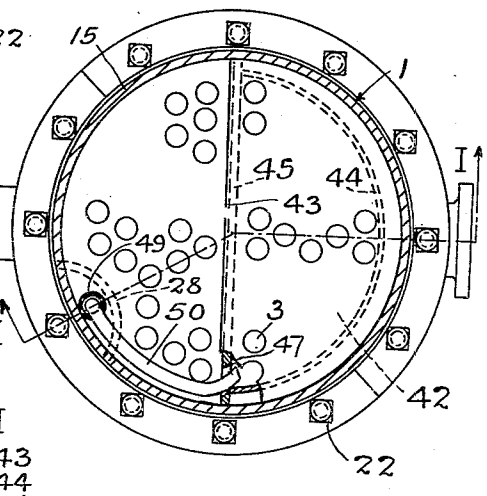

- FIG. 3.-

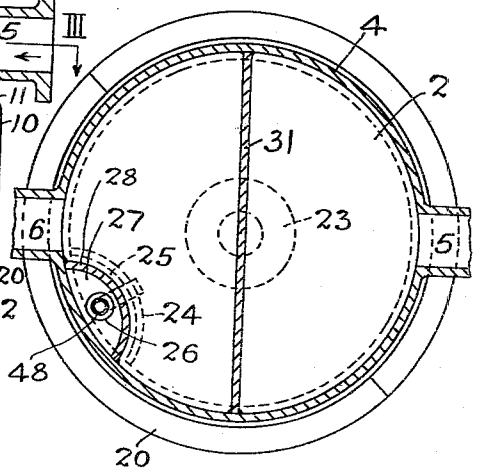

INVENTOR
Sigmund Kopp
BY
S. C. Yeaton
ATTORNEY

Patented Nov. 19, 1946

2,411,436

UNITED STATES PATENT OFFICE

2,411,436

HEAT EXCHANGER

Sigmund Kopp, Glen Rock, N. J., assignor to American Locomotive Company, New York, N. Y., a corporation of New York

Application March 3, 1944, Serial No. 524,859

2 Claims. (Cl. 257—28)

1

This invention relates to heat exchangers, and more particularly to a condensate drain for a feedwater heater.

In conventional feedwater heaters, much of the heat exchange surface is often submerged in condensate, thereby reducing the efficiency of the exchanger. Various attempts have been made to successfully drain off this condensate so that the maximum heat exchange surface is available. The present invention is directed to provide a more satisfactory drain for such condensate.

The object of the present invention is to provide an improved condensate drain for a heat exchanger.

Referring to the drawing forming a part of this application, Figure 1 is a section, taken on the line I—I of Fig. 2, foreshortened, showing the heat exchanger of the present invention, parts being shown in full, and a pipe being indicated in dot-dash lines; Fig. 2 is a section on the line II—II of Fig. 1, only some of the tubes being indicated and parts being broken away to show a slot in one of the walls of the structure; and Fig. 3 is a section on the line III—III of Fig. 1, parts being broken away.

The present invention has application to various types of heat exchangers in which condensate collects in some portion thereof. A feedwater heater, with the channel at the bottom of the tubes, is an example of such a heat exchanger, and the following description, for simplicity, will be confined to such a feedwater heater.

The feedwater heater is indicated generally in the drawing by the reference numeral 1. It is vertically disposed and has a channel 2 and tubes 3, the channel being at the bottom of the tubes. Channel 2 may be, as shown, a casting and has a cylindrical side wall 4 through which open, at opposite sides thereof, a water inlet nozzle 5 and a water outlet nozzle 6.

A tube sheet 7, in which the tubes 3 are secured at their bottoms, closes the top of the channel and is cast with the wall 4. It extends circumferentially beyond the wall 4 providing a flange 8 having an inclined recessed bottom face 9. A similar flange 10 extends outwardly from the bottom edge of the channel and is provided with a face 11 similar to face 9 but oppositely directed.

A groove 12 is formed in the top face of the tube sheet 7 for coaction with a tongue 13 depending from a flange 14 formed on the bottom of a shell 15 which is supported on top of the channel 2. A tongue 16 depends from the flange 10 for coaction with a groove 17 formed in the top face of a horizontal plate 18 closing the top

2

of a condensate receiver 19 to which the channel is secured. Plate 18 is extended circumferentially to the edge of flange 10 and is secured thereto by hook-shaped half rings 20, each of which has a flanged member 21 with an inclined face engaging face 11 and a plurality of set screws 22 threaded through the flange engaging the lower face of plate 18 and, when tightened, pulling channel 2 and receiver 19 into fluid-tight engagement.

The receiver 19 further includes a drain nozzle 23 at the bottom and a curved partition 24, depending from the plate 18 to which it is welded. Partition 24 is also welded at its vertical edges to the side wall of the receiver, thereby providing a condensate drain duct or chamber 25 open at its bottom into the remainder of the receiver 19. An orifice 26 in plate 18 above chamber 25 connects chamber 25 with a chamber 27 formed in channel 2 by a curved partition 28 concentric with partition 24 but of a smaller radius. Partition 28 is welded to the side wall and tube sheet of channel 2 and fits at its bottom in a groove 29 formed in the plate 18. An orifice 30 in tube sheet 7 above chamber 27 connects chamber 27 with the interior of the shell 15.

A partition 31 welded at the top to the tube sheet 7 and fitting at its bottom in a groove 32 formed diametrally in the plate 18, partitions the channel in half forming an inlet chamber 33 and an outlet chamber 34, nozzle 5 opening into chamber 33 and nozzle 6 opening out of, and partition 28 being disposed in, chamber 34. Shell 15 and channel 2 are secured together at their flanges 14 and 8 by half rings similar to the connection between channel 2 and receiver 19. The top of the shell is closed by a cover 35 connected to the shell 15 by similar flanges and half rings. A steam inlet nozzle 36 opens into the upper end of the shell.

The tubes 3 are fastened at their upper ends in a tube sheet 37 which has an inclined recessed face 38 in its bottom peripheral margin, and a cover 39, providing a chamber 40, is secured to the tube sheet by hook bolts 41. Tube sheet 37 and cover 39 are freely disposed in cover 35 so that the tubes and tube sheet 37 may expand and contract freely relative to the shell 15, and no stresses will be set up in the feedwater heater due to such expansion and contraction.

An uncondensed gas and vapor chamber 42 is formed in the shell by a semi-circular horizontal wall 43 and two vertical walls 44 and 45, wall 45 depending from and being welded to the inner edge margin of wall 43 and wall 44 being curved

concentric with the shell and spaced therefrom and depending from and being welded to the wall 43. Wall 44 is welded at its vertical edges to wall 45 and both walls 44 and 45 depend to and are welded to the tube sheet 7. An orifice 46 is formed in the wall 44, providing communication between the chamber 42 and the portion of the shell closed off on the outer side of wall 44. A slot 47 is formed in the wall 45, adjacent the shell wall and the tube sheet 7. The wall 43 is orificed permitting the tubes 3 intercepted thereby to pass therethrough.

A condensate receiver vent pipe 48 is disposed in chamber 27 and at its bottom extends through orifice 26 into chamber 25 and is fastened in partition 24, opening at its bottom end into the interior of the receiver 19 adjacent the plate 18. Pipe 48 also extends through orifice 30 and is connected by a union 49 to a curved pipe 50 which follows the wall of shell 15 adjacent the tube sheet 7 and extends through the slot 47 opening into the chamber 42, thereby providing communication between the chamber 42 and the receiver 19 for flow from receiver 19 to chamber 42 through pipes 48 and 50. Condensate from chamber 42 can return to the receiver 19 by flowing through the slot 47, the orifice 30, the chamber 27, the orifice 26 and the chamber 25.

Referring to Fig. 1, two openings 51 are shown in the center of the receiver 19, these openings being adapted for a condensate level gauge glass (not shown). An opening 52, in the wall of receiver 19 below nozzle 5, forms an uncondensed gas and vapor vent.

In order to maintain condensate in receiver 19 at a level above the bottom of the partition 24, thereby sealing same against the escape of steam into the receiver 19, a liquid level control apparatus, indicated generally by the reference numeral 53, is provided. It includes a control valve 54 secured to nozzle 23, and a float apparatus 55 disposed adjacent the outer wall of receiver 19 and connected to the interior of the receiver below the bottom of partition 24 by a pipe 56. Thus condensate from the receiver 19 enters the float apparatus through the pipe 56. The float apparatus is vented to the interior of the shell 15 by a pipe 57 and is connected to the valve 54 for operating same by linkage 58. The liquid level control apparatus is of a well-known type and no further description thereof is deemed necessary. Other suitable types of liquid level control apparatus may be employed if desired.

As it is necessary that the escape of steam be prevented by the bottom of the chamber 25 being sealed by condensate, when the exchanger is initially installed, the receiver 19 should be filled with water up to the desired condensate level, which is indicated by the dot-dash line *a* in Fig. 1. Or if desired, the linkage to the valve 54 may be secured in valve-closed position until it can be seen in the condensate level gauge that condensate has collected to the desired level.

The operation of the feedwater heater is as follows: Cold water enters the channel chamber 33 through nozzle 5, flows upwardly through the tubes 3 opening into chamber 33 and therefrom into chamber 40 which acts as a return, directing the water to the remainder of the tubes 3 through which the water flows downwardly into chamber 34 and out of the exchanger through nozzle 6. Steam enters the shell through nozzle 36 and flows around the tubes, heating the water therein and being condensed as it is cooled by the water. The condensate from the steam drops to the bottom of the shell and passes through the orifice 30 into the chamber 27, from which it passes, by means of orifice 26, into the chamber 25 and therefrom to the condensate receiver 19.

The condensate, collecting in the receiver 19, will raise the condensate level somewhat above the line *a* before the float apparatus 55 will be effected enough to open the valve 54 through the linkage 58. When the valve 54 is opened, the condensate in receiver 19 will partially drain off through the nozzle 23 so that the condensate will drop somewhat below the line *a* before the float apparatus once more closes the valve 54. Thus the draining off of condensate, as it continually drips into the receiver 19, will be periodical rather than continuous.

Uncondensed gas and vapor in the condensate escapes therefrom in the receiver 19 and passes into the pipe 48. The vent 52 acts as an auxiliary for any gas or vapor which does not escape through the pipe 48. The gas or vapor rises in the pipe 48, passes through the pipe 50 and is released in the chamber 42 around the coldest part of the tubes 3 passing through this chamber. It is here condensed, this condensate passing out of chamber 42 through the slot 47. If some gas or vapor is still uncondensed, it escapes from chamber 42 through the orifice 46 and therefrom through the vent 52'.

In the aforesaid operation, the vapor chamber 42 provides a zone around a portion of the tubes having the lowest temperature. This low temperature zone assures that non-condensable gases, released through vent 52', will have a minimum of steam present. Moreover, the vapor chamber 42 also assures that non-condensable gases are passed over the tubes therein at a substantial velocity to obtain good heat transfer. Otherwise, the accumulation of non-condensable gases around the tubes would result in a substantial drop in the heat transfer rate.

While the shell 15 may be vented of non-condensable gases without the use of the aforesaid low temperature zone, such venting would release gases carrying out more steam than when the chamber 42 is used. Thus, this additional feature is beneficial in the use of such condensers where inflammable or noxious vapors are condensed since the sub-cooled gases passing through the vent 52' will have a smaller quantity of these vapors present than if a simple vent were used.

The vent 52, provided in the receiver 19, serves as an auxiliary vent to the vent 52' and is used only during starting or in an emergency. Furthermore, when the heat exchanger is in operation, the pressure in the vapor chamber 42 will be somewhat lower than in either shell 15 or receiver 19, and this difference in pressure induces fluid flow from both the shell 15 and the receiver 19 to the chamber 42. Thus, pipes 48 and 50 function as a vent from the receiver 19 and not as a steam feed from the chamber 42 to the receiver 19.

While there has been hereinbefore described an approved embodiment of this invention, it will be understood that many and various changes and modifications in form, arrangement of parts and details of construction thereof may be made without departing from the spirit of the invention, and that all such changes and modifications as fall within the scope of the appended claims are contemplated as a part of this invention.

The invention claimed and desired to be secured by Letters Patent is:

1. A heat exchanger apparatus comprising a

vertical shell having an inlet for a condensable fluid; a tube sheet closing the bottom of said shell; tubes for a condensing fluid in said shell secured at their bottoms in orifices in said tube sheet; a channel beneath said shell for said tubes provided with an inlet and an outlet for said tube fluid and having a bottom wall and having, as a top wall, said tube sheet; a receiver beneath said bottom wall; a conduit for conveying condensate and uncondensed fluid from said shell to said receiver opening at its top to said shell and opening at its bottom into said receiver at a point substantially below said bottom wall; means for draining said condensate from said receiver operable to maintain received condensate at a depth to keep said conduit bottom covered and to maintain a space in said receiver above said received condensate for said uncondensed fluid; and means for condensing at least a portion of said uncondensed fluid in said space including a relatively small low temperature condensing chamber in said shell, adjacent a portion of said tube sheet adjacent said channel inlet, through which inlet portions of at least some of said tubes extend, said chamber being open at its bottom to the bottom of said shell exterior of said chamber for flow of chamber condensate to said conduit, and a pipe connecting said space with said chamber for flow of said space uncondensed fluid to said chamber, said chamber being vented to the exterior of said shell for removal of uncondensed fluid from said chamber.

2. A heat exchanger apparatus comprising a vertical shell having an inlet for a condensable fluid; a tube sheet closing the bottom of said shell; tubes for a condensing fluid in said shell secured at their bottoms in orifices in said tube sheet; a channel beneath said shell for said tubes having a

bottom wall and having, as a top wall, said tube sheet, said channel being vertically partitioned providing a plurality of chambers with which said tubes connect, said chambers extending vertically throughout the entire space between said tube sheet and said bottom wall, one of said chambers providing an inlet for its correlated tubes and having a laterally disposed fluid inlet and another of said chambers providing an outlet for its correlated tubes and having a laterally disposed fluid outlet; a receiver beneath said bottom wall; a conduit for conveying condensate and uncondensed fluid from said shell to said receiver opening at its top to said shell and opening at its bottom into said receiver at a point substantially below said bottom wall; means for draining said condensate from said receiver operable to maintain received condensate at a depth to keep said conduit bottom covered and to maintain a space in said receiver above said received condensate for said uncondensed fluid; and means for condensing at least a portion of said uncondensed fluid in said space including a relatively small low temperature condensing chamber in said shell, adjacent a portion of said tube sheet above said inlet chamber, through which at least some of said inlet chamber correlated tubes at their inlet positions extend, said condensing chamber being open at its bottom to the bottom of said shell exterior of said condensing chamber for flow of condensing chamber condensate to said conduit; and a pipe connecting said space with said condensing chamber for flow of said space uncondensed fluid to said condensing chamber, said condensing chamber being vented to the exterior of said shell for removal of uncondensed fluid from said condensing chamber.

SIGMUND KOPP.