Oct. 23, 1956 E. A. GIROUARD ET AL 2,767,821

SHEET FEEDING MECHANISM FOR TYPEWRITERS OR LIKE MACHINES

Filed March 29, 1954 2 Sheets-Sheet 1

Fig. 1.

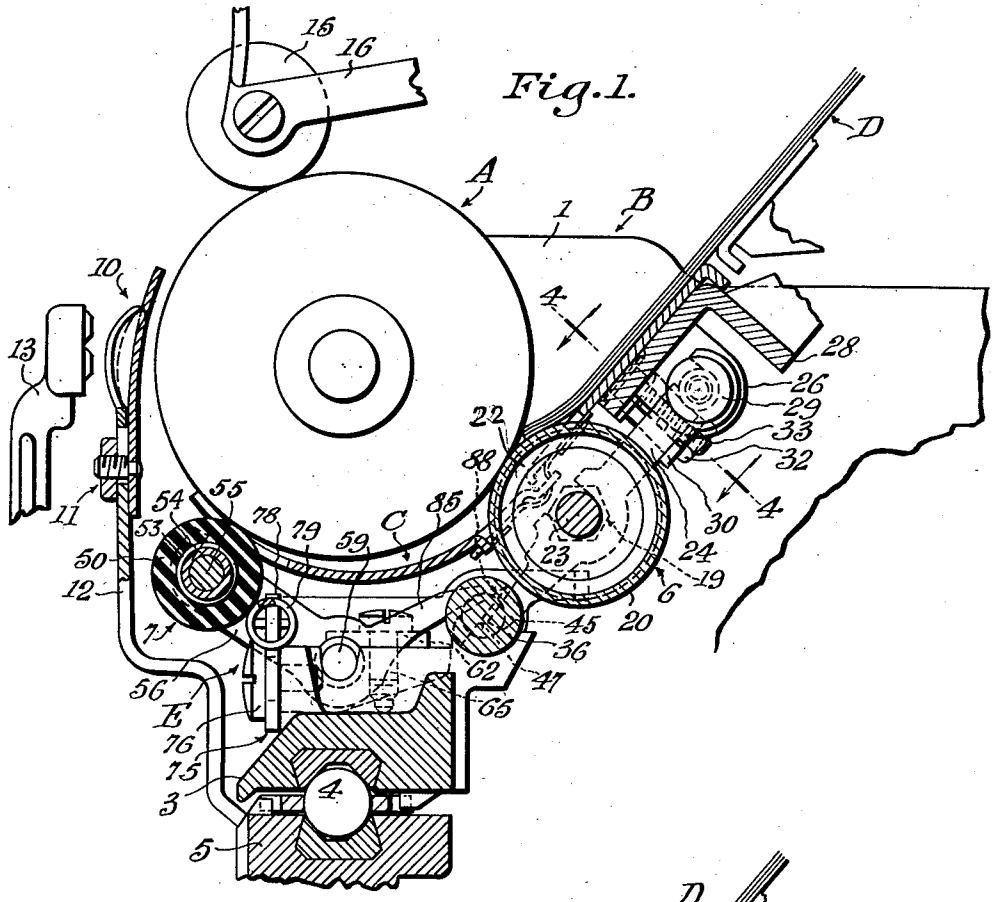

Fig. 2.

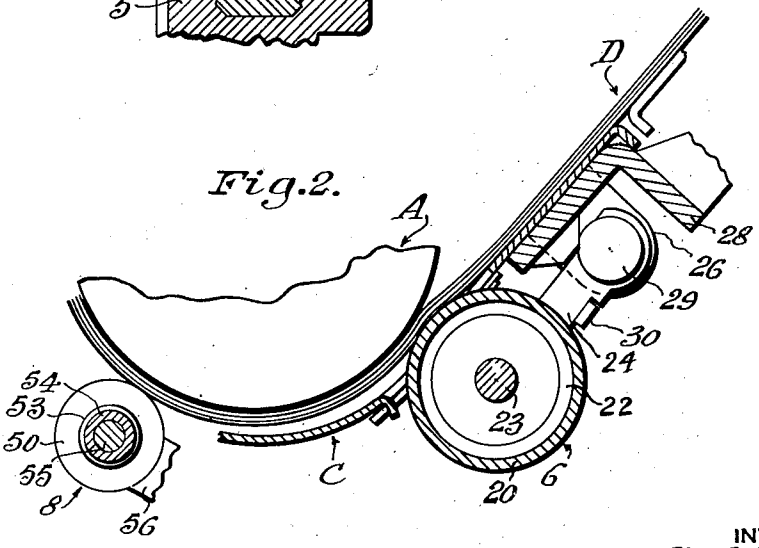

INVENTORS
EDGAR A. GIROUARD
JOHN F. KLOSKI
BY
Baldwin + Wight
ATTORNEYS

Oct. 23, 1956 E. A. GIROUARD ET AL 2,767,821

SHEET FEEDING MECHANISM FOR TYPEWRITERS OR LIKE MACHINES

Filed March 29, 1954 2 Sheets-Sheet 2

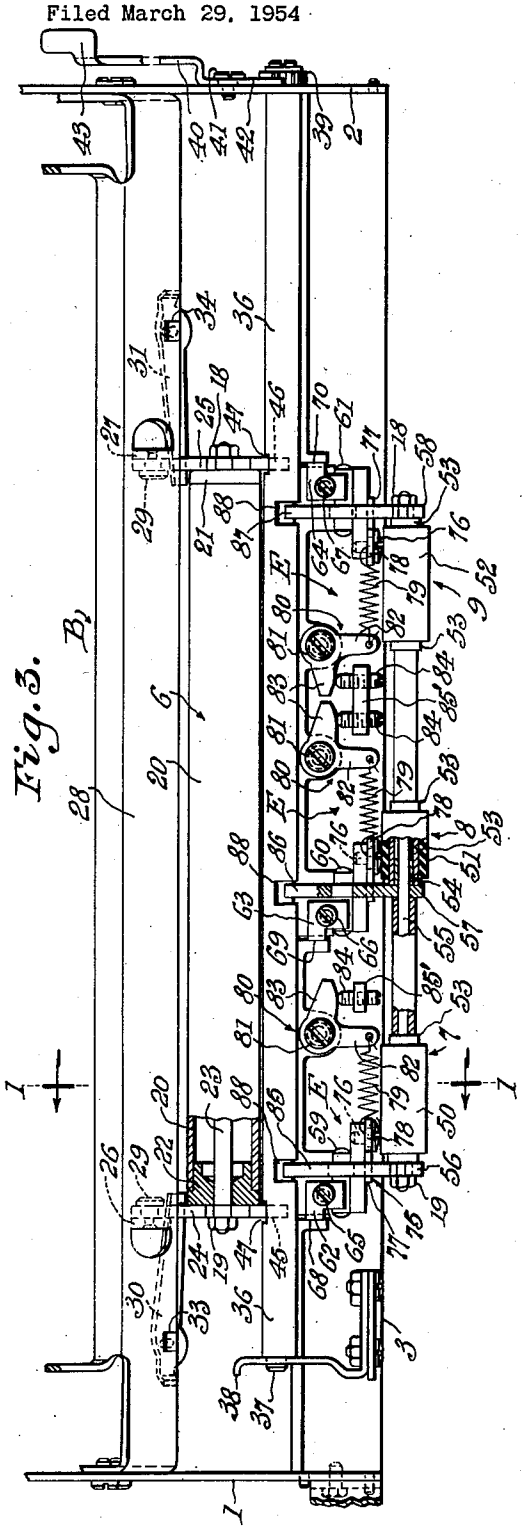

Fig. 3.

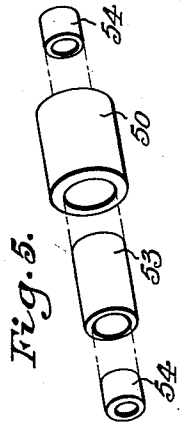

Fig. 5.

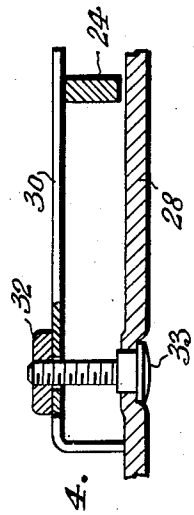

Fig. 4.

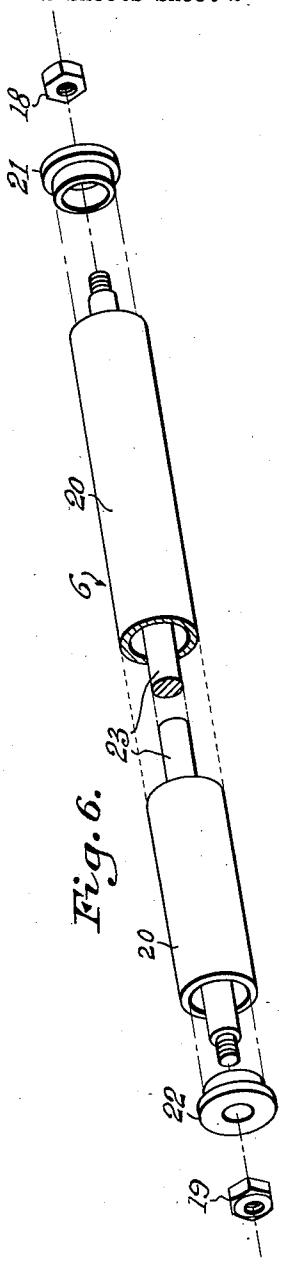

Fig. 6.

INVENTORS
EDGAR A. GIROUARD
JOHN F. KLOSKI
BY
Baldwin & Wight
ATTORNEYS

United States Patent Office 2,767,821 Patented Oct. 23, 1956

2,767,821

SHEET FEEDING MECHANISM FOR TYPEWRITERS OR LIKE MACHINES

Edgar Adelard Girouard, Marlborough, and John Felix Kloski, Hartford, Conn., assignors to Royal McBee Corporation, a corporation of New York

Application March 29, 1954, Serial No. 419,304

11 Claims. (Cl. 197—138)

This invention relates to sheet feeding mechanisms for typewriting and like machines and more particularly to improved pressure roll construction and to improved pressure coordination between the paper feeding cylinder and the pressure rolls.

Conventional typewriters of the kind including a rotatable sheet feeding cylindrical platen customarily include a paper pan extending under and circumferentially with respect to the platen for guiding and holding work sheet material against the platen, and pressure rolls engaging the work sheets for pressing them against the platen. While many such prior constructions have been generally satisfactory in operation, specific difficulties sometimes are encountered with respect to creeping of the work sheets lengthwise of the platen with consequent wrinkling due to the slack in the work sheets between the feed pressure rollers, sometimes even causing the work sheets to tear and to become misaligned with the platen.

When a paper pack composed of work sheets and carbon paper is interleaved for the purpose of making multiple copies in a single typing operation, it frequently occurs that the pressure rolls of conventional machines press so forcibly against the platen that carbon is transferred from the carbon papers to the work sheets at those points where the pressure rolls bear against the paper pack. This results in unsightly smudged copies which is an undesirable characteristic of conventional typewriters.

An object of the present invention is to provide an improved sheet feeding construction including a sheet feeding cylinder and a plurality of rolls arranged to press work sheet material against the cylinder in circumferentially spaced zones, the rolls having different sheet forwarding or feeding characteristics so related as to eliminate or reduce such difficulties to a minimum.

Another object of the invention is to provide a construction of the kind referred to in which the pressure exerting rolls have different friction characteristics.

Another object of the invention is to provide a sheet feeding construction in which pressure rolls spaced circumferentially of a cooperable sheet feeding cylinder are forced against or toward the cylinder with differential pressures so related as to eliminate or reduce the difficulties heretofore encountered.

Another object of the invention is to provide an improved individual pressure roll construction.

Another object of the invention is to provide an improved relation between the position of the pressure rolls and the pressures exerted thereby against the platen.

Other objects and advantages of the invention will be specifically pointed out or will become apparent from the following description and claims when considered in conjunction with the accompanying drawings in which:

Figure 1 is a fragmentary vertical sectional view, fore and aft of a typewriter carriage, taken along the line 1—1 of Figure 3, and showing interleaved work sheets and carbon paper at the point of introduction to the machine;

Figure 2 is a view similar to Figure 1, some parts being shown in elevation while other parts are omitted for the sake of clarity to illustrate interleaved work sheets and carbon paper in feeding relation in the machine;

Figure 3 is a top plan view of the carriage with the platen and work sheets removed, certain parts being shown in section;

Figure 4 is a fragmentary, enlarged transverse cross-section taken on the line 4—4 of Figure 1;

Figure 5 is an exploded, enlarged, perspective view of a pressure feed roller constructed in accordance with the invention; and

Figure 6 is an exploded, enlarged, perspective view of another pressure feed roller.

The invention may be embodied in typewriters or like machines of different constructions. For the purposes of illustration it is shown as being incorporated in a standard or office typewriter having some of the conventional parts customarily included in the Royal Standard typewriter. Among the known parts shown is a platen or work sheet feeding cylinder A journalled for rotary work sheet feeding movements by suitable bearings (not shown) on end plates 1 and 2 of a carriage or support frame generally designated B. The support B includes a rail 3 adapted to be supported by and to roll on balls 4 which in turn are supported by and roll on a rail 5 supported by a stationary main frame.

Interposed between the sheet feeding cylinder A and the support rail 3 is a paper pan generally designated C which preferably is of the type disclosed in the patent to Kloski, No. 2,582,783, and which is supported by the support end plates 1 and 2 in a suitable manner. A rear or work sheet introductory feed roll 6 and front pressure, work sheet propelling feed rolls 7, 8 and 9, all of which are journalled for rotation about an axis parallel to the axis of rotation of the cylinder A, are provided to cooperate with the paper pan C for guiding and assisting in the feeding of work sheet material D into operative relation to the sheet feeding cylinder A. A paper finger guide 10 is adjustably mounted on the stationary frame by means of a nut and bolt assembly 11 the bolt of which extends through a slot in a bracket 12 fixed to the stationary frame rail 5. A plurality of top sheet positioning rolls, one of which is shown at 15 in Figure 1, may be carried by a bail 16 pivoted on end plates 1 and 2 and arranged to aid in holding work sheets against the front of the sheet feeding cylinder A. As so far described, the illustrated construction is conventional. The invention resides in the relation of the characteristics of the introducing roll 6 and the propelling rolls 7, 8 and 9, the top rolls 15, and in the relative pressures by which the introducing and propelling rolls press against the sheet feeding cylinder.

The rear or work sheet introducing roller 6 comprises an elongated smoothly cylindrical tube 20 preferably formed from a hard substance which is smoothly polished so as to have a low coefficient of friction. Desirably, the composition of the tube 20 may be aluminum having a Rockwell superficial hardness rating of 82–83 (15–T) or a Rockwell "B" scale hardness rating of 66–68. An aluminum tube enables satisfactory results to be obtained, but aluminum is not to be considered as the sole material from which the tube may be made as there are other metals and plastics which possess the desired qualifications as set forth. At either end of the tube 20, an oilite or nylon bearing 21, 22 may be press fitted into the tube to journal the tube 20 on a shaft 23 which passes through and projects beyond the ends of the bearings. The threaded ends of the shaft 23 are received in notches formed in left- and right-hand hanger arms 24 and 25, respectively, and are provided with nuts 18, 19 to prevent motion of the shaft laterally of the machine. The hanger arms are pivotally mounted by means of pivot pins 29

on ears 26 and 27 struck out from a cross bar 28 carried by the end plates 1 and 2 of the support B. Also on the cross bar 28 are mounted flat springs 30 and 31 whose ends bear against the rear edges of arms 24 and 25, respectively, to urge the arms clockwise, as viewed in Figures 1 and 2, to press the work sheet introducing roll 6 against the work sheet material D extending between the introducing roller and the work sheet feeding cylinder A. The total pressure or force applied to each of the hanger arms 24 and 25, and hence the total pressure urging the introducing roller 6 against the sheet feeding cylinder A, may be regulated by means of adjusting nuts, one of which is shown at 32 in Figure 4, bearing against the rear surfaces of springs 30 and 31 and mounted on bolts 33 and 34 which project through openings in the cross rail 28 and through openings in the springs 30 and 31. To increase the total pressure exerted by the introducing roll 6 against the cylinder A, the nuts are run up on the bolts 33 and 34 which causes the springs 30 and 31 to exert a greater rocking effort on the hanger arms 24 and 25, respectively, the rocking effort being exerted in a clockwise direction as viewed in Figures 1 and 2. To reduce the total pressure exterted by the introducing roller against the cylinder, this operation should be reversed.

To enable the work sheet introducing feed roller 6 to be released, that is, moved away from the cylinder A against the force of the springs 30 and 31 so as to facilitate the insertion of work sheets, one end of a shaft 36 is rockably mounted at 37 in a bracket 38 carried by the support rail 3 as shown in Figure 3, the other end of the shaft projecting through a bearing (not shown) in the support end plate 2 and carrying a gear 39. A lever 40, pivoted as at 41 on the end plate 2, carries at one end a toothed segment 42 whose teeth mesh with the teeth of the gear 39. The other end of the lever 40 is equipped with a finger piece 43 to aid in rocking the lever 40. Rocking of the lever 40 causes the toothed segment 42 to rock the gear 39, and, consequently, shaft 36 also is rocked. Each hanger arm 24, 25 is extended downwardly and forwardly beyond the shaft 36 to provide respectively finger parts 45, 46, each of which is received in a recess 47 formed in the shaft 36. Normally, when the parts are in the positions shown in Figures 1, 2 and 3, the flat bottoms of the recesses 47 are aligned with the arm finger extensions 45, 46, and are spaced from the fingers so as to enable the arms 24 and 25 to be urged clockwise by the springs 30 and 31 without being restrained by the shaft 36. When it is desired to move the feed roll 6 rearwardly, the shaft 36 is rocked by means of the lever 40 and the cooperating toothed segment 42 and gear 39 so as to cause the bottoms of the recesses 47 to press against the fingers 45, 46 and thereby rock the hanger arms 24, 25 counterclockwise against the force of the springs 30, 31.

An important feature of this invention resides in the relation between the force or total pressure utilized to press the work sheet introducing feed roller 6 against the sheet feeding cylinder A and the force or pressure with which the rolls 7, 8 and 9 are pressed against the cylinder A. As will be clear from the foregoing description, the sole force tending to press the roll 6 against the cylinder is the force applied to the rear edges of the hanger arms 24, 25 through the springs 30, 31. As has been pointed out, the force applied to the hanger arms through the springs may be varied by the adjusting nuts 32. This invention contemplates utilizing, in an office typewriter of the general class referred to, a total pressure or force of not more than one and one-half pounds to urge the roller 6 against the cylinder A, and, preferably, the total pressure or force will be in the range of one and one-fourth to one and one-half pounds.

Total pressures within the range specified are considerably less than customarily are utilized for feed rollers located in conventional machines in a position corresponding to the roller 6. The lower total pressure acting on the roller 6 together with its smooth, polished surface changes the function of the roller 6 from primarily a sheet feeding roller to primarily a sheet aligning and guiding means, and, secondarily, the initial work sheet advancing means, coacting with the sheet feeding cylinder A and assisting in introducing work sheet material between the paper pan C and the sheet feeding cylinder A. Hence, the roll 6 has been termed a work sheet introducing roll rather than a work sheet feeding roller. Work sheets are fed or propelled by the cooperation of the sheet feeding cylinder A and the front pressure rolls 7, 8, and 9 as will be more specifically pointed out.

The front pressure of work sheet propelling rolls 7, 8 and 9, comprise a plurality of short, soft, resilient, thick-walled tubes 50, 51, 52, having a high coefficient of friction. A suitable substance from which the tubes may be formed is rubber having a durometer hardness rating within the range of 40–50; and the thickness of the walls of the tubes may be substantially equal to the radius of the bore. A tube formed of rubber in accordance with these specifications has a highly frictional surface and may be compressed substantially without causing excessive hardening of the rubber due to compacting. The substance of which the tubes are formed is preferably much softer than the substance which forms the outer surface of the cylinder A, which latter substance may be the conventional hard rubber.

In the embodiment of the invention shown, the tubes 50, 51, 52 are cemented to sleeves 53 whose ends are equipped with press fitted bronze bushings 54 journalled on a shaft 55. The shaft 55 is carried by spaced, short arms 56, 57, and 58, the short arms being rockable in unison on stub shafts 59, 60 and 61 secured to the support rail 3. As shown, the stub shafts fit into recesses formed in the support rail and are held in place by retaining plates 62, 63, 64, secured to the rail 3 by screws 65, 66, 67. Each plate is provided with a flange as shown at 68, 69, 70 adapted to fit into a correspondingly positioned recess formed in the support B so as to position the plates accurately on the rail 3. Although not shown in the drawings, the support rail 3 is provided with transversely extending slots in which the arms 56, 57, 58 are received to permit mounting of the arms on the stub shafts 59, 60, 61 without interference from the rail 3.

Separate and independently adjustable mechanisms E are provided for urging the arms 59, 60, 61 to rock clockwise as viewed in Figures 1 and 2, so as to cause the feed rolls 7, 8 and 9 to press against the work sheet material D extending between the feed rolls and the sheet feeding cylinder A. The mechanisms E may be of any suitable type, and in the form of the invention illustrated, they are of the kind disclosed in the patent to Kloski, No. 2,582,783.

Each mechanism E is similar to the other mechanisms E, and accordingly, only one mechanism will be described. A mechanism E comprises a two-armed lever 75 mounted to rock on a pivot screw 76. One arm 77 of the two armed lever 75 is formed with a rounded edge which projects under and is in contact with the arm 56, 57 or 58 supporting the shaft 55. The other arm 78 of the lever 75 is apertured for connection to one end of a spring 79, the other end of which is connected to a spring anchor 80 in the form of a two-armed lever pivoted on a screw 81. As shown in Figure 3, one arm 82 of the spring anchor lever 80 is apertured for connection to the spring 79, and the other arm 83 of the lever 80 is formed with a rounded edge which is engaged by an end of an adjusting screw 84 which has threaded connection with an ear 85' projecting upwardly from support rail 3.

Tension imposed on the springs 79 by rocking the levers 80 by the adjusting screws 84 causes the levers 75 to be rocked about the pivot screws 76 so as to raise the arms 56, 57, 58, which in turn raise the shaft 55 thereby more forcibly pressing the feed rollers 7, 8, and 9 against the sheet feeding cylinder A. Conversely, to lessen the pressure exerted on the cylinder A by the feed rollers 7, 8

and 9, the screws 84 are backed off, thus permitting reverse rotation of levers 80, as viewed in Figure 3, which lessens the tension of springs 79.

In order that the work sheet propelling rollers 7, 8 and 9 may be retracted so as to permit work sheets easily to be inserted between the rolls and the cylinder A or to be withdrawn, the arms 56, 57 and 58 are formed with extensions 85, 86 and 87 which normally extend freely into slots 88 formed in the shaft 36. When the shaft 36 is rocked by the lever 40 and the cooperating toothed segment 42 and gear 39, for releasing or retracting the work sheet introducing roll 6, the bottoms of the slots 88 will press against the arm extensions 85, 86 and 87 to rock the arms 56, 57, and 58 counterclockwise as viewed in Figure 1, thereby moving the rolls 7, 8 and 9 away from the cylinder A.

The top or bail rolls, one of which is shown at 15 in Figure 1, preferably are formed of material the same as that specified for the work sheet propelling rollers 7, 8 and 9, so that the rolls 15 may press against the work sheets to hold and guide them but, due to the resiliency of the roller material will not cause a transfer of carbon from interleaved carbon paper to the subjacent work sheets.

To accomplish the objects of the invention, when embodied in a typewriter of the character referred to and in which the pressure exerted on the rear roll 6 is of the order herein above indicated, the tension of the springs 79 should be set so that the total pressure or force exerted by the rolls 7, 8 and 9 against the cylinder A is not less than one and three-quarter pounds, and, preferably, within the range of one and three-quarter pounds to two pounds. By the term "total pressure" is meant the force required to withdraw the shaft 55, with the rolls 7, 8 and 9 mounted thereon, away from the cylinder A against the force of the springs 79. The term "total pressure" as applied to the introducing roller 6 means that the total force required to withdraw roller 6 from contact with cylinder A, against the force of springs 30 and 31, should be within the range specified, namely: one and one-fourth to one and one-half pounds.

In a typical commercial construction embodying the invention the work sheet feeding cylinder has a length of approximately nine and seven-eighths inches and a diameter of approximately one and one-half inches. The rear or introducing roll means 6 is approximately six and three-quarters inches in length and has an approximate diameter of eleven-sixteenths inch. In the illustrative embodiment, the forwarding roll means 6 comprises a single or one piece roller. The propelling roll means is shown as comprising three rollers 7, 8 and 9 the total length of which is approximately three and one-sixteenth inches and the diameter of each roller 7, 8 and 9 is approximately three-eighths inch. When rollers having these approximate measurements are located as shown in the drawings with a greater total pressure applied to the shorter rollers than is applied to the longer roller, the unit pressure exerted by the small short rollers will be greater than the unit pressure exerted by the larger longer roller due both to the greater area of contact of the larger roller, which greater area exists because of its greater length, and to the greater total force exerted on the front rollers 7, 8 and 9.

Tests have been conducted which proved the advantages of the invention. In conducting the tests a conventional typewriter was equipped with hard rubber front and rear pressure feed rolls mounted in the conventional manner, the front feed rollers having the normal total pressure application of one to one and one-fourth pounds and the rear feed roller having the normal total pressure application of two to two and one-fourth pounds. A paper pack composed of one sheet of bond paper, four sheets of manifold paper, and four sheets of carbon paper interleaved with the manifold paper was introduced into the typewriter between the feed rollers and the cylinder or platen. Near the upper left hand edge of the paper pack, the word "The" was typed. Following the typing of the upper left "The" the carriage and paper pack were letter spaced to the left and a second "The" was typed near the upper right hand edge of the paper. The paper pack then was advanced through the typewriter a certain number of lines and the word "The" typed near the lower left hand edge of the paper, this "The" being positioned in vertical alignment but below the upper left "The." The carriage and paper pack then were letter spaced to the left and a fourth "The" typed, this "The" appearing in vertical alignment and below the upper right "The." Following the typing of the fourth "The" the paper pack was fed reversely through the machine the same number of line spacing increments it had been advanced forwardly and the word "The" was typed for a fifth time, this "The" being typed at a position on the paper which should correspond to the position of the first typed or upper left "The." Then the word "The" was typed for a sixth time near the upper right hand edge of the paper in a position which should correspond to the position of the second typed "The." Had there been no slipping of the paper pack in the typewriter, the fifth and sixth typed "The's" should have been superimposed perfectly on the first and second typed "The's," respectively. Instead of being in perfect register with the first and second typed "The's" however, the fifth and sixth typed "The's" were vertically displaced relatively to the first and second typed "The's," the fifth type "The" appearing above the first typed "The" and the sixth typed "The" appearing below the second typed "The." Moreover, the fifth and sixth typed "The's" were disposed slightly to the left of the first and second typed "The's," respectively. The results of this test indicate both slipping and creeping of the paper pack in the machine. On the manifold sheets forming part of the paper pack, none of the "The's" was superimposed, and, in addition, the pressure feed rolls had caused carbon from the carbon paper to transfer to the manifold sheets where the pressure rolls had pressed against the paper pack, leaving messy, unsightly carbon streaks or smudges on the manifold sheets.

In a comparative test, the same typewriter used in the first test just described was used, with the exception that the conventional feed rolls and top or bail rolls were replaced by the metal rear feed or introducing roll and the soft rubber propelling and top rolls urged toward the cylinder by forces in accordance with the specifications set forth herein. A paper pack identical in every respect to the one used in the first test was inserted in the typewriter and the test performed in a manner identical to that of the first test. The results of the second test disclosed that the first and fifth typed "The's," that is, those near the upper left-hand edge of the paper, were superimposed perfectly and that the second and sixth typed "The's" were so nearly perfectly superimposed as to be practically in perfect register. The same results were obtained on the manifold sheets with the additional advantage that the transfer of carbon to the manifold sheets was practically eliminated. The results of the second test indicate that the improved roller constructions mounted in accordance with the total pressure values specified herein practically eliminate the objectionable characteristics of known machines.

In the second test, the work sheet introducing roll means was urged toward the sheet feeding cylinder under a total force of one and one-fourth to one and one-half pounds, and the work sheet feeding or forwarding roll means was urged toward the cylinder under a total force of one and three-fourths to two pounds. It is not necessary in all cases to use force or pressure values, either total or unit, the same as those herein set forth, but the forces acting on the introducing roll means and the forwarding roll means, and the frictional characteristics of the roll

means should be related generally in accordance with the foregoing disclosure. The construction disclosed by way of example embodies the invention in a preferred form but it is intended that the disclosure be illustrative rather than definitive. The invention is defined in the claims.

We claim:

1. In a typewriting or like machine, a support; a cylinder journalled on said support for rotary work sheet feeding movements; a first roller, said first roller having a smoothly cylindrical relatively friction free surface thereon; means mounting said first roller for rotation about an axis parallel to the axis of said cylinder and so spaced therefrom that a work sheet extending between said cylinder and said first roller is gripped therebetween with a relatively low pressure; a second roller, said second roller having a frictional surface thereon; and means mounting said second roller for rotation about an axis parallel to the axis of said cylinder and so spaced therefrom that a work sheet extending between said cylinder and said second roller is gripped therebetween with a relatively high pressure as compared with the pressure exerted by said first roller, said second roller being circumferentially displaced with respect to said cylinder from said first roller.

2. In a typewriting or like machine, a support; a cylinder journalled on said support for rotary work sheet feeding movements; a work sheet introducing roller, said introducing roller having a smoothly cylindrical relatively friction free surface thereon; means mounting said introducing roller for rotation about an axis parallel to the axis of rotation of said cylinder and so spaced therefrom that a work sheet introduced between said cylinder and said introducing roller is gripped therebetween with a relatively low pressure; a work sheet propelling roller, said propelling roller having a frictional surface thereon; and means mounting said propelling roller for rotation about an axis paralell to the axis of said cylinder and so spaced therefrom that a work sheet extending between said propelling roller and said cylinder is gripped therebetween with a relatively high pressure as compared with the pressure exerted by said introducing roller, said propelling roller being circumferentially displaced with respect to said cylinder from said introducing roller in the direction of sheet feeding.

3. In a typewriting or like machine, a support; a cylinder journalled on said support for rotary work sheet feeding movements; a smoothly cylindrical hard surfaced first roller; means mounting said first roller for rotation about an axis parallel to the axis of said cylinder and so spaced therefrom that a work sheet extending between said cylinder and said first roller is gripped therebetween with a relatively low pressure; a soft surfaced second roller; and means mounting said second roller for rotation about an axis parallel to the axis of said cylinder and so spaced therefrom that a work sheet extending between said cylinder and said second roller is gripped therebetween with a relatively high pressure as compared with the pressure exerted by said first roller, said second roller being circumferentially displaced with respect to said cylinder from said first roller.

4. In a typewriting or like machine, a support; a cylinder journalled on said support for rotary work sheet feeding movements; a work sheet introducing roller, said introducing roller having a smoothly cylindrical hard relatively friction free surface thereon; means mounting said introducing roller for rotation about an axis parallel to the axis of rotation of said cylinder and so spaced therefrom that a work sheet introduced between said cylinder and said introducing roller is gripped therebetween with a relatively low pressure; a work sheet propelling roller, said propelling roller having a soft frictional surface thereon; and means mounting said propelling roller for rotation about an axis parallel to the axis of said cylinder and so spaced therefrom that a work sheet extending between said propelling roller and said cylinder is gripped therebetween with a relatively high pressure as compared with the pressure exerted by said introducing roller, said propelling roller being circumferentially displaced forwardly in the direction of sheet feeding with respect to said cylinder from said introducing roller.

5. In a typewriting or like machine, a support; a cylinder journalled on said support for rotary work sheet feeding movements; a smoothly cylindrical hard surfaced first roller; means mouting said first roller for rotation about an axis parallel to the axis of said cylinder and so spaced therefrom that a work sheet extending between said cylinder and said first roller is gripped therebetween with a relatively low pressure; a soft surfaced second roller; means mounting said second roller for rotation about an axis parallel to the axis of said cylinder and so spaced therefrom that a work sheet extending between said cylinder and second roller is gripped therebetween with a relatively high pressure as compared with the pressure exerted by said first roller, said second roller being circumferentially forwardly displaced in the direction of sheet feeding with respect to said cylinder from said first roller; a bail mounted on said support for swinging movement about an axis parallel to the axis of said cylinder; and a work sheet pressing roller carried by said bail and swingable therewith into and out of pressing engagement with said cylinder, said work sheet pressing roller having a soft frictional surface.

6. In a typewriting or like machine, a support; a cylinder journalled on said support for rotary work sheet feeding movements; a work sheet introducing feed roller having a smoothly cylindrical, polished, relatively friction free surface and composed of a material having a Rockwell B scale hardness within the limits of 66 to 68, inclusive; means mounting said introducing roller for rotation about an axis parallel to the axis of said cylinder and so spaced therefrom that a work sheet introduced between said cylinder and said introducing roller is gripped therebetween with a relatively low pressure; a work sheet propelling roller having a surface composed of a material having a high coefficient of friction and having a durometer hardness within the limits of 40 to 60, inclusive; and means mounting said propelling roller for rotation about and axis parallel to the axis of rotation of said cylinder and so spaced therefrom that a work sheet extending between said propelling roller and said cylinder is gripped therebetween with a relatively high pressure as compared to the pressure exerted by said introducing roller, said propelling roller being circumferentially displaced with respect to said cylinder from said introducing roller.

7. A typewriting or like machine as set forth in claim 6 wherein the ratio between the pressures exerted on said first and second rolls are in the relation of the total pressure exerted on a work sheet between said introducing roller and said cylinder being not more than one and one-half pounds and the total pressure exerted on a work sheet between said propelling roller and said cylinder being not less than one and three-quarter pounds.

8. A typewriting or like machine as set forth in claim 7 including a bail mounted on said support for swinging movement about an axis parallel to the axis of said cylinder; a work sheet pressing roller carried by said bail and swingable therewith into and out of pressing engagement with said cylinder, said work sheet pressing roller having a soft frictional surface.

9. In a typewriter or like machine, a support; a cylinder journalled on said support for rotary work sheet feeding movements; work sheet introducing smoothly cylindrical roller means; means mounting said introducing roller means for rotation about an axis parallel to the axis of rotation of said cylinder and so spaced therefrom that a work sheet introduced between said cylinder and said introducing roller means is gripped therebetween; work sheet propelling roller means; and means mounting said propelling roller means for rotation about an axis parallel to the axis of rotation of said cylinder and so spaced therefrom that a work sheet extending

between said cylinder and said propelling roller means is gripped therebetween, said introducing roller means together with said cylinder constituting means for initially feeding work sheet material introduced to said typewriter or like machine, said propelling roller means being circumferentially displaced in the direction of sheet feeding with respect to said cylinder from said introducing roller means, the relative frictional sheet feeding characteristics of said propelling roller means and said introducing roller means being such that the sheet feeding tendency of said propelling roller means is greater than the sheet feeding tendency of said introducing roller means.

10. In a typewriter or like machine, a support; a cylinder journalled on said support for rotary work sheet feeding movements; work sheet introducing smoothly cylindrical roller means; means mounting said introducing roller means for rotation about an axis parallel to the axis of rotation of said cylinder and so spaced therefrom that a work sheet introduced between said cylinder and said introducing roller means is gripped therebetween; work sheet propelling roller means; and means mounting said propelling roller means for rotation about an axis parallel to the axis of rotation of said cylinder and so spaced therefrom that a work sheet extending between said cylinder and said propelling roller means is gripped therebetween, said introducing roller means together with said cylinder constituting means for initially feeding work sheet material introduced into said typewriter or like machine, said propelling roller means being circumferentially displaced in the direction of sheet feeding with respect to said cylinder from said introducing roller means, the relative frictional sheet feeding characteristics and the relative spacing of said propelling roller means and said introducing roller means being such that the sheet feeding tendency of said propelling roller means is greater than the sheet feeding tendency of said introducing roller means.

11. In a typewriter or like machine, a support; a cylinder journalled on said support for rotary work sheet feeding movements; a smoothly cylindrical work sheet introducing roller; means mounting said introducing roller for rotation about an axis parallel to the axis of rotation of said cylinder and so spaced therefrom that a work sheet introduced between said cylinder and said introducing roller is gripped therebetween with a relatively low pressure; a work sheet propelling roller; and means mounting said propelling roller for rotation about an axis parallel to the axis of said cylinder and so spaced therefrom that a work sheet extending between said propelling roller and said cylinder is gripped therebetween with a relatively high pressure as compared with the pressure exerted by said introducing roller, the ratio between the pressure exerted by said first roller on a work sheet between said first roller and said cylinder and the pressure exerted by said second roller on a work sheet between said second roller and said cylinder being approximately one and one-half to one and three-quarters, said propelling roller being circumferentially displaced with respect to said cylinder from said introducing roller in the direction of sheet feeding.

References Cited in the file of this patent

UNITED STATES PATENTS

975,228	Gibbs	Nov. 8, 1910
1,247,456	Schwartz	Nov. 20, 1917
1,367,784	Kurowski	Feb. 8, 1921
1,444,385	Phelps	Feb. 6, 1923
2,328,624	Dodge	Sept. 7, 1943