2 Sheets—Sheet 1.

I. S. VAN WINKLE.

RAILROAD-CARS.

No. 194,315. Patented Aug. 21, 1877.

Fig. 1.

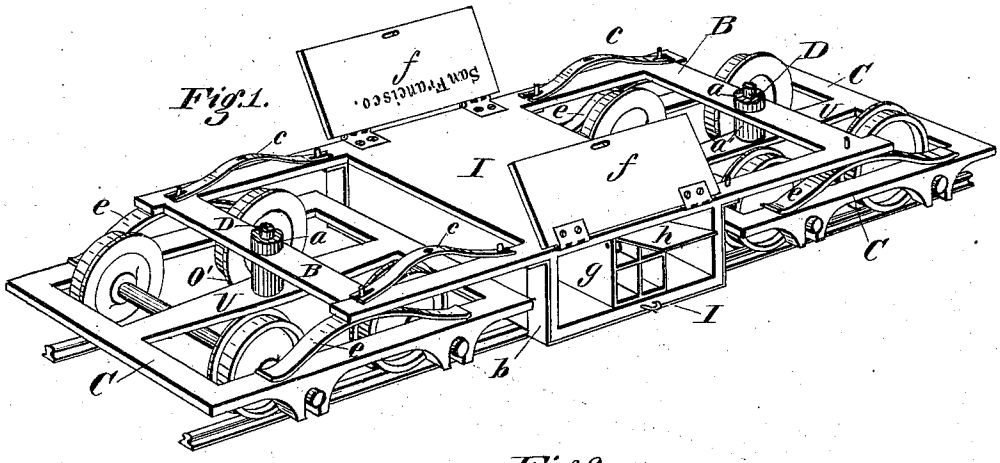

Fig. 2.

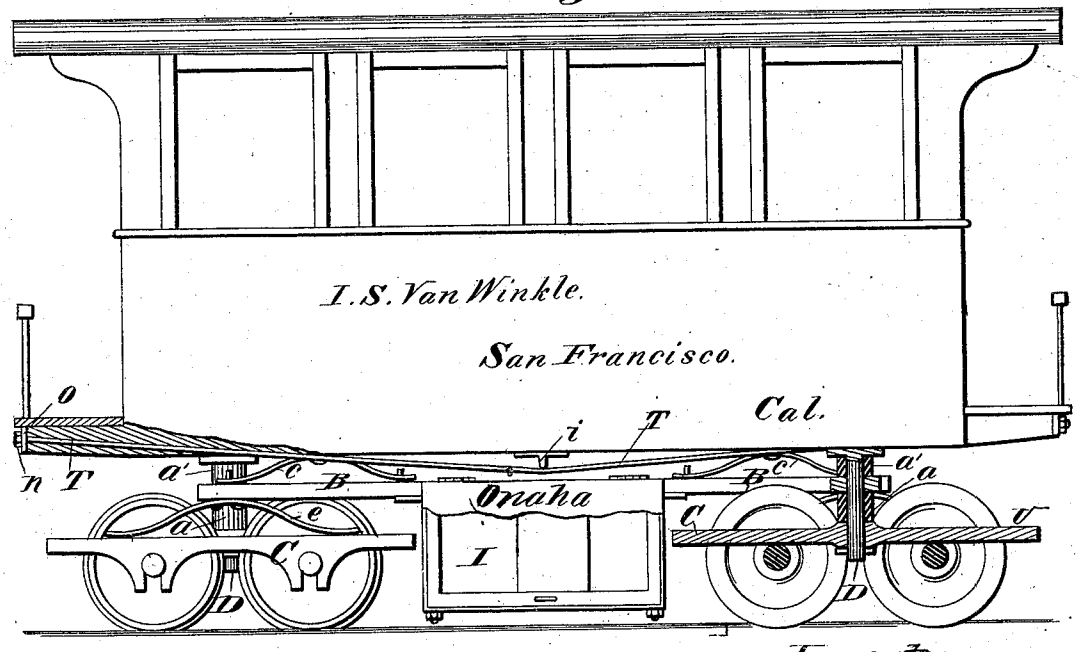

Witnesses:

Conn S. Twitchell.

Will H. Dodge.

Inventor:

I. S. Van Winkle

By Dodger & Son

Attys.

N. PETERS, PHOTO-LITHOGRAPHER, WASHINGTON, D. C.

2 Sheets—Sheet 2.

I. S. VAN WINKLE.

RAILROAD-CARS.

No. 194,315. Patented Aug. 21, 1877.

Fig. 3.

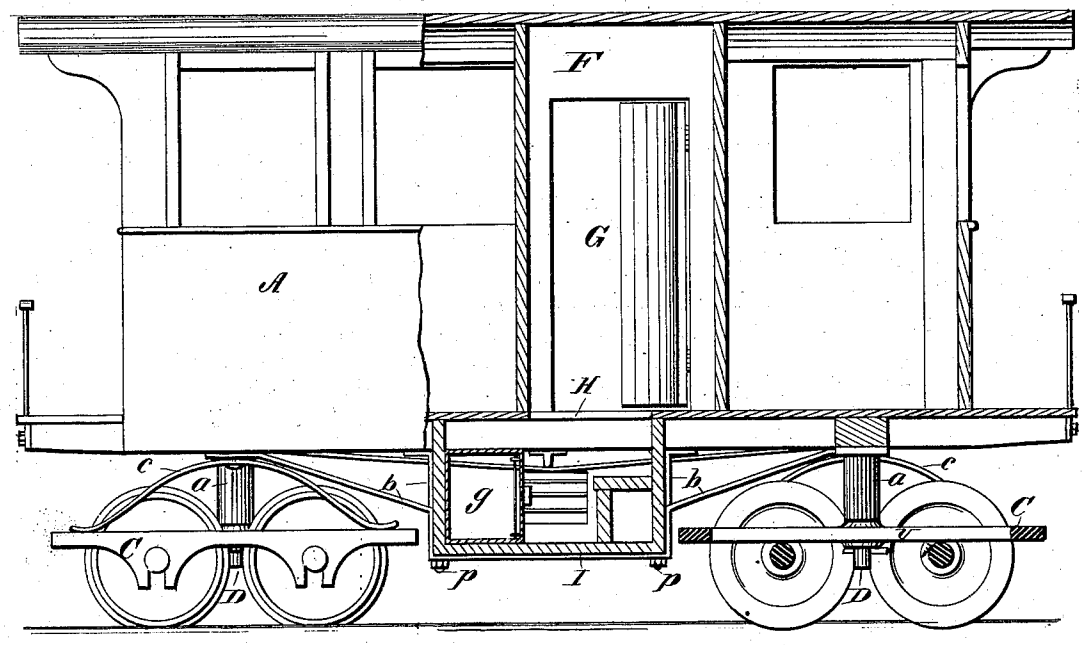

Fig. 4.

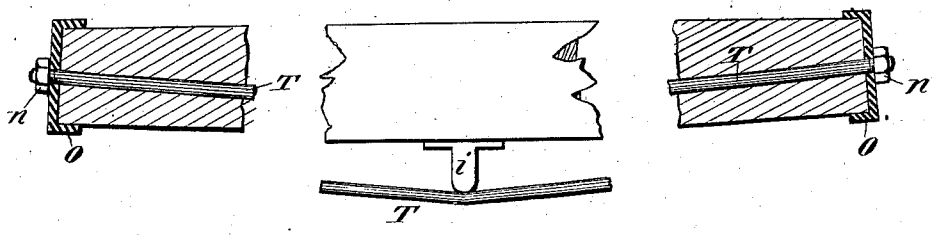

Witnesses:

Conn S. Twitchell.

Will A. Dodge.

Inventor:

I. S. Van Winkle

By Dodger Son

Attys.

N. PETERS, PHOTO-LITHOGRAPHER, WASHINGTON, D. C.

UNITED STATES PATENT OFFICE.

ISAAC S. VAN WINKLE, OF SAN FRANCISCO, CALIFORNIA.

IMPROVEMENT IN RAILROAD-CARS.

Specification forming part of Letters Patent No. **194,315**, dated August 21, 1877; application filed April 27, 1877.

To all whom it may concern:

Be it known that I, ISAAC SCHOONMAKER VAN WINKLE, of San Francisco, in the county of San Francisco and State of California, have invented certain Improvements in Railroad-Cars, of which the following is a specification:

My invention consists in certain improvements in the construction of cars, whereby they are rendered stronger and less liable to the swaying movements so common in the body of ordinary cars, and consequently less liable to jump the track or upset.

It further consists in providing ordinary passenger or freight cars with an apartment underneath the body for carrying express matter, and also providing the same with a safe for the security of valuables, together with other details, as hereinafter more fully explained.

Figure 1 is a perspective view of one form of my improved car, with the body of the car removed. Fig. 2 is a side elevation of the car, with portions shown in section. Fig. 3 is a similar view of the car, exhibiting some additional features; and Fig. 4 is a sectional view of one of the sills, showing the manner of securing the truss-rod thereto.

In the ordinary construction of cars the body rests upon two or more bolsters, to which it is secured by a king-bolt at the center, these bolsters being supported at their end by springs, which in turn bear upon the truck-frames or on bars connected thereto. The result of this construction is that the body of the car rocks more or less on the bolster, and with the bolster, as the springs at one end are depressed more than those at the other, by passing over depressions or irregularities in the track, thereby causing the body to tip and sway from side to side; and as the bodies of cars are now generally made very high and heavy, they are thereby rendered more liable to tip over, and also to jump the track.

To obviate these and other difficulties, I construct my improved car as follows: I make the body A in the usual or any desired manner, and strengthen it by means of truss-rods T, which run from end to end underneath the same, at each side, these rods passing obliquely through holes at the ends of the sills, where they are secured by a metal cap, *o*, fitting against or over the end of the sill, and a nut, *n*, as shown in Figs. 2 and 4, the latter being shown enlarged and in section, to more clearly illustrate the arrangement. At the center of the body A these rods pass under a metal bracket or stay-block, *i*, secured to the under side of the sills, as shown. By this arrangement the body is strongly braced, and, at the same time, means are provided for tightening up the truss-rods, to compensate for the shrinkage of the wood, which, as is well known, is excessive during the dry season on the Pacific slope and the plains.

The running-gear of the car consists of two truck-frames, C, mounted on wheels, as shown. These frames being made with a longitudinal central bar, U, to which the body of the car is connected by a king-bolt, D, as shown in the several figures 1, 2, and 3. Around each of these king-bolts is placed a strong spring, *a*, of rubber or metal, of any suitable construction, so that the body of the car is supported at its center on a spring, which bears centrally on the truck-frame C. In addition to these, springs *c* are connected to the body of the car at each side, so as to bear on the truck-frames at the sides, as shown in Fig. 2.

The body of the car may be mounted directly upon the trucks, as shown in Fig. 3, especially when designed to be used as freight-cars; but in making passenger-cars I prefer to use a bolster-frame, B, as shown in Figs. 1 and 2, this bolster-frame being mounted on the trucks, and then the car-body mounted on that, as represented in Fig. 2. In that case the central spring is composed of two parts, *a* and *a'*, the former being placed between the bolster-frame and the truck-frame, and the latter between the car-body and the bolster-frame, as shown. In this case there will also be required two sets of springs at the sides, one set, *c*, between the body A and the bolster-frame B, and the other set, *e*, between the bolster and truck-frames, as shown in Fig. 2.

By this construction or arrangement of parts the car is made to run much more smoothly

with less of the rocking and swaying movement of the body, which is not only disagreeable, but also dangerous, as by it cars are rendered more liable to be thrown from the track and upset. The wear and strain on the running-gear is also rendered less.

It is often desirable to carry express matter, also mail matter and valuables, such as bullion, coin, and the like, for which purpose separate cars are now used. For this purpose I construct my improved cars with a compartment, I, arranged underneath the body A, and between the two trucks. When the bolster-frame B is used this compartment or receptacle I will be secured to that, as shown in Figs. 1 and 2; but when this bolster-frame is not used it will be connected directly to the car-body, as shown in Fig. 3. This receptacle or compartment I may be made of wood or metal, preferably the latter. In either case I provide it with one or more strong metal boxes or compartments, *g*, arranged inside of the main compartment I, for receiving and safely conveying bullion, coin, or other valuables, as shown in Figs. 1 and 3, this safe *g* being provided, as shown in Fig. 1, with a door, *h*, having suitable fastenings, and over which the outer door *f* shuts, thus making it doubly secure.

In Fig. 3 there is shown a small room or compartment, F, at the center of the car on one or both sides, provided with a door, G. Through the floor of this room F I make an opening, H, leading into the box or compartment I, so that access may be had from the inside of the car to the box I, the opening H also being provided with a door, with means for securing the same. By constructing these express compartments I with this inside entrance the end doors *f* may be omitted, the ends being closed tight, thus rendering them far more secure against thieves, as in such case there would be no access to it except from the inside of a car filled with passengers.

These boxes or compartments I are to be strongly built, and, as shown in Figs. 1, 2, and 3, are secured firmly to the body of the car or to the bolster-frame by means of bolts *p* and iron bands *b*, thus securing them firmly in place, and making them very strong and secure.

In case there is more matter than can be stored in the compartment I, the balance may be stored in the room F, which may be extended entirely across the car, if desired, and which may also be constructed wholly of iron or steel, whereby it will be rendered far more secure against both thieves and fire.

By this plan not only is the ordinary passenger-car provided with means for carrying express packages and valuables, thus dispensing with the use of separate cars for that purpose; but the articles are rendered more secure, as in such case it would not be possible for the express messenger to be seized and bound or killed by one or two burglars in the presence of a car filled with passengers, as is frequently done when in a separate car, the noise of the train preventing his cries of alarm from being heard.

Another advantage of this arrangement is that by thus bringing the weight of the contents of the box I so low down, and below the bottom of the car, it acts as ballast, and tends to prevent the car from rocking or tipping, as it otherwise would, thereby causing it to run much more steady, rendering it more pleasant to ride in, and lessening the danger of its leaving the track, or being upset, and of course lessening the wear upon the wheels and other parts of the running-gear.

It is obvious that these express compartments or boxes I may be applied to freight-cars as well as to passenger-cars, but it may not be desirable, except upon those used on what are termed fast-freight lines, unless it be to render more secure the conveyance of articles of value.

By this plan of combining the express compartments with passenger-cars, the services of the express-messenger may also be dispensed with, as all that will be necessary is to lock up or properly secure and seal the compartments I and F, and let the car go, the presence of the passengers rendering the contents far more secure than would the presence of a single messenger, the proper person, of course, being in attendance at the stations to take charge of the same on arrival of the train.

By this plan, also, the express matter for several places on the route may be kept separate, as there will be as many of these receptacles as there are cars in the train, which is an additional advantage, as it will avoid the loss of time incident to the selecting of packages from the mass for any particular station, and also lessen the liability of packages being carried beyond their proper point, or the wrong ones being accidentally left, as each may be marked with the name of the station for which it is intended, and none except that one need be opened at that station.

I am aware that it is not new to use the tubular spring with a king-bolt between the body and the truck, and therefore I do not claim that as my invention.

I am also aware that cars have been patented showing a box under the body for storing provisions for both passengers and stock, and also with safes in the corners of the car-body, and therefore I do not claim any of these; but I am not aware that a car has ever before been constructed with a safety compartment underneath the body for the secure transportation of valuables; and therefore

Having thus described my invention, what I claim is—

1. In a railway-car the central tubular springs *a* and the elliptic side springs, both arranged between the body of the car and the truck-frames, as shown and described.

2. The bolster-frame B, secured by the king-bolts D, in combination with the central springs *a* and *a'* and the side springs *c* and *e*, all arranged to operate in connection with the trucks and body of a car, substantially as described.

3. The box I, provided with one or more metallic boxes or safes, *g*, for the safe transportation of bullion or other valuables arranged underneath the bolster-frame or car-body, substantially as shown and described.

ISAAC SCHOONMAKER VAN WINKLE.

Witnesses:

GEO. WEGENER,

JAS. D. BAILEY.