United States Patent

[11] 3,563,245

[72] Inventors Donald Neil McLean
P.O. Box 317, L'Orignal, Ontario;
Jacob Rosensweig, 5609 Blossom Ave.,
Cote St. Luc 29, Quebec, Canada; John
Saunders, 113 Arnold Drive, East
Hartford, Conn. 06108

[21] Appl. No. 713,400
[22] Filed Mar. 15, 1968
[45] Patented Feb. 16, 1971

[54] BIOLOGICALLY IMPLANTABLE AND ENERGIZED POWER SUPPLY
6 Claims, 5 Drawing Figs.

[52] U.S. Cl. 128/419
[51] Int. Cl. A61n 1/00
[50] Field of Search ..... 128/419, 419 (P), 423, 424; 310/36, 37

[56] References Cited

UNITED STATES PATENTS

3,358,690 12/1967 Cohen 128/419

FOREIGN PATENTS

1,460,772 10/1966 France 128/419P

OTHER REFERENCES

Myers et al. " American Journal of Medical Electronics" Oct— Dec, 1964, pp. 233— 236, 128/419P

Primary Examiner—William E. Kamm
Attorney—Raymond A. Robic

ABSTRACT: The disclosure relates to an electric generation system or device which finds useful application in the power supply units of totally implanted electronic devices such as heart pacemakers; it is particularly intended as an advantageous alternative to limited duration implantable power supplies generally used. The resulting novel power supply unit utilizes fluid pressure transfer means for tapping a small fraction of the energy derived from the muscular contractions of the heart and transmitting same to a remotely implanted generator wherein the tapped energy is converted to electrical energy.

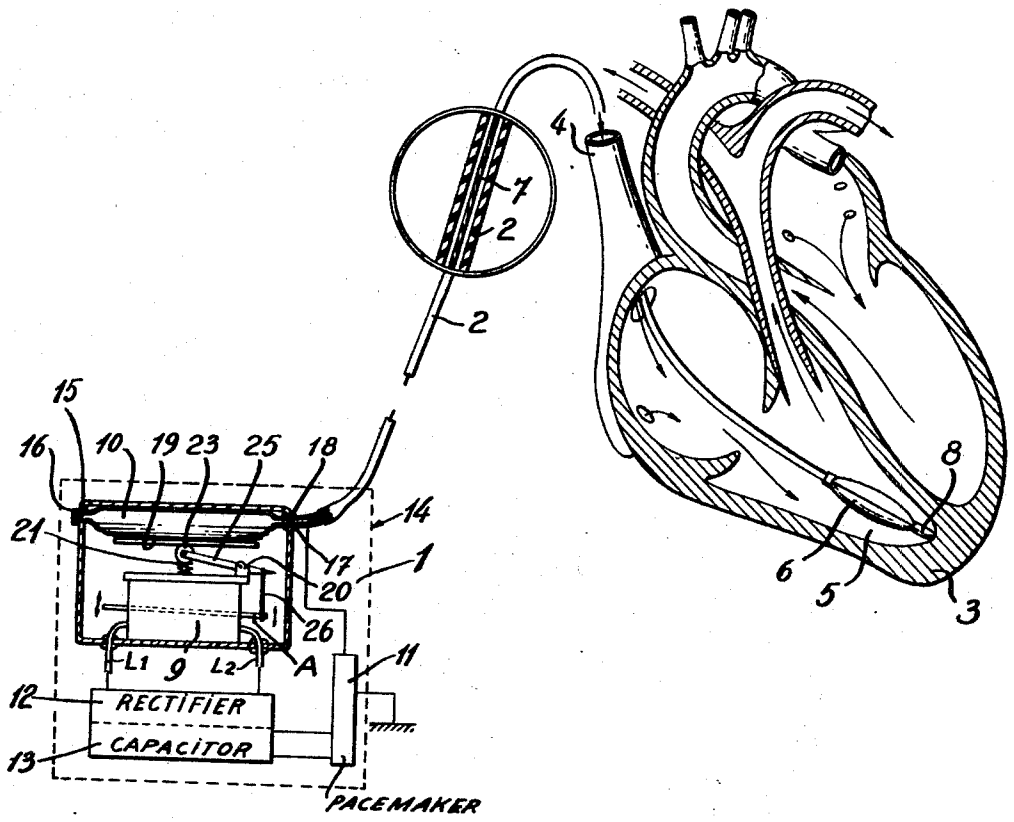

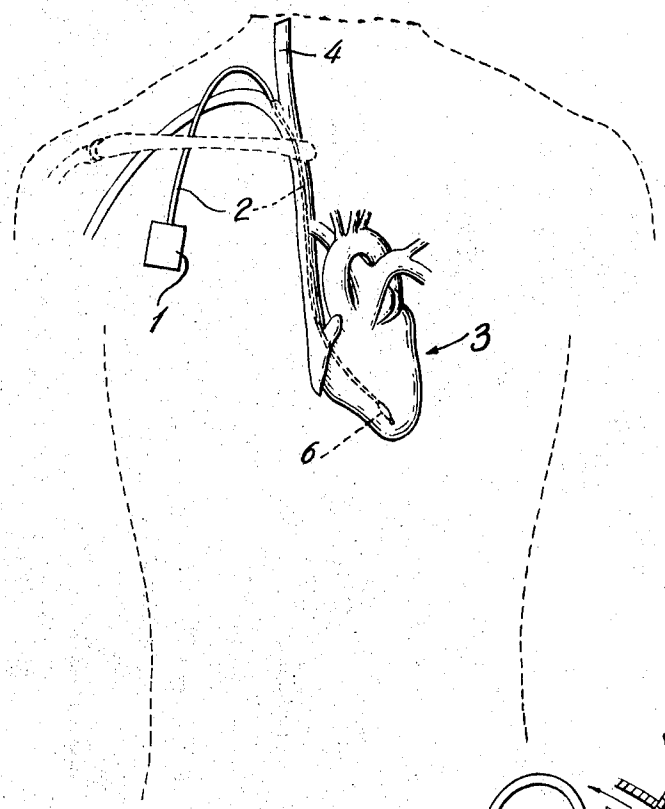

Fig. 1

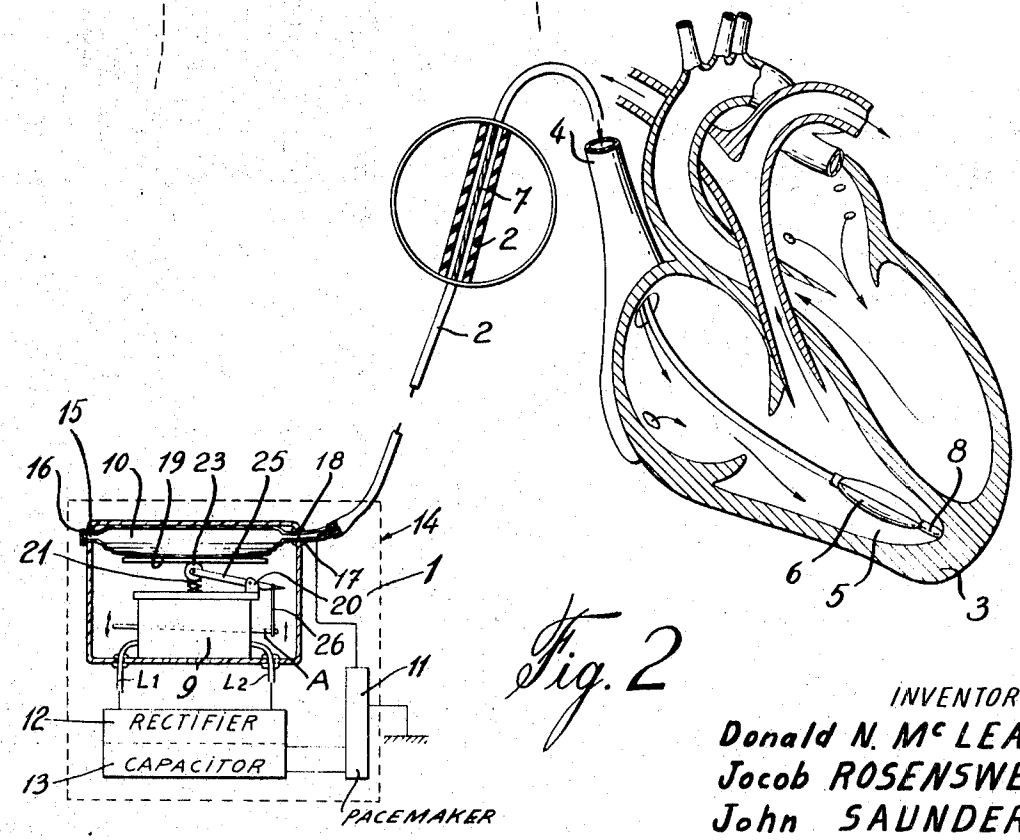

Fig. 2

INVENTORS
Donald N. McLEAN
Jocob ROSENSWEIG
John SAUNDERS
BY
Raymond A. Robic
ATTORNEY

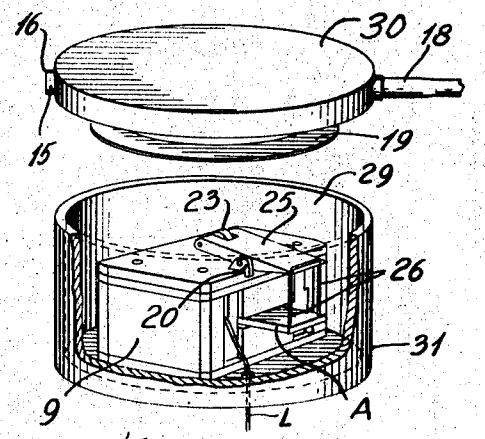

Fig. 3

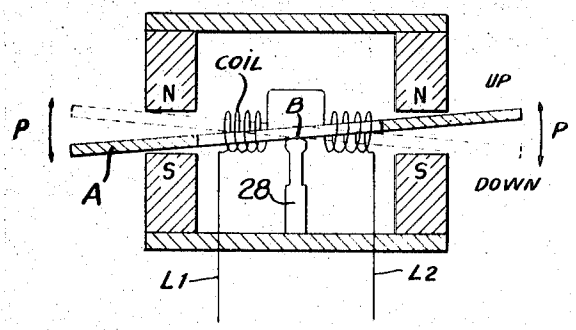

Fig. 4

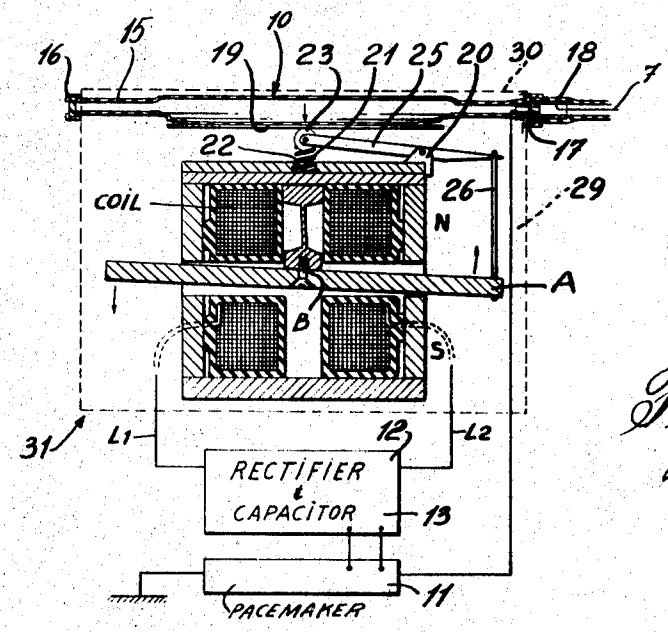

Fig. 5

INVENTORS
Donald N. McLEAN
Jocob ROSENSWEIG
John SAUNDERS
BY
Raymond A. Robic
ATTORNEY

BIOLOGICALLY IMPLANTABLE AND ENERGIZED POWER SUPPLY

The invention relates to an improvement in biologically implantable power supplies of the type commonly used in implanted electronic devices, such as heart pacers which are also known and will be referred to hereinafter as cardiac pulse generators or Pacemakers.

The field of implantable medical electronics is relatively new; it has already yielded some remarkable results and holds a promise for much more. Outstanding among the achievements realized to date are those relating to Pacemakers which have already provided life saving relief to countless sufferers of Stokes-Adams disease by artificially restoring the proper rhythmic stimulation to their failing hearts.

Pioneering experiments in the field of Pacemaker technology were carried out in or about the year 1952 jointly by Paul Zoll and a team of engineers from the Electrondyne Company. The early Pacemakers were externally worn and therefore quite uncomfortable and bulky. It is generally recognized that the development of the first internally worn or totally implanted Pacemakers took place in or about the year 1960 and the credit therefor goes jointly to two independent teams of investigators which included such outstanding contributors as Wilson Greatbach, William H. Chardack, Adrian Kantrowitz and many others. It is remarkable that most of the advances realized to date have related directly to the development of improvements in the electronic circuitry of the Pacemaker and electrode systems.

Regardless of the inconveniences resulting therefrom, limited duration batteries are still the basic component in every implanted power supply unit. Although mercury cells are presently used in most Pacemaker power supplies, these are still incapable of supplying the required power for longer periods than 3 years. It is the general practice to have the batteries replaced or replenished every 2 years or so, which means that all users of implanted Pacemakers have to live with the prospect of being subjected to a minor but, nevertheless always hazardous power replenishment surgery every second year or so for the rest of their lives. This is definitely a most objectionable feature of existing Pacemakers.

The power supply of the present invention is intended as a substitute for the hitherto used battery powered type of power supply; unlike the latter it is not an accumulator of all the energy to be used over a lengthy period but a power supply which borrows the necessary energy from the body and converts it into electricity at a rate commensurate with the power demand of the Pacemaker.

The power supply of the invention is an important step toward restoring a sense of security and self-sufficiency to the user of a Pacemaker or the like, in the sense that it liberates him from his former near total life dependency and reliance on the good condition of his implanted power supply and immediate availability at all times of the required skills, facilities and materials for the emergency performance of a replenishment surgery in case of a sudden and unexpected battery failure.

The power supply of the invention works on the principle that the muscular contractions and relaxations of the tissues of the heart are reflected in pronounced rises and falls of the static blood pressure within the ventricles thereof, so that the effect of these pressure fluctuations detected within the ventricle and channeled therefrom to the power supply wherein it is applied to an appropriately designed electromechanical generator; a pulse of electricity will result which can then be subjected to rectification and accumulated for supplying the required power to the Pacemaker proper or whatever implanted electronic device is connected thereto. The generator used is one which readily lends itself to realization in highly compact form. It presents only few moving parts, the total displacement of each of which can be made so minute as to be almost imperceptible; as a result, the generator is relatively free from wear even after prolonged continuous use of duration exceeding the normal remaining life expectancy of any user.

Furthermore, the generator exhibits an unusually high rate of energy conversion efficiency, which means that it only requires to draw infinitesimal energy from the heart in order to produce the very small quantity of electricity needed for energizing a Pacemaker or the like implanted electronic device connected thereto.

A basic object of the present invention is to provide a miniaturized electromagnetic generator sensitive to the motion of cardiac contraction and arranged so that the electrical energy generated will be stored in a capacitor for use in a Pacemaker to produce the required rhythmic electric impulse or in other implanted electronic devices. This electromagnetic (electromechanical) generator according to the invention is adapted to generate alternating potentials proportional to the time rate-of-change of magnetic flux in a mechanically oscillating system. To obtain sufficient voltage when operating slowly, the moving armature must be arranged to snap completely over after part of the stroke has been completed. A second power pulse occurs on the return stroke. The generator can be properly matched to the Pacemaker by adjustments of the number of turns and gauge of wire on the coil. The efficiency is limited mechanically only by frictional and spring hysteresis and electrically by coil-resistance, magnetic hysteresis, and eddy current damping.

Further objects and advantages of the present invention will be apparent from the following detailed description and drawings, in which:

FIG. 1, in general, shows the manner in which the heart pacer assembly is totally implanted in the human body and connected with the heart;

FIG. 2, in detail, illustrates the heart pacer arrangement according to the invention including its activating source in the form of a pressure transducer buried in the heart; details are also shown in this particular figure as to the mode of connecting the heart pacer with the heart;

FIG. 3, in detail, shows the airtight housing or box in which the heart pacer unit is fixedly secured;

FIG. 4, in detail, illustrates the basic operation principle of the power generator according to the invention; and

FIG. 5, in detail, shows the complete and actual arrangement of the heart pacer unit embodying the present invention.

Although it has been said that the power supply of the invention is intended for use in combination with any implantable electronic devices, throughout the disclosure hereinafter and in the drawings reference is made, for convenience, to the particular combination with a Pacemaker. It should be understood that the choice of the particular combination does not restrict the scope of the invention in that respect.

Referring now to the drawings, wherein like reference numerals are used in the various areas to designate like parts, FIGS. 1 and 2, in detail, show a Pacemaker assembly according to the invention, generally indicated at 1 and, the manner in which this assembly is totally implanted in the human body and connected to the heart 3.

As can be seen from FIG. 1, the heart pacer unit 1 is connected with the heart 3 by means of a hollow, intravenous catheter tube 2, made of any suitable material, such as for example plastic, via a large vein 4, in this case the jugular vein. The tube 2, in this instance, terminates in the right ventricle 5 of the heart 3, FIG. 2, and is, in that location, integrally attached to an intracardiac pressure transducer 6 in the form of a small, compressible and airtight balloon or bag filled with a predetermined amount of gas. Run through the tube 2 is an electrical conductor 7 which with its one end is connected to the unit 1 and with its other end to an electrical contact point or electrode 8 provided at the tip of the transducer 6 and arranged so that it touches the tissues of the heart, FIG. 2, in order to periodically deliver the small electrical heart pulse energizing impulses emanating from the pacer unit 1.

The pacer unit 1, as shown in FIG. 2, in effect, constitutes the combination of (a) a miniaturized electromechanical power generator 9 activated by an inflatable and deflatable mechanical pressure transmitter device 10 coupled thereto

and, (b) an electronic cardiac Pacemaker (pulse generator) **11**, known per se, connected to the generator **9** via an AC-rectifier(s) **12** and a storage capacitor(s) **13**.

These individual devices (the power generator **9**, the transmitter device **10**, the Pacemaker **11**, the rectifier(s) **12** and, the capacitor(s) **13** are assembled into one unit and housed in a hermetically sealed casing **14** covered with a suitable biologically acceptable encapsulating material (not shown), such as for example silicon rubber; a material which, following implantation will not be rejected by the body and constitutes appropriate insulation for the pacer unit from the electrolytic fluids within the human body.

Initially, before describing in more detail the devices embodying the present invention as well as the more important aspects thereof, it would be helpful to briefly consider their principles of operation.

As is known, the heart forms a hollow, muscular organ that pumps the blood by alternate contractions and relaxations to cause circulation thereof through the body.

It is with the help of the alternate muscular contraction and relaxation of the heart in conjunction with the transducer **6** inserted therein, that the pacer unit **1**, permanently implanted and disposed at any suitable and convenient location inside the human body but remote from the heart, is powered to produce the rhythmic electrical impulses which are fed back to the heart.

The transducer **6** serves a triple purpose, namely (a) it senses the pressure inside the ventricle of the heart wherein it is lodged; (b) it is sensitive to the myocardial activity in the heart; it contracts and expands along with the contraction and dilation of the heart whereby the gas inside the transducer is alternately forced out of and sucked back into the transducer thereby, via the tube **2**, alternately inflating and deflating the bellow **10** which, in turn, activates and deactivates the generator **9** which, as a result thereof, generates the necessary electrical energy, in this case a pulsed alternating current, of the required magnitude to power the Pacemaker **11**; (c) it forms a support for the electrode **8** connected via the electrical conductor **7** in the tube **2**, with the Pacemaker **11**.

It will be understood that the ventricle pressures and variations thereof are picked up by the transducer and pneumatically (the gas in motion) transmitted, via the tube **2** is converted into mechanical force by the bellow **10**. This mechanical force is applied to the armature A of the generator **9**, which is adapted to convert this mechanical energy into an alternating electric potential.

The alternating current generated is sequentially rectified, regulated and stored and, periodically supplied to the Pacemaker **11** in order to produce pacing pulses (the heart stimulation charges) which, rhythmically and at a predetermined rate, are transmitted to the heart via the wire **7** and the contact point **8**.

Detailed reference will now be made to the heart pacer unit and more in particular to the exact manner in which the electric power is generated.

The power generator assembly of FIG. **2**, as also known in FIGS. **3** and **5**, is seen to comprise the bellow **10**, which may be provided with a bias pressure injection and/or bleeding valve **16** for regulating the amount of gas in the system (the transducer **6**, the tube **2** and the bellow **10**), and at the other side is provided with an opening **17** which, via an airtight joint comprising a metallic stem **18**, is connected to one side of the hollow tube **2**.

Provided at the lower side of the bellow **10** is a disc **19** which, when pressure is applied to the transmitter (i.e. when the transducer is compressed), relays this pressure to the armature A of the generator **9** via a leverage mechanism, generally indicated at **20**, consisting of a compression spring **21** connected with its one end inside the fixed upper part **22** of the generator **9** and with its other end contacting disc **19** via a roller connection **23** provided to prevent friction; connected to the roller connection **23** is a leverage plate **25** pivotal between the brackets **20** and coupled to the armature A via a link **26**. Operation of this leverage mechanism depends on the inflation and deflation of the bellow **10**, i.e. when the bellow is extended, the disc presses, against the compression spring **21** and through the leverage action the armature A is caused to assume position "UP," FIG. **4**, and when the bellow is retracted, the spring relaxes and the armature assumes position "DOWN," FIG. **4**.

The armature A is rotatable inside the generator **9** such as around a bronze blade spring **28**, FIGS. **4** and **5**. When pressure (P) from the bellow **10** is applied to the armature A, FIG. **4**, it moves and pivots around axis B, of the hinge **28** through an arc of only a few degrees between the magnetic pole pieces N and S in its forward stroke toward the pole pieces of opposite polarity. When the armature is slightly passed the neutral plane, midway between the pole pieces N and S, it is attracted to the other pole pieces and snaps in its new position to complete its forward stroke. The small displacement of the armature is sufficient to cause a complete and rapid reversal of the lines of force induces electric energy into the coils L surrounding the armature. When the force at P, FIG. **4**, is removed due to deflation of the bellow **10**, the armature snaps back thereby again producing electric current on its backward stroke. In this manner, we have a permanent source of pulsed AC electricity.

The alternating current thus generated is applied via leads L_1 and L_2, FIGS. **2** and **5**, to the rectifier **12** where it is rectified and is subsequently stored in capacitor **13** from which the input current for the Pacemaker is drawn.

Incorporated in the unit there may be a voltage regulator, not shown, which would permit utilization of such a generator maintaining the electric energy generated at a predetermined value or varying it according to a predetermined plan.

As shown in FIGS. **2**, **3** and **5**, the power unit proper may be lodged in a separate housing **29** consisting of the fluidtight combination of a lid **30** secured to a case **31**. The bellow or expansible chamber **10** is located at the underside of lid **30** and in communication therethrough with the pneumatic system through tubular connection **17** therewith. There may also be provided a conduit **15** which is closed by a self-sealing membrane or valve such as plug **16** of a sealant grease or rubber of silicone in such manner that the bias pressure of the gas within the system may be adjusted initially and from time to time thereafter, by appropriate injection or removal of gas such as through puncturing of the closure membrane **16** by means of an hypodermic needle (not shown in the drawing) or the like. It is contemplated that a conduit such as **15** could also be used for connection to and with an automatic pressure monitoring device which would include a compact reserve supply of the gas at high pressure, to restore the bias pressure of the system.

The gas used as pressure vehicle in the pneumatic system is preferably one of relatively high molecular weight in order to lessen the effect of gas losses which can result from permeation thereof through the system's boundary materials. Also, because there is bound to be a degree of gas permeation, it is preferable to select an inert gas or one which can be absorbed in the bloodstream without ill effects.

If necessary, provisions can be made to lodge the rectifier/capacitor unit (**12** and **13**) with the power generator unit within the same cylindrical housing or box **29** so as to obtain one solid and compact unit to which, via suitable input and output leads or terminals, one or more implanted devices can be connected, i.e. aside from activating a Pacemaker (as is presently the case) the above-described power generator assembly can also be used to power various other, totally implanted devices, such as bladder stimulators, electrically activated artificial limbs, stimulators of the carotid sinus nerve (in patients with uncontrollable hypertension), telemeters for biological phenomena, as well as numerous applications in biological investigations in space research, etc.

It will be appreciated that the mode of supplying electrical impulses to the heart is not just restricted to the one employed in the embodiment described hereinbefore; it is for example possible to conduct these pulses to the heart by means of a

number of electrodes set into the heart muscle or, by such an electrode and a large indifferent or ground electrode, etc.

We claim:

1. A biologically implantable and energized power supply for implanted electric and electronic devices, comprising:

a. Fluid pressure sensing means to be disposed inside a heart ventricle for detecting fluid pressure variations therein;

b. an energy conversion unit to be disposed outside the heart;

c. fluid pressure transfer means connected to said fluid pressure sensing means and to said energy conversion units; said energy conversion unit comprising:

d. means for converting said fluid pressure variations into reciprocal motion;

e. an electromagnetic generator having a reciprocally rotatable armature;

f. means for communicating said reciprocal motion to the reciprocally rotatable armature and thereby convert same therein to corresponding alternating current pulses of electrical energy;

g. rectifier means connected to said electromagnetic generator for rectification of said alternating current of electrical energy to corresponding direct current pulses of electrical energy;

h. accumulator means connected to said rectifier means for storage therein of the energy in said direct current pulses of electrical energy; and

i. connector means connected to said accumulator means for connection thereto of said implanted electric and electronic devices.

2. A biologically implantable and energized power supply as claimed in claim 1, wherein, collectively, said fluid pressure sensing means, fluid pressure transfer means and, means for converting fluid pressure variations into reciprocal motion, comprise a closed fluid system which includes a pair of fluid filled expansible bodies and a flexible tubular conduit connected to said expansible bodies and extending between them.

3. A biologically implantable and energized power supply as claimed in claim 2, wherein said closed fluid system is pneumatic.

4. A biologically implantable and energized power supply comprising:

a. Fluid filled pressure sensing and transfer means consisting of a first expansible chamber forming device adapted to be disposed within a heart ventricle, a tubular member connected at one end to said first expansible chamber forming device and adapted to extend therefrom through at least one heart valve and to extend outwardly toward a body a position remotely disposed with respect to the heart, a second expansible chamber forming device is connected to the other end of said tubular member;

b. said first and second chamber forming devices and tubular member containing a pneumatic fluid;

c. means associated with said second expansible chamber forming device whereby to convert expansions and contractions thereof into corresponding reciprocal motion;

d. an electromagnetic generator;

e. mechanical means for applying said reciprocal motion to the electromagnetic generator and cause generation thereby of a corresponding alternating current of electricity;

f. rectifier means electrically connected to said generator for effecting conversion of said alternating current of electricity into a pulsed direct current of electricity;

g. capacitive means connected to said rectifier means for accumulation and storage therein of said electricity; and

h. means for connection to said capacitive means of electrically operating implanted devices.

5. A biologically implantable and energized power supply for implanted power consuming devices comprising:

a. Detector means adapted to be disposed in the heart and whereby to produce a pneumatic signal in response to the blood pressure variations detected therein;

b. translation means adapted to be disposed outside the heart, whereby to transform pneumatic pressure variations into reciprocal motion;

c. tubular conduit means connecting said detector and translation means for transmission therethrough of the pneumatic signal of and from the detector to the translation means;

d. an electromagnetic generator having a reciprocally rotatable armature;

e. mechanical means for communicating said reciprocal motion to said armature and thereby cause generation of a correspondingly pulsed alternative current of electrical energy;

f. rectifier means electrically connected to said electromagnetic generator for converting the pulsed alternative current of electrical energy to a similarly pulsed direct current of electrical energy;

g. accumulator means electrically connected to said rectifier means for storage therein of the energy from said pulsed direct current of electrical energy; and

h. connector means on said accumulator means for connection thereto thereby of said implanted power consuming devices.

6. A biologically implantable and energized power supply, as claimed in claim 5, wherein the implanted power consuming device connected to said accumulator is a cardiac pulse generator wherefrom a pulsed electrical signal produced therein is directed through an insulated electrical wire conductor to an electrode adapted to be disposed inside the heart and, wherein said insulated electrical wire conductor is disposed in and coextensive with the said tubular conduit means.