(12) INTERNATIONAL APPLICATION PUBLISHED UNDER THE PATENT COOPERATION TREATY (PCT)

(19) World Intellectual Property Organization
International Bureau

(43) International Publication Date
14 June 2001 (14.06.2001)

PCT

(10) International Publication Number
WO 01/41858 A2

(51) International Patent Classification[7]: A61M 25/00

(21) International Application Number: PCT/US00/33476

(22) International Filing Date: 7 December 2000 (07.12.2000)

(25) Filing Language: English

(26) Publication Language: English

(30) Priority Data:
09/457,502 8 December 1999 (08.12.1999) US

(71) Applicant *(for all designated States except US)*: **DURECT CORPORATION** [US/US]; 10240 Bubb Road, Cupertino, CA 95014 (US).

(72) Inventors; and

(75) Inventors/Applicants *(for US only)*: **GILLIS, Edward, M.** [US/US]; 1202 Stafford Drive, Cupertino, CA 95014 (US). **FILICE, James, A.** [US/US]; 1555 Elwood Drive, Los Gatos, CA 95032 (US). **THEEUWES, Felix** [BE/US]; 27350 Altamont Road, Los Altos Hills, CA 94022 (US).

(74) Agent: **BORDEN, Paula, A.**; Bozicevic, Field & Francis LLP, Suite 200, 200 Middlefield Road, Menlo Park, CA 94025 (US).

(81) Designated States *(national)*: AE, AG, AL, AM, AT, AU, AZ, BA, BB, BG, BR, BY, BZ, CA, CH, CN, CR, CU, CZ, DE, DK, DM, DZ, EE, ES, FI, GB, GD, GE, GH, GM, HR, HU, ID, IL, IN, IS, JP, KE, KG, KP, KR, KZ, LC, LK, LR, LS, LT, LU, LV, MA, MD, MG, MK, MN, MW, MX, MZ, NO, NZ, PL, PT, RO, RU, SD, SE, SG, SI, SK, SL, TJ, TM, TR, TT, TZ, UA, UG, US, UZ, VN, YU, ZA, ZW.

(84) Designated States *(regional)*: ARIPO patent (GH, GM, KE, LS, MW, MZ, SD, SL, SZ, TZ, UG, ZW), Eurasian patent (AM, AZ, BY, KG, KZ, MD, RU, TJ, TM), European patent (AT, BE, CH, CY, DE, DK, ES, FI, FR, GB, GR, IE, IT, LU, MC, NL, PT, SE, TR), OAPI patent (BF, BJ, CF, CG, CI, CM, GA, GN, GW, ML, MR, NE, SN, TD, TG).

**Published:**
— *Without international search report and to be republished upon receipt of that report.*

*For two-letter codes and other abbreviations, refer to the "Guidance Notes on Codes and Abbreviations" appearing at the beginning of each regular issue of the PCT Gazette.*

(54) Title: CATHETER WITH STYLET LUMEN

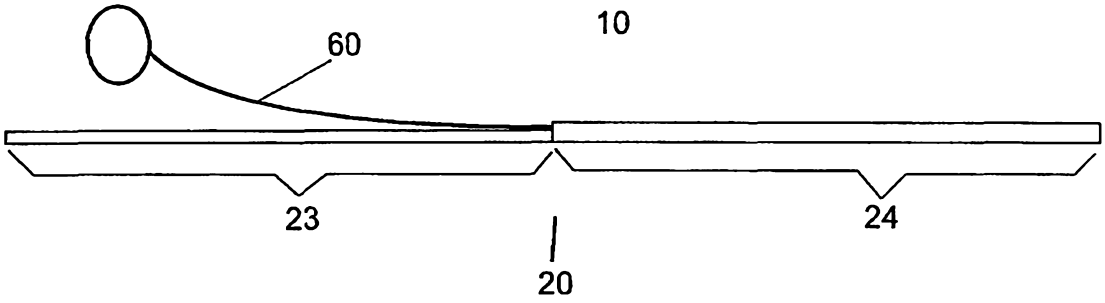


(57) Abstract: The present invention features a catheter suitable for drug delivery. The catheter comprises a catheter body comprising a proximal and a distal end, and defining a drug delivery lumen and a stylet lumen. The stylet lumen comprises a distal end configured to permit a stylet to abut the stylet lumen distal end, and a proximal aperture which is distal to the proximal end of the catheter, providing entry of the stylet into the side of the catheter. The stylet lumen is adapted for slidably receiving a stylet which can be used to guide the catheter to the intended site in the body of a subject and thus to facilitate implantation of the catheter.

WO 01/41858 A2

# CATHETER WITH STYLET LUMEN

## FIELD OF THE INVENTION

This invention relates generally to catheters for use in delivery of drug, and in particular to a catheter suitable for drug delivery and comprising a stylet lumen.

## BACKGROUND OF THE INVENTION

Delivery of drug to a specific treatment site represents a substantial challenge in the design of drug delivery systems. Site-specific drug delivery can be particularly challenging when the drug is to be delivered long-term (*e.g.*, several hours to several days, weeks, or months). One approach to accomplish site-specific drug delivery involves the use of a catheter, which can be positioned at a treatment site to facilitate localized delivery of drug from a drug reservoir that may be some distance from the treatment site. Long-term drug delivery requires that such catheters be biocompatible, drug non-reactive, impermeable, and flexible (*e.g.*, not sharp or easily breakable while implanted in the body).

The problem is further complicated where it is desirable to consistently deliver drug in relatively small amounts at very low volume rates, and thus requires a small drug delivery lumen. Catheters having a small inner lumen for drug delivery are often extremely difficult to handle due to, for example, their fragility and their small outer diameters. Adapting a catheter having a larger outer diameter to have a smaller inner lumen can provide a catheter that is relatively easy to handle, but too stiff or too thick for implantation through tortuous bends in the implantation pathway that leads to the treatment site.

Various approaches have been taken to placing a catheter in a desired location in the body in non-drug delivery contexts. Two commonly used types of dilatation catheters used in balloon angioplasty are referred to as "over-the-wire" catheters, and "non-over-the-wire" catheters. A non-over-the-wire catheter acts as its own guide wire, and thus there is no need for a separate guide wire lumen. An over-the-wire catheter is one in which a separate guide wire lumen is provided in the catheter. Placement of this type of catheter in the body is a two-step process. A guide wire is used to establish a path to, for example, a stenosis in a blood vessel. The catheter is then advanced over the guide wire until the distal end of the catheter reaches its destination. During advancement of the catheter over the guidewire, frictional forces build, which increase with increasing length of the guide wire lumen, thus hampering placement of the catheter. The so-called "monorail" catheter was developed as an approach to reduce these frictional forces and thus to facilitate implantation of the catheter. See, for example, U.S. Patent Nos. 4,762,129; and 5,350,395. In monorail-type catheters, a separate guidewire lumen is provided, which is substantially shorter than the overall length of the

catheter. A guidewire is introduced into a vessel of a subject, then the catheter is inserted over the guidewire, using the guidewire lumen. Because the guidewire lumen is shorter than the overall length of the catheter, the frictional forces as the catheter is moved over the guidewire are reduced compared with catheters in which the guidewire lumen run the length of the catheter. Since the guide wire lumen in these monorail catheters is open at both ends, there is still a requirement for a two-step process for catheter placement.

The aforementioned catheters were typically used for balloon angioplasty, and as such had relatively large outer diameters. The relatively large outer diameter of these catheters renders them unsuitable for implantation and drug delivery to sites in the body such as the spinal cord. Furthermore, a catheter design which requires a two-step process for implantation is also unsuitable for delivery of drugs, in part because introducing a guidewire into such locations carries with it the inherent risk of damaging tissue at the implantation site.

"Microbore" catheters have been developed for delivery of drugs to various sites in the body (see, e.g., U.S. Patent No. 5,820,610). Such catheters typically have a delivery lumen inner diameter of about 0.015 inch, and are thus adapted for delivery of volumes of formulation in the range of milliliters per day. However, there are many treatment situations which it is desirable to deliver a given drug to a relatively inaccessible site in the body over an extended period of time, for example, several hours, days, or weeks. In many of these situations, the drug is needed in only very low quantities and/or at a low volume rate over an extended time period. In these instances, the features of consistency, accuracy, and reliability of very low volume rate delivery which are indispensable for particular types of treatment are simply not met with existing microbore catheters. Furthermore, because of the small outer diameter, as well as the flexibility of the catheters, both desirable features for delivery to relatively inaccessible sites in the body, the catheters are difficult to implant, as they lack the required stiffness.

In general, catheters for use in drug delivery must meet the opposing demands of having sufficient stiffness so as to allow a user to implant the catheter to relatively inaccessible sites in the body, yet possessing sufficient flexibility to allow guidance through tortuous passageways, at the same time being capable of delivering microliter and submicroliter quantities of a drug formulation per day. There is thus a need in the field for a drug delivery catheter that is biocompatible, flexible, and suitable for delivery of drug at low volume rates, and readily implantable. The present invention addresses these problems, and provides related advantages as well.

## SUMMARY OF THE INVENTION

The present invention features a catheter suitable for drug delivery. The catheter comprises a catheter body comprising a proximal and a distal end, and defining a drug delivery lumen and a stylet

lumen. The stylet lumen comprises a distal end configured to permit a stylet to abut the stylet lumen distal end, and a proximal aperture which is distal to the proximal end of the catheter, providing entry of the stylet into the side of the catheter. The stylet lumen is adapted for slidably receiving a stylet which can be used to guide the catheter to the intended site in the body of a subject and thus to facilitate implantation of the catheter.

In some embodiments, the stylet lumen and the delivery lumen are juxtaposed. In some of these embodiments, the catheter body comprises two integral, juxtaposed elongate members which define the delivery lumen and the stylet lumen. In other of these embodiments, the catheter body comprises a single elongate member through which both delivery and stylet lumen extend. In other embodiments, the stylet lumen and the delivery lumen are coaxial.

In some embodiments, the stylet lumen distal end is at least partially closed or is completely closed. In other embodiments, the stylet lumen distal end has one or more openings, which openings are sized such that the stylet cannot pass through. Thus, the stylet is pushed against the stylet lumen distal end to position the catheter body within the subject. In those embodiments in which the stylet lumen distal end comprises one or more openings, fluid from an anatomical site in the body of the subject can be sampled through the stylet lumen.

In other aspects, the invention features a drug delivery system comprising a drug delivery device and a catheter of the invention and a method for delivery of drug using the catheter of the invention.

A primary object of the invention is to provide a catheter that can be readily handled, implanted, and cut to length, and that can be readily adapted for use in accurate, consistent, and reliable delivery of drug at a particularly low volume rate, *e.g.*, microliter or submicroliter quantities of a liquid or semisolid drug formulation per day.

Another object of the invention is to provide a catheter that is pre-attached to a drug delivery device, thus eliminating the need for a physician or other health care worker to effect the connection between the catheter and the delivery device. The catheter-delivery device assembly may be provided with a stylet positioned in the stylet lumen. The entire assembly may be provided as a sterile unit.

Another object of the invention is to provide a catheter that can be used with a variety of drug delivery systems to accomplish site-specific drug delivery.

It is another object of the invention to provide a catheter that is suitable for delivery of drug to a distal treatment site within a subject, particularly sites that are highly sensitive or fragile (*e.g.*, the spinal cord).

An advantage of the catheter of the present invention lies in the fact that a proximal section of the catheter comprises a delivery lumen (and not a stylet lumen), which proximal section extends proximally beyond the aperture which receives the stylet. This proximal section has a single lumen

and therefore can be cut to length and attached to a delivery device. This feature eliminates the possibility that the delivery device will be inadvertently attached to the wrong lumen (i.e., the stylet lumen), an error which might otherwise occur if the stylet and delivery lumen proximal ends were co-terminal.

Another advantage of the catheter of the present invention is that, since the stylet lumen is separate from the drug delivery lumen, the stylet lumen can be larger than the drug delivery lumen. Thus, the stylet lumen can accommodate a stylet which is of sufficient size so as to provide the stiffness necessary to guide the catheter to the site of treatment.

A further advantage of the catheter of the present invention is conferred by opening(s) in the stylet lumen distal end. This opening(s), when present, allows one to sample fluid from an anatomical site in the body of the subject. A fluid sample can provide diagnostic information, and can establish the location or placement of the distal end of the catheter.

Another important advantage of the invention is that the catheter can facilitate delivery of extremely small volumes of drug (*e.g.*, submicroliter volumes) and at low volume delivery rate, yet is easily handled, *e.g.*, by a clinician during implantation. This advantage of the catheter is provided by the combined characteristics of the delivery lumen, which provides the drug delivery conduit, and the stylet lumen, which provides for ease of guiding of the catheter to the intended site of delivery of formulation. Furthermore, by facilitating delivery of small volumes of drug to a specific treatment site, the catheter reduces the economic costs as well as the risks associated with systemic dosing.

Another important advantage is that the side exit of the stylet allows for pre-attachment of the catheter to a delivery device. A single- or multi-lumen catheter would not be pre-attached, as such an arrangement would not allow facile removal of the stylet, which is needed for implantation, but which must subsequently be removed.

The small outer diameter of the catheter body confers the advantage of allowing access through small bore needles during implantation or to sites in the body accessible only by fine passageways.

These and other objects, advantages and features of the present invention will become apparent to those skilled in the art upon reading this disclosure in combination with drawings wherein like numerals refer to like components throughout.

## BRIEF DESCRIPTION OF THE DRAWINGS

Figure 1 is a schematic drawing showing the general features of an exemplary catheter of the invention.

Figure 2 is a cut-away view of the portion of the catheter body comprising the stylet lumen proximal aperture, and shows the arrangement of the stylet lumen and delivery lumen. Figure 3 is a cut-away view of the distal end of the catheter body, and shows stylet lumen, delivery lumen, delivery lumen distal aperture, and stylet lumen closed distal end.

Figure 4 is a cross-sectional view of the portion of the catheter body comprising the stylet lumen proximal aperture, and shows the arrangement of stylet lumen proximal aperture, and delivery lumen.

Figure 5 is a cross-sectional view of the distal section of the catheter body, and shows stylet lumen, and delivery lumen.

Figure 6 shows the catheter body distal end, with delivery lumen distal aperture.

Figures 7A, 7B, 8A and 8B illustrate alternative exemplary embodiments of the stylet lumen proximal aperture. Figures 7A and 8A are cut away views; Figures 7B and 8B are perspective views.

Figures 9-13 illustrate an alternative exemplary embodiment of the catheter having integral, juxtaposed arrangement of stylet and delivery lumen.

Figures 14-17 illustrate an alternative exemplary embodiments of the catheter having coaxial arrangement of stylet and delivery lumen.

Figures 18-20 depict exemplary embodiments in which the stylet lumen distal end comprises one or more openings. Figure 18 is a cut-away view; Figures 19 and 20 are end views.

Figure 21 is a cut-away view of a delivery system of the invention comprising a catheter of the invention, and an attachment element, and attached for use with a drug delivery device.

Figure 22 illustrates an embodiment of the invention in which the catheter body is attached to a drug delivery device. In this example, a stylet is positioned within the stylet lumen.

Figures 23A and 23B illustrate an embodiment of the invention in which the catheter body is attached to the drug delivery device, and a connector further secures the catheter body to the delivery device. Figure 23A is a perspective view; Figure 23B is a cut-away view.

## DETAILED DESCRIPTION OF THE INVENTION

Before the present catheter, method of drug delivery, and specific devices and formulations used in connection with such are described, it is to be understood that this invention is not limited to the particular embodiments described, as such methods, devices, and formulations may, of course, vary. It is also to be understood that the terminology used herein is for the purpose of describing particular embodiments only, and is not intended to limit the scope of the present invention which will be limited only by the appended claims.

It must be noted that as used herein and in the appended claims, the singular forms "a," "an," and "the" include plural referents unless the context clearly dictates otherwise. Thus, for example, reference to "a catheter" includes one or more catheters, reference to "a formulation" includes mixtures of different formulations, and reference to "the method of delivery" includes reference to equivalent steps and methods known to those skilled in the art, and so forth.

Unless defined otherwise, all technical and scientific terms used herein have the same meaning as commonly understood by one of ordinary skill in the art to which this invention belongs. Although any methods and materials similar or equivalent to those described herein can be used in the practice or testing of the present invention, the preferred methods and materials are now described. All publications mentioned herein are incorporated herein by reference to disclose and describe the specific methods and/or materials in connection with which the publications are cited.

The publications discussed herein are provided solely for their disclosure prior to the filing date of the present application. Nothing herein is to be construed as an admission that the present invention is not entitled to antedate such publication by virtue of prior invention. Further, the dates of publication provided may be different from the actual publication dates which may need to be independently confirmed.

**Definitions**

"Drug delivery device" as used herein is meant to encompass any device that comprises a drug reservoir and that facilitates movement of drug from the drug reservoir to a site external to the drug delivery device. "Drug delivery device" thus encompasses controlled drug release devices, as well as devices that release drug in an unpatterned (*e.g.*, substantially unregulated) manner. Controlled drug release devices are particularly preferred for use with the catheter of the present invention.

"Controlled release" as used herein (*e.g.*, in the context of "controlled drug release") is meant to encompass release of substance (*e.g.*, a drug) at a selected or otherwise controllable rate, interval, and/or amount. "Controlled release" thus encompasses, but is not necessarily limited to, substantially continuous delivery, patterned delivery (*e.g.*, intermittent delivery over a period of time that is interrupted by regular or irregular time intervals), and delivery of a bolus of a selected substance (*e.g.*, as a pre-determined, discrete amount of a substance over a relatively short period of time (*e.g.*, a few seconds or minutes).

The term "controlled drug release device" is meant to encompass any device that provides for controlled release of a drug or other desired substance, and that can be adapted for use with a catheter of the invention, *e.g.*, a drug delivery device that provides for controlled release of drug through a catheter of the invention, and at a rate that is suitable to

accomplish delivery of a therapeutically effective amount of drug to a treatment site according to the methods of the invention.

The term "low volume rate drug delivery" as used herein generally refers to delivery of a liquid or semisolid drug at a volume rate of from about 0.01 μl/day to about 200 μl/day, usually about 0.04 μl/day to about 20 μl/day, more usually about 0.1 μl/day to about 8.0 μl/day.

The term "treatment site" as used herein is meant to refer to a desired site for delivery of drug from a drug delivery device of the invention, and/or a site from which fluid sampling is desired, *e.g.*, for diagnosis and/or prognosis. "Treatment site" is thus meant to include, although is not necessarily limited to, a subcutaneous, percutaneous, intravenous, intrathecal, intramuscular, intra-arterial, intravascular, intraperitoneal, intraspinal, epidural, intracranial, peritumoral, or intratumoral (*i.e.*, within a cancerous growth) site within a subject, as well as
sites within or near a selected organ or tissue (*e.g.*, central nervous system (*e.g.*, spinal fluid, brain, *etc.*), peripheral nervous system, kidney, liver, pancreas, heart (*e.g.*, intrapericardial), lung, eye, ear (*e.g.*, inner ear), lymph nodes, breast, prostate, ovaries, testicles, thyroid, spleen, *etc.*), digestive system (*e.g.*, stomach, gastrointestinal tract, *etc.*), skeletal muscle, bone, urinary bladder, gall bladder, adrenal gland, adipose tissue, parathyroid gland, uterus, fallopian tube, skin, into a vessel associated with the circulatory system (*e.g.*, artery, arteriole, blood vessel, vein, capillary bed, lymph vessel, particularly arteries that feed a selected organ or tissue)), a tumorous growth (*e.g.*, cancerous tumor (*e.g.*, solid tumor), cyst, *etc.*), at a site associated with a microbial infection (*e.g.*, bacterial, viral, parasitic or fungal infection), or to an autologous or synthetic graft (*e.g.*, a vascular graft).

The term "access site" or "implantation site" is used to refer to a site on or in a subject at which a catheter of the invention is introduced for implantation and positioning within the subject's body, *e.g.*, for delivery of drug to a desired treatment site. For example, where a catheter is implanted in a subject for delivery of drug to the spinal cord, the access site or implantation site can be a subcutaneous site at which a proximal end of the catheter is substantially retained, and the treatment site is a position within or adjacent the spinal cord (treatment site) at which a distal end of the catheter is positioned for delivery of drug.

"Drug delivery system" as used herein is meant to refer to a combination of a catheter of the invention and a drug delivery device suitable for use in delivery of a drug to a treatment site, preferably a controlled drug release device.

The term "subject" is meant any subject, generally a mammal (*e.g.*, human, canine, feline, equine, bovine, *etc.*), to which drug delivery is desired.

The term "impermeable" means that the material is sufficiently impermeable to environmental fluids as well as ingredients contained within the dispensing device such that the migration of such materials into or out of the device through the impermeable device is so low as to have substantially no

adverse impact on the activity or function of the drug retained within the device during the delivery period.

The terms "drug formulation", "formulation" and "drug", used interchangeably herein, are meant to encompass any substance suitable for delivery to a treatment site of a subject, which substances can include pharmaceutically active drugs, as well as biocompatible substances that do not exhibit a pharmaceutical activity in and of themselves, but that provide for a desired effect at a treatment site, *e.g.*, to flush or irrigate a treatment site (*e.g.*, saline).

The term "proximal end" (or "first end") is used herein in connection with components and/or structures which are closer to a clinician or other individual who is using the catheter and/or devices of the invention in a medical treatment setting. Conversely, the term "distal end" (or "second end") is used herein in connection with components and/or structures which are closer to the treatment site or sampling site within the body of the subject being treated.

**Overview of the Invention**

The catheter of the present invention comprises a catheter body which defines a delivery lumen which generally extends the length of the catheter body, from at or near the catheter body proximal end to at or near the catheter body distal end. The catheter of this invention further defines a stylet lumen. The delivery lumen and the stylet lumen are generally separated from one another by an impermeable material, e.g., the stylet lumen and delivery lumen are not in fluid communication. While the delivery lumen extends from at or near a proximal end to at or near a distal end of the catheter body, the stylet lumen has a proximal aperture distal to the catheter body proximal end. The relative position of the stylet proximal aperture provides a side entry for inserting a stylet into the catheter. The invention is also advantageous in that the catheter body comprises a proximal section or region that defines a delivery lumen, but not a stylet lumen. This feature of the stylet lumen provides an important advantage by allowing the proximal extension to be cut to any desired length without interfering with the stylet lumen.

Another salient feature of the stylet lumen defined by the catheter body is its distal end, which is configured to permit a stylet to abut the stylet lumen distal end, i.e., the stylet cannot pass through the stylet lumen distal end. This feature confers a further advantage in that the stylet lumen is adapted to slidably receive a stylet, which is used to push the catheter to a site of treatment in the body. The stylet provides the stiffness necessary to guide the catheter to the site of treatment without the need for introduction of a guidewire prior to insertion of the catheter. Thus, the risk of tissue damage by the stylet is effectively reduced or eliminated. The distal end of the stylet lumen is sufficiently close to the catheter body end so that control over the direction of the catheter body distal end is maintained. The

stylet lumen distal end may be closed, or may have one or more openings. When the stylet lumen distal end comprises one or more openings, the opening(s) allow sampling of fluid from an anatomical site in the body of the subject. A fluid sample can be further analyzed for diagnostic purposes, and can also provide information as to the location of the distal end of the catheter within the body. As an example, when the catheter is to be used for delivery to an intrathecal site, a fluid sample which comprises cerebrospinal fluid is an indication that intrathecal implantation has been achieved.

In one embodiment of the catheter of the present invention, the stylet lumen has a larger inner diameter than the delivery lumen, e.g., the delivery lumen diameter is on the order of hundredths to thousandths of an inch. In this embodiment, fluid sampling through the stylet lumen would be more practical than through the delivery lumen.

The catheter body is made of a highly flexible, biocompatible material. After placement of the catheter in the body, the stylet is generally removed, thus effectively removing the stiffness conferred by the stylet, so that the feature of catheter body flexibility is restored. The flexibility feature is important in a catheter which is maintained in the body over extended periods of time, since damage to the tissues surrounding the implanted catheter upon movement by the subject into which the catheter is implanted is reduced or eliminated.

While the catheter of the invention is primarily intended for use in drug delivery, it may also be used in the course of other medical procedures, including, *e.g.*, to facilitate sampling of fluid (*e.g.*, spinal fluid) from the treatment site, *etc.*; delivery of energy, such as in an ablation treatment; in imaging methods, e.g., delivery of ultrasound energy; or a microendoscopic or angioscopic-type device.

The catheter body, stylet lumen, delivery lumen, and various exemplary embodiments of the catheter will now be described in more detail.

## CATHETER BODY MATERIALS AND GENERAL CHARACTERISTICS

The catheter body is generally a flexible elongate structure comprising a proximal end, a distal end, and an outer surface. The catheter body can be any suitable shape including, but not limited to, tubular, elliptical, cylindrical, etc., and may be either smooth on the catheter outer surface, or may comprise ridges (*e.g.*, longitudinal, axial, or circumferential) or other surface variations as will be desirable for the specific applications for which the catheter is used.

### Dimensions

In general, the dimensions of the catheter (*e.g.*, overall length, outer diameter, inner diameter, wall thickness, *etc.*) can be varied as required or desired, and will vary according to a variety of

factors (*e.g.*, the treatment site for delivery, the drug delivery device used in connection with the catheter, *etc.*). For example, the inner diameter of the drug delivery lumen of catheter can be equal to, or can be greater or less than, the diameter of an orifice from which drug flows from a drug reservoir of a drug delivery device that is to be used with the catheter. In one embodiment, the delivery lumen of the catheter can comprise an inner diameter that is equal to or greater than the diameter of the orifice of a drug release device to be used with the catheter, and then taper over its length to a relatively smaller inner diameter, *e.g.*, to provide a drug delivery outlet at the distal end. In general, the inner and outer diameters of at least the proximal end of the catheter is preferably of a size sufficient to provide a leak-resistant or leak-proof drug flow path from a drug reservoir of the drug delivery device through the catheter drug delivery conduit.

In general, the catheter may have an overall length in the range from about 0.4 inch to about 80 inches, e.g., from about 2 inches to about 60 inches, e.g., from about 4 inches to about 40 inches, e.g., from about 6 inches to about 30 inches.

In general, the catheter of the invention can be described as comprising a proximal section and a distal section. In its distal section, the catheter body defines a delivery lumen and a stylet lumen. In its proximal section, the catheter body does not define a stylet lumen, but defines a delivery lumen which is continuous with the delivery lumen defined by the catheter body in its distal section. Thus, the proximal section can be cut to length without disturbing the stylet lumen.

The catheter body proximal section (the section of the catheter having a delivery lumen but no stylet lumen) can be of any desired length. For example, the length of the distance between the stylet proximal aperture and the proximal end of the catheter body can be from about 0.40 inches to about 4 inches or more.

The catheter body outer diameter can be substantially the same throughout its length, or can be varied (e.g., tapered, greater over the distal section than the proximal section, etc.). In one exemplary embodiment, the outer diameter of the catheter body changes abruptly at the stylet aperture such that the section of the catheter body which defines the delivery lumen and not the stylet lumen (i.e., the proximal section) has a smaller outer diameter than the section of the catheter body which defines both a delivery lumen and a stylet lumen. Alternatively, the proximal and distal ends can have substantially the same outer diameter.

In exemplary, non-limiting embodiments, the outer diameter of the distal section of the catheter body (the section comprising both delivery lumen and a stylet lumen) is generally from about 0.01" (0.01 inch) to about 0.100", e.g., from about 0.015" to about 0.080", e.g., from about 0.020" to about 0.070", or from about 0.030" to about 0.060". In one embodiment, the catheter body distal section outer diameter is from about 0.040" to about 0.050". The outer diameter of the proximal section of the catheter body is usually from about 0.01 inch to about 0.100 inch.

Delivery lumen inner diameter

The portion of the drug delivery conduit defined by the delivery lumen is of an inner diameter compatible with the desired delivery characteristics for the drug. For example, in some embodiments, the delivery lumen inner diameter is compatible for delivery at a relatively low volume rate, e.g., as low as about 0.01/μl/day. As with the catheter outer diameter, the delivery lumen inner diameter can be substantially the same throughout the entire length of the catheter, or can vary along the catheter's length. For example, the drug delivery conduit catheter can be tapered or narrowed at any point along the catheter body, *e.g.*, tapered at a distal end, or can be widened at any point along the catheter body, *e.g.*, widened over a distal portion of the catheter.

In exemplary, non-limiting embodiments, the inner diameter of the catheter body defining the delivery lumen can be from about 0.0002" to about 0.025", from about 0.0005" to about 0.015", from about 0.001" to about 0.0125", or from about 0.002" to about 0.010".

In one preferred embodiment, the lumen comprises a nickel titanium alloy. The inner diameter of the delivery lumen is about 0.003" to 0.006", and the outer diameter of the distal section of the catheter is about 0.005" to about 0.012".

Stylet lumen

Generally, the stylet lumen is adapted to slidably receive the stylet, which is then removed once the catheter has been placed at the desired site in the body. Where the stylet is removed from the catheter, it may be preferable to enhance the slideability of the surfaces of the stylet, stylet lumen inner wall, *e.g.*, by Teflon or parylene coating of the stylet, *etc.*

In general, the inner diameter of the stylet lumen can be of a desirable size, e.g., from about 0.0070 inch to about 0.030 inch, e.g., from about 0.0075 inch to about 0.025 inch, or from about 0.010 inch to about 0.020 inch.

The distance between the stylet distal end and the distal end of the catheter body can vary, depending on the implantation site and treatment site of catheter placement contemplated, on the application, and on the relative stiffness of the distal section of the catheter body desired during implantation. In general, this distance is less than about 8 inches, e.g., less than about 4 inches, e.g., less than about 2 inches, and generally between 0.004 inch and 4 inches, e.g., between about 0.04 inch and about 0.8 inch.

The stylet lumen is configured such that the stylet abuts the stylet lumen distal end, i.e., the stylet cannot pass through the stylet lumen distal end. In some embodiments, the stylet lumen distal end is closed.

In other embodiments, the stylet lumen distal end has one or more openings, as long as the stylet cannot pass through the stylet lumen distal end. Stylet lumen distal end opening(s) are referred to herein as "stylet lumen distal aperture(s)" or "sampling aperture(s)." In these embodiments, the opening(s) is dimensioned such that the stylet cannot pass through. A sampling aperture may have a diameter from about 5% to about 95%, e.g., from about 10% to about 80%, from about 25% to about 75%, the diameter of the stylet. Thus, for example, if the stylet has a diameter of about 0.006 ", an opening in the stylet lumen distal end may be about 0.005" or less. However, the opening(s) is large enough to permit fluid sampling, e.g. to allow any fluid present at a given anatomical site to pass through upon application of negative pressure, at or near the stylet lumen proximal aperture. In some of these embodiments, sampling apertures are provided by a porous area, such as a mesh, a filter, or a porous membrane.

The proximal end of the stylet lumen comprises an opening, the "stylet lumen proximal aperture", which is adapted to receive a stylet. Once the catheter body has been implanted, it is generally desirable to remove the stylet. To prevent infection after implantation, the stylet lumen may be filled with a sterile material, may be filled with a material containing an anti-microbial agent, and/or can be sealed off. The stylet lumen proximal aperture can be configured such that, upon removal of the stylet, the stylet lumen is sealed off from the environment (e.g., the atmosphere or the body). The stylet lumen aperture may comprise a self-sealing element, e.g., a diaphragm, an iris-type closure, or a septum.

The stylet lumen proximal aperture can also be configured to receive a locking device or a connector, e.g., to secure a drug reservoir onto the catheter body. Any of a number of known connectors are suitable for this purpose.

Catheter body materials

The catheter body comprises a biocompatible material, more preferably an implantable grade biocompatible material. The material of the catheter body that defines the drug delivery conduit is preferably substantially drug-impermeable and comprises a material(s) that does not react in an unintended manner with the active agent formulation. The catheter body can be made of a single material, or can comprise two or more materials layered upon one another.

Exemplary materials include, but are not necessarily limited to, biocompatible polymers, elastomers, metals, metal alloys, glasses, laminates of hydrophilic polymers and hydrophobic polymers, multilaminates or polymer, metals, and/or glasses; and the like.

Exemplary biocompatible polymeric materials include, but are not necessarily limited to, homopolymers and copolymers of vinyl acetate (*e.g.*, ethylene vinyl acetate copolymer); homopolymers and copolymers of acrylates (*e.g.*, poly(methyl) methacrylate (PMMA), polyethylmethacrylate,

ethylene glycol dimethacrylate, ethylene dimethacrylate and hydroxymethyl methacrylate); polyurethanes; polyethylenes; polyvinylchlorides; polycarbonates; polyamides; polysulfones; polyesters; polyimides; halogenated polymers (*e.g.*, polytetrafluoroethylene (PTFE), polyvinyl fluoride, polychlorotrifluoroethylene, copolymers tetrafluoroethylene and hexafluoropropylene; PFA, and the like); polyolefins (*e.g.*, high density polyethylene (HDPE), low density polyethylene (LDPE), linear low density polyethylene (LLDPE), polypropylenes, and the like); polystyrenes; nylons; urethanes; homopolymers and copolymers of acrylonitrile (*e.g.*, acrylonitrile-butadiene-styrene polymer, styrene acrylonitrile, polycarbonate-acrylonitrile-butadiene-styrene; and the like); polyvinylpyrrolidone; 2-pyrrolidone; polyacrylonitrile butadiene; cellulose acetate; polyethylene terephtholate; polymethylpentene; polyisobutylene; polymethylstyrene; polyvinylidine chloride and homopolymers and copolymers of polyvinylidine chloride (*e.g.*, polyvinylchloride-acrylic copolymers); PEBAX™; HYTREL™; and other similar compounds known to those skilled in the art. Further exemplary polymers are described in Plastics Materials 6th ed., May 1995, J.A. Brydson, Butterworth-Heinemann, publishers.

Suitable, biocompatible elastomers include, but are not necessarily limited to, biocompatible elastomers such as medical grade synthetic (*e.g.*, silicone) rubbers; polyvinyl chloride elastomers; polyolefins; homopolymeric and copolymeric elastomers; urethane-based elastomers; natural rubbers; and fluorinated polymers (*e.g.*, PTFE), and the like.

Metallic materials suitable for the catheter body comprise stainless steel, titanium, platinum, tantalum, gold and their alloys; gold-plated ferrous alloys; platinum-plated titanium, stainless steel, tantalum, gold and their alloys as well as other ferrous alloys; cobalt-chromium alloys; titanium nitride-coated stainless steel, titanium, platinum, tantalum, gold, and their alloys; TEFLON™; nickel titanium; and superelastic nickel titanium.

In one embodiment, the catheter body comprises nickel titanium, particularly superelastic nickel titanium (NITINOL™). In another embodiment, the catheter body comprises a silicone or a polyurethane elastomer.

The catheter body can comprise additional materials or agents. For example, the catheter can comprise a coating on an internal wall of the delivery lumen to facilitate transport of drug through the delivery lumen, or to impart other desirable characteristics to the catheter. The catheter lumen can also comprise coatings that reduce the risk of infection, *e.g.*, a silver coating, a coating or treatment with an antimicrobial agent(s), etc. The outer wall of the catheter body can comprise a coating or be treated to facilitate implantation of the catheter within the subject, to reduce the risk of infection, and/or to impart other desirable characteristics to the catheter.

Stylet

The catheter of the present invention is positioned in the body by use of a stylet which abuts the distal end of the stylet lumen, thus effectively allowing one to push the catheter through the body. The stylet facilitates pushing of the catheter to an implantation site. The characteristic(s) conferred on the catheter by the stylet can be varied by, for example, varying the materials from which the stylet is made, varying the structure of the stylet (*e.g.*, a coil-like structure, a rod-like structure, other structure that provides compression strength), and varying the thickness of the stylet.

The stylet can be provided in a variety of configurations (*e.g.*, geometrical shapes, *e.g.*, substantially straight or in a pre-set shape to give all or a portion of the catheter a desired configuration to facilitate access to a specific region) and a variety of dimensions (*e.g.*, length, diameter, *etc.*) as suitable to provide the desired compression strength.

The stylet diameter can be substantially the same throughout its length, or may vary, *e.g.*, the stylet diameter can be greater over those portions of the catheter where increased relative stiffness is desired and less over those portions of the catheter where increased relative flexibility is desired. The dimensions and/or configuration of the stylet can be varied with the dimensions of the stylet lumen. In some embodiments it may be desirable to use a stylet having a combination of structural configurations.

Materials for the stylet can be selected according to the desired design, *e.g.*, to provide for compression strength. Exemplary materials for use in the stylet include, but are not necessarily limited to, metals (*e.g.*, stainless steel wire, parylene-coated or Teflon-coated stainless steel), metal alloys), polymers (*e.g.*, particularly polymers of relatively high flex modulus, *e.g.*, carbon fiber,) and the like. An example of a compression stylet is a wire-like element, preferably teflon-coated stainless steel, having a diameter within the range of from about 0.006" to about 0.030".

The invention will now be described in further detail and with reference to the drawings. The embodiments described below or in the figures are only exemplary and are not meant to be limiting in any way.

## EXEMPLARY SPECIFIC EMBODIMENTS OF THE CATHETER OF THE INVENTION

Referring generally to one non-limiting embodiment of the catheter of the invention illustrated in Figure 1, the catheter **10** of the invention comprises a catheter body **20** which comprises a proximal section **23** and a distal section **24**. The distal section defines both delivery and stylet lumen. The proximal section defines a delivery lumen, which is continuous with the delivery lumen of the distal section. A stylet **60** enters the stylet lumen at the stylet lumen proximal aperture.

Figure 2 shows a cut-away view of the portion of the catheter body **20** comprising the stylet lumen aperture **73**. In this cut-away view, the stylet lumen proximal aperture **73** is adapted to slidably receive a stylet, which enters the stylet lumen **70**. The delivery lumen **50** is shown juxtaposed to the stylet lumen **70**. Figure 3 is a cut-away view of the distal end of the catheter body **20**, and shows the delivery lumen **50**, the delivery lumen outlet **54** defined at a distal end **22** of the catheter body, the stylet lumen **70**, and the stylet lumen distal end **72**. Figure 4 is a cross-sectional view of the catheter body at a point just proximal of the stylet lumen proximal aperture **73** (i.e., at the junction of the proximal and distal sections of the catheter), and shows the arrangement of the delivery lumen **50** relative to the stylet lumen proximal aperture **73**. Figure 5 is a cross-sectional view of the distal portion **24** of the catheter body **20**, and shows the arrangement of the delivery lumen **50** relative to the stylet lumen **70**. Figure 6 depicts the distal end **22** of the catheter body **20**, and shows the delivery lumen distal aperture **54**. In the exemplary embodiment shown in Figure 6, the stylet lumen distal end is closed.

Outer diameter of catheter body at the junction between the proximal and distal sections

While the outer diameter of the catheter body can change abruptly at the stylet lumen aperture, as described above, the outer diameter could also be substantially uniform over, for example, the junction between the proximal and distal sections. An exemplary variation is shown in Figures 7A (cut-away view) and 7B (perspective view), which illustrate catheter body **20** having an outer diameter which is substantially uniform between the catheter body proximal section **23** and the catheter body distal section **24**. The stylet lumen **70** curves toward the catheter body outer surface, such that the stylet lumen aperture **73** is an opening in the sidewall of the catheter body, as shown in Figure 7B. Alternatively, as shown in Figures 8A (cut-away view) and 8B (perspective view), a guidance groove **120**, which serves to guide the stylet into the stylet lumen **70**, is provided in the outer surface of the catheter body **20**.

In these embodiments, the easy cut-to-length feature can be retained, provided the proximal portion of the catheter body is cut at a site proximal to the stylet aperture, or, alternatively, the guidance groove.

First and second elongate members, integral and juxtaposed

In one exemplary variation of the catheter body of the invention, as shown in Figures 9-13, the catheter body **20** comprises a first elongate member **30** defining the delivery lumen **50**. The catheter body further comprises a second elongate member **40** which is juxtaposed to and integral with the first elongate member and which defines the stylet lumen **70**. The first elongate member is substantially

longer than the second elongate member. The first and second elongate members may be made of the same or of different materials. Figure 10 shows a cut-away view of this exemplary variation and shows the arrangement of the delivery lumen **50** relative to the stylet lumen **70**. Figure 11 is a cross-sectional view of the portion of the catheter body comprising the stylet aperture **73** and delivery lumen **50**. Figure 12 is a cross-sectional view of the distal portion of the catheter body of this variation, comprising both delivery lumen **50** and stylet lumen **70**.

In a further variation, the second elongate member **40** can comprise a proximal extension **45** which is not integral with the first elongate member **30**, as shown in Figure 13.

Coaxial stylet and delivery lumen

The stylet lumen and the delivery lumen can be coaxial, i.e., the catheter body can comprise an elongate first member and an outer member which are coaxial and which define the delivery and stylet lumen, respectively. In these embodiments, the catheter body comprises a first elongate member **30** defining a delivery lumen **50**, and a second elongate member **40** defining, together with the first elongate member, a stylet lumen **70**. Various aspects of this variation is shown in Figures 14-16. Figure 14 shows the proximal section **23** and the distal section **24** of the catheter body **20**. Figure 15 is a cut-away view illustrating how the stylet lumen **70** is defined by the first **30** and second **40** elongate members of the catheter body **20**, and the delivery lumen **50** is defined by the first elongate member **30** of the catheter body. The first elongate member is substantially longer than the outer member, and defines a delivery lumen extending from the catheter body proximal end **21** to the catheter body distal end **22**. The second elongate member defines a stylet lumen **70** opening into a stylet lumen proximal aperture **73** which is distal to the catheter body proximal end, and wherein the second elongate member defines a stylet lumen terminating at a distal end **72**. As shown in Figure 16, the first elongate member **30** is substantially completely enclosed within the second elongate member **40** along the length of the second elongate member. In this embodiment, the first elongate member **30** and second elongate member **40** are fused to one another for a short distance near the stylet lumen proximal aperture **73**. As shown in Figure 17, the stylet lumen **70** is defined by the outer wall **36** of the first elongate member **30** and the inner wall **44** of the second elongate member **40** of the catheter body **20**, and the delivery lumen **50** is defined by the inner wall **37** of the first elongate member **30** of the catheter body. The first **30** and second **40** elongate members can be made from the same materials or from different materials.

The second elongate member **40** and first elongate member(s) **30** can be associated in a variety of ways to provide the catheter **10** of the invention. For example, the inner and outer members may be joined by connecting walls (not shown) at or near the stylet lumen proximal aperture **73** and/or at a

distal end **22** of the catheter body **20**. Alternatively or in addition, the first and second elongate members can be joined together at their ends by crimping, heat fusion, ultrasonic welding, radiofrequency welding, heat bonding, solvent bonding, soldering, *etc.* The first and second elongate members can be joined by a mechanical element, such as a press fit or locking element. Alternatively or in addition, the first and second elongate members can be connected by an adhesive material, which may be placed within a space between the first and second elongate members, minimally at the extreme proximal and distal ends of the first elongate member so as to hold the first elongate member in place within the second elongate member. Suitable adhesives include, but are not necessarily limited to, epoxy resins, ethylene vinyl acetate-based adhesives, polyurethane, cyanoacrylates, UV curable adhesives, RTV silicone adhesives, as well as other silicone-based adhesives, solvent bonding adhesive substances, polyisobutylene (PIB)-based adhesives, and the like. Additional suitable adhesives are well known in the art, see, *e.g.*, Handbook of Adhesive Technology, A. Pizzi and K.L. Mittal, Jan. 1994, Marcel Dekker, publisher.

Stylet lumen distal end aperture(s)

Figures 18-20 depict exemplary embodiments in which the stylet lumen distal end comprises one or more openings. Figure 18 is a cut-away view of the distal end **22** of the catheter body, showing the delivery lumen distal aperture **54**, and the stylet lumen **70** with stylet **60** positioned in stylet lumen and abutting stylet lumen distal end **72**. The stylet lumen distal end **72** is defined in part by an inner surface of the catheter body and provides a surface against which force can be exerted via a stylet to push the catheter into place. Figure 19 is an end view of an exemplary embodiment in which stylet lumen distal end has one opening **74**. Figure 20 is an end view of an exemplary embodiment in which stylet lumen distal end has a plurality of openings **74**. Openings **74** are dimensioned to be smaller than diameter of stylet.

ATTACHMENT ELEMENTS

The catheter of the invention can be modified to be permanently fixed to a drug delivery device (*e.g.*, the catheter can be an extension of a drug delivery device component (*e.g.*, outer sheath of a drug delivery device) or can be attached by welding, adhesive bonding, etc.). Alternatively, the catheter of the invention can comprise an attachment element **85** for attaching the catheter to a drug delivery device (see, *e.g.*, Figure 21). The attachment element **85** facilitates and maintains a connection between a drug delivery device and a catheter of the invention, and thus maintains a drug flow pathway from a drug reservoir of a delivery device to a treatment site, during use in drug delivery to a treatment site. Such an attachment element may provide for permanent or reversible attachment of the drug

delivery device to the catheter, and preferably provides for a leak-proof seal between the catheter and the drug delivery device.

Any of a variety of attachment elements are compatible for use in the drug delivery system of the invention. The attachment element can be provided as a portion of or component associated with the catheter proximal end, the drug delivery device distal end, or a combination of both. The attachment element can be fashioned from or attached to a proximal section of the catheter body, which proximal portion defines a proximal portion of the delivery lumen. For example, the attachment element can be a press fit lock fashioned from or attached to a portion of such the catheter proximal extension. In another example, the attachment element is a combination of a threaded connector elements, luer lock elements, bayonet connectors, *etc.* Alternatively, the attachment element can be provided by a catheter receiving element positioned at the distal end of the drug delivery device, *e.g.*, the proximal end of the catheter can permanently or removably inserted into the body of the drug delivery device. In this latter embodiment, the proximal end of the catheter may not require any additional elements to accomplish attachment to the drug delivery device.

FURTHER VARIATIONS

The catheter may comprise a single drug outlet at or near the distal end for delivery of drug at or near a treatment site, or may comprise a plurality of such drug outlets (e.g., in the form of side holes along a portion of the distal end of the catheter that communicate with a drug delivery conduit defined by the inner diameter of the inner member, the outer member, or both). The catheter may comprise a single drug delivery conduit (*e.g.*, defined by a single inner member), or may comprise a plurality of drug delivery conduits (*e.g.*, defined by one or more inner members positioned within a single outer member).

The catheter of the invention can be further modified by providing a radiopaque marker at one or more locations along its length, or by impregnating or coating all or a portion of the catheter body with appropriate radiopaque dyes or other radiopaque materials. Suitable radiopaque markers can comprise metal rings (*e.g.*, platinum, palladium, gold, *etc.*) The provision of radiopaque markers is well known in the art.

In other variations contemplated by the invention, the distal end of the catheter is shaped so as to allow for smooth passage through such tortuous bends. For example, the distal end of the catheter can be provided as a rounded tip that allows for the catheter to move smoothly around such bends (*e.g.*, where a square-ended catheter tip might catch on the sidewalls of a vessel or duct, thus frustrating implantation or placing the subject at risk of injury). In other variations, the distal end of the catheter optionally ends in a one-way valve such as a duck bill valve to prevent retrograde flow into the catheter delivery lumen, with external pressure at that distal end. Alternatively or in addition,

the distal end may comprise a porous plug that serves as a filter element preventing particulate matter (including bacteria) from exiting from the catheter and into the treatment site.

The catheter can also be provided as a multi-lumen catheter, *e.g.*, a catheter comprising a plurality of delivery lumen and/or a plurality of stylet lumen. The catheter can also comprise a distal extension, which is positioned adjacent the distal end of the catheter body. For example, the distal extension can be floppy (*i.e.*, flexible, *e.g.*, has a low flexural modulus relative to the flexural modulus of the body of the catheter which defines both the stylet lumen and delivery lumen). The flexibility of the floppy distal extension facilitates the catheter's negotiation of curves and tortuous bends (*e.g.*, in vessels, ducts, or arteries) during implantation, and further reduces the risk of damage to the surrounding tissue. The catheter distal extension can be of any desired length, generally from about 0.4 inch to about 8 inches, usually from about 0.8 inch to about 4 inches.

## DRUG DELIVERY DEVICES SUITABLE FOR USE WITH THE CATHETER OF THE INVENTION

The catheter of the invention can be provided in connection with a drug delivery device to provide a drug delivery system. In this embodiment, it may be desirable to include a component that facilitates attachment of the catheter to the drug delivery device and/or stabilize such attachment, e.g., substantially diminish movement of the catheter in a direction perpendicular to the longitudinal axis of the drug delivery device (e.g., to provide strain relief), so as to reduce risk of breakage of the catheter at the attachment site.

As exemplified in Figure 21, the drug delivery device **80**, having a proximal end **82** and a distal end **83**, which distal end defines a drug delivery orifice **84**. The drug delivery orifice provides a drug flow pathway from a drug reservoir (not shown) within the drug delivery device, and may be provided as a distinct opening or as a series of openings, *e.g.*, as in the context of a rate-limiting membrane, which membrane defines a plurality of openings through which drug may flow from the drug reservoir. The distal end **83** of the drug delivery device is attached to catheter body proximal section **23** comprising delivery lumen **50** to provide a flow pathway from a drug delivery device reservoir in the drug delivery device **80** through the drug delivery device orifice **84** and into the drug delivery lumen **50** of the catheter body **20** of catheter **10**. The catheter body proximal section **23** thus communicates with the drug delivery device in a manner that facilitates movement of drug from the drug

delivery device **80**, through the catheter body **20**, and out the drug delivery outlet **54** of the catheter body **20**.

As exemplified in Figure 22, a catheter of the present invention can be provided to a user pre-attached to a delivery device. The catheter body **20** is shown attached to a delivery device **80** at the

proximal end **21** of the catheter body, with a stylet **60** positioned in the stylet lumen. The entire assembly or component thereof, e.g., catheter, stylet, and delivery device, can be provided as a sterile unit, in a sterile package (not shown).

A delivery system of the invention may further comprise a mechanical connector **130**, which facilitates attachment of the catheter to the drug delivery device. At least a portion of the mechanical connector **130** is adapted for attachment to (e.g., insertion into), or stable positioning into, stylet lumen proximal aperture **73**. Another portion of the connector is adapted for connecting (detachably or fixedly) to delivery device **80**. The mechanical connector serves to facilitate and/or stabilize the connection between the catheter and the delivery device, and may further serve to seal the stylet lumen.

As exemplified in Figures 23A (perspective view) and 23B (cut-away view), mechanical connector **130** has a distal end **132** which can be detachably attached to (e.g., inserted into) proximal sylet lumen aperture **73** once catheter body **20** is in position in the body of the subject, and after stylet is withdrawn. In this exemplary embodiment, connector **130** has a proximal end **131** which is attached to delivery device **80**, thereby locking catheter body onto delivery device. Mechanical connector **130** can be of any type, e.g., it may have a plurality of barbs on its surface which engage stylet lumen inner surface; it may be configured such that it expands once inserted into stylet lumen, thereby locking into place; it may have threads that screw into stylet lumen which may be conversely threaded to accept connector. Insertion of a connector can also serve as a mechanical barrier to limit or prevent introduction of unwanted materials, e.g., microorganisms, into the stylet lumen. A connector can also serve to limit possible leakage of fluid from the body of the subject and out through the stylet lumen proximal aperture.

Drug delivery devices suitable for use in conjunction with the catheters of the invention may be based on any of a variety of drug delivery systems. For example, the drug delivery device can be based upon a diffusion-based delivery system, *e.g.*, erosion-based delivery systems (*e.g.*, polymer-impregnated with drug placed within a drug-impermeable reservoir in communication with the drug delivery conduit of the catheter of the invention), electrodiffusion systems, and the like. In other embodiments, the controlled drug release device is based upon a convective drug delivery system, *e.g.*, systems based upon electroosmosis, vapor pressure pumps, electrolytic pumps, effervescent pumps, piezoelectric pumps, osmotic pumps, *etc.*

In one embodiment, the drug delivery device comprises an osmotic pump, such as an osmotic pump similar to that described in U.S. Pat. No. 5,728,396. In one embodiment, the osmotic pump is a DUROS™ osmotic pump.

Although controlled release of drug is described above as being primarily attributed to characteristics of the drug delivery device, other aspects, features, or embodiments of the invention can facilitate controlled release of drug, and are within the scope of and contemplated by the present invention. For example, characteristics of the catheter (*e.g.*, dimensions of the drug delivery conduit, particularly the inner diameter of the delivery lumen) can facilitate or further facilitate controlled release of drug from a drug reservoir to the treatment site. In another example, the catheter can be loaded with polymer that provides for controlled diffusion of drug from a drug reservoir.

Any of a wide variety of drugs can be delivered using the drug delivery system of the invention. Drugs suitable for delivery are preferably provided as flowable formulations, and are generally provided as liquids or semisolids. The drugs may be anhydrous or aqueous solutions, suspensions or complexes, and may be formulated with pharmaceutically acceptable vehicles or carriers, as well as additional inert or active ingredients. The drugs of formulations suitable for delivery using the invention may be in various forms, such as uncharged molecules, components of molecular complexes or pharmacologically acceptable salts. Also, simple derivatives of the agents (such as prodrugs, ethers, esters, amides, etc.) that are easily hydrolyzed by body pH, enzymes, etc., can be employed. Preferably the agents are formulated so as to remain stable for long periods of storage on the shelf or under refrigeration, as well as for long periods stored in an implanted drug delivery system of the invention.

Of particular interest is the treatment of diseases or conditions that require long-term therapy, *e.g.*, chronic and/or persistent diseases or conditions for which therapy involves treatment over a period of several days (*e.g.*, about 3 days to 10 days), to several weeks (*e.g.*, about 3 or 4 weeks to 6 weeks), to several months or years, up to including the remaining lifetime of the subject. Subjects who are not presently suffering from a disease or condition, but who are susceptible to such may also benefit from prophylactic therapies using the devices and methods of the invention.

**USE OF THE CATHETER OF THE INVENTION**

The catheter of the invention can be used in a wide variety of subjects. For example, the catheter can be implanted with an associated drug delivery device at any convenient site within the subject's body and oriented for delivery to any desired treatment site. In one embodiment, the catheter and the associated drug delivery device are partially or completely implanted, with at least portion of the drug delivery device retained at an accessible, external or subcutaneous site within the subject's body (*e.g.*, under the skin of the arm, shoulder, neck, back, or leg) or within a body cavity (*e.g.*, within the mouth). The site of implantation can be at a site close (*e.g.*, within a few centimeters, *e.g.*, within about 0.8 inch), or at a site relatively distant (*e.g.*, more than about 12 inches, generally greater than about 20 inches to about 40 inchess) from the treatment site, and thus the ultimate site of drug

delivery. A single catheter and/or drug delivery device, or two or more catheters and/or drug delivery devices can be implanted in a subject during the course of a therapeutic program.

In one embodiment, the catheter is primed with drug prior to implantation, *e.g.*, the drug delivery conduit is substantially pre-filled with drug. Priming of the catheter reduces delivery start-up time, *i.e.*, time related to movement of the drug from the drug delivery device to the distal end of the catheter. This feature is particularly advantageous where the drug delivery device releases drug at or below a low or very low volume rate (*e.g.*, 0.4 μl/day) or less. The drug used to prime the catheter may be the same drug that is delivered from the drug delivery device, or may be a different drug or different formulation of the drug, *e.g.*, the catheter itself may provide for a component of the therapeutic regimen.

The catheter can be designed for temporary use, or to remain implanted in the subject for an extended period, *e.g.*, from several days, to several weeks or months, and can be designed to be substantially permanently implanted in the subject (*e.g.*, for the subject's remaining lifespan). The drug delivery devices can be removably attached to the catheter, or may be permanently affixed. Where the drug delivery device is removably attached, the drug delivery device can be removed following a desired drug administration period, and, where desirable replaced with a similar or different drug delivery device.

The devices of the present invention (*e.g.*, catheter, drug delivery system comprising a drug delivery device and catheter) are preferably rendered sterile prior to use. This may be accomplished by separately sterilizing each component, *e.g.*, by gamma radiation, steam sterilization or sterile filtration, *etc.*, then aseptically assembling the final system. Alternatively, the devices may be assembled, then terminally sterilized using any appropriate method.

To implant the catheter, the stylet is inserted into the catheter, and used to position the catheter within the subject's body during implantation. Once the catheter is positioned where desired, the stylet is withdrawn. The empty lumen can then be filled with a material (*e.g.*, liquid, solid, or semi-solid), which material preferably comprises an antimicrobial agent (*e.g.*, bacteriostatic or bactericidal agent), and/or can be sealed off, i.e., the stylet lumen proximal aperture plugged with a solid material, crimped, or heat-sealed. Alternatively, the stylet can be substantially permanently positioned within the catheter stylet lumen.

Insertion of the catheter is generally accomplished in a manner similar to insertion of any of a variety of catheters, *e.g.*, under aseptic conditions with at least some local or general anesthesia administered to the subject. Where the catheter comprises radiopaque material, insertion of the catheter can be monitored by X-ray or other means of visualization of the insertion process.

After implanting, the proximal section of the catheter can be cut to length and the drug delivery device attached. The drug delivery device and any remaining portion of the catheter

completely implanted in the subject. The drug delivery device, and generally at least a portion of the catheter, are retained at an access site as described above.

Where desired, the drug delivery device and/or catheter can be anchored within the subject by any suitable conventional means. For example, sutures can be used to secure a proximal end of the drug delivery device and/or catheter at or near an implantation site. Following implantation, the catheter defines a drug delivery conduit that provides for transport of drug from a proximal catheter end to a distal catheter end, where the catheter proximal end is preferably maintained at the initial access site or implantation site and the catheter distal end is positioned so a drug delivery outlet of the catheter is positioned at, within, or adjacent the desired treatment site. The invention as shown and described is considered to be the one of the most practical and preferred embodiments. It is recognized, however, that the departures may be made therefrom which are within the scope of the invention and that obvious modifications will occur to one skilled in the art upon reading this disclosure.

# CLAIMS

What is claimed is:

1. A catheter comprising:

an elongate catheter body comprising a proximal end and a distal end, said catheter body defining a delivery lumen extending from said catheter body proximal end to a site at or near said catheter body distal end, said catheter body further defining a stylet lumen, wherein said stylet lumen comprises a stylet lumen distal end configured to permit a stylet to abut the stylet lumen distal end, and a stylet lumen proximal end comprising a stylet lumen proximal aperture distal to the catheter body proximal end.

2. The catheter of claim 1, wherein said stylet lumen distal end is closed.

3. The catheter of claim 1, wherein said stylet lumen distal end comprises an opening sized to permit fluid sampling through the stylet lumen.

4. The catheter of claim 1, wherein the delivery lumen is suitable for delivery of drug at a low volume rate.

5. The catheter of claim 4, wherein the volume rate is from about 0.01 μl per day to about 200 μl per day.

6. The catheter of claim 1, wherein the delivery lumen has an inner diameter in the range of about 0.001 inch to about 0.0125 inch.

7. The catheter of claim 1, wherein the delivery lumen has an inner diameter in the range of about 0.002 inch to about 0.030 inch.

8. The catheter of claim 1, wherein the stylet lumen has an inner diameter of about 0.007 inch to about 0.010 inch.

9. The catheter of claim 1, wherein said stylet lumen distal end is at a distance of about 0.004 inch to about 4 inches from said catheter body distal end.

10. The catheter of claim 1, wherein said stylet lumen proximal aperture is at a distance of about 0.4 inch to about 4 inches from said catheter body proximal end.

11. The catheter of claim 1, wherein said stylet lumen and said delivery lumen are juxtaposed.

12. The catheter of claim 1, wherein said stylet lumen and said delivery lumen are defined by coaxial members of the catheter body.

13. The catheter of claim 1, wherein said catheter body comprises a first elongate member defining said delivery lumen and a second elongate member integral with said first elongate member and defining said stylet lumen.

14. The catheter of claim 1, wherein the catheter body comprises a biocompatible material.

15. The catheter of claim 14, wherein the material of the catheter body is selected from the group consisting of nickel titanium, silicone, polyethylene, an ethylene vinyl acetate copolymer, a polyvinylchloride, polymethylmethacrylate, polyethylmethacrylate, polymethacrylate, ethylene glycol dimethacrylate, ethylene dimethacrylate, hydroxymethyl methacrylate, polyurethane, polyvinylpyrrolidone, 2-pyrrolidone, polyacrylonitrile butadiene, a polycarbonate, polyamides, a fluoropolymers, a polystyrene, a styrene acrylonitrile homopolymer, a styrene acrylonitrile copolymer, cellulose acetate, an acrylonitrile butadiene styrene homopolymer, acrylonitrile butadiene styrene copolymer, polyvinylchloride, silicone rubber, polymethylpentene, a polysulfone, a polyester, a polyimide, polyisobutylene, polymethylstyrene, a polyvinyl chloride elastomer, a polyolefin homopolymeric elastomer, a polyolefine copolymeric elastomer, a urethane-based elastomer, a silicone elastomer, a natural rubber, and a synthetic rubber.

16. The catheter of claim 1, wherein the catheter body has an outer diameter in the range of about 0.030 inch to about 0.060 inch.

17. The catheter of claim 1, wherein the catheter further comprises a stylet positioned within the stylet lumen.

18. The catheter of claim 17, wherein the stylet comprises a material selected from the group consisting of metal, a metal alloy, carbon fiber, a polycarbonate, a polymer, plexiglass, stainless steel, parylene-coated stainless steel, Teflon-coated stainless steel, and nickel titanium.

19. The catheter of claim 1, wherein the catheter body further comprises a radiopaque marker.

20. The catheter of claim 1, wherein the catheter further comprises an attachment element for attaching a drug delivery device to the catheter body proximal end.

21. A drug delivery system comprising:
the catheter of claim 1, and
a drug delivery device;
wherein the drug delivery device is attached to the catheter to facilitate delivery of a drug from the drug delivery device and through the delivery lumen defined by the catheter body.

22. The drug delivery system of claim 21, wherein the catheter is detachably attached to the drug delivery device.

23. The drug delivery system of claim 21, further comprising a stylet positioned within said stylet lumen.

24. The drug delivery system of claim 23, wherein the system is provided in a sterile package.

25. The drug delivery system of claim 21, wherein the drug delivery device is a convective drug delivery device.

26. The drug delivery system of claim 21, wherein the drug delivery device is a diffusive drug delivery device.

27. The drug delivery system of claim 21, wherein the drug delivery device facilitates controlled release of drug at a volume rate of from about 0.01 μl/day to about 200 μl/day.

28. The drug delivery system of claim 21, further comprising a connector, wherein at least a portion of said connector is adapted for stable positioning within the stylet lumen proximal aperture, and wherein at least a portion of said connector is adapted for attachment to said delivery device, thereby facilitating attachment of said delivery device to said catheter.

29. A method for delivery of a drug to a treatment site in a subject, the method comprising the step of:

implanting the catheter of claim 1 into a subject, wherein said implanting provides a drug delivery pathway from the proximal end of the catheter, through the delivery lumen, and out a drug delivery outlet positioned at a treatment site in a subject; and

introducing a drug into the delivery lumen of the catheter,

wherein the drug is delivered to the treatment site in the subject.

30. The method of claim 29, wherein the delivery lumen is suitable for delivery of the drug at a low volume delivery rate.

31. The method of claim 30, wherein the low volume delivery rate is from about 0.01 μl/day to about 200 μl/day.

32. The method of claim 31, wherein the catheter is substantially filled with the drug prior to implanting.

33. The method of claim 31, wherein the treatment site is subcutaneous, percutaneous, intravenous, intrathecal, intramuscular, intra-arterial, intravascular, intraperitoneal, intraspinal, epidural, intracranial, intracardial, peritumoral, or intratumoral.

34. The method of claim 33, wherein the treatment site is a site within a kidney, liver, pancreas, heart, lung, eye, ear, lymph node, breast, prostate, ovary, testicle, thyroid, spleen, central nervous system, skeletal muscle, bone, lymph vessel, artery, arteriole, capillary bed, blood vessel, vein, peripheral nervous system, digestive system, gastrointestinal tract, urinary bladder, gall bladder, adrenal gland, adipose tissue, parathyroid gland, uterus, fallopian tube, skin, tumorous growth, autologous graft, synthetic graft, or site of microbial infection.

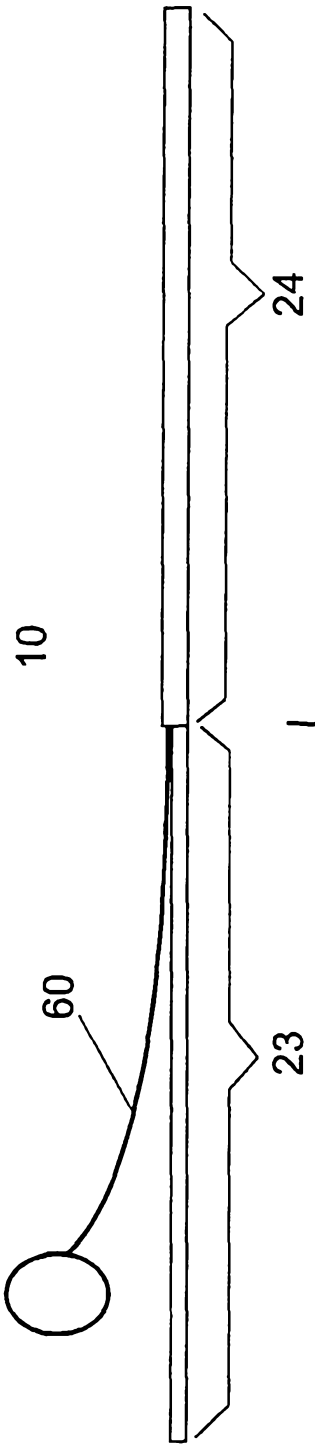


FIGURE 1

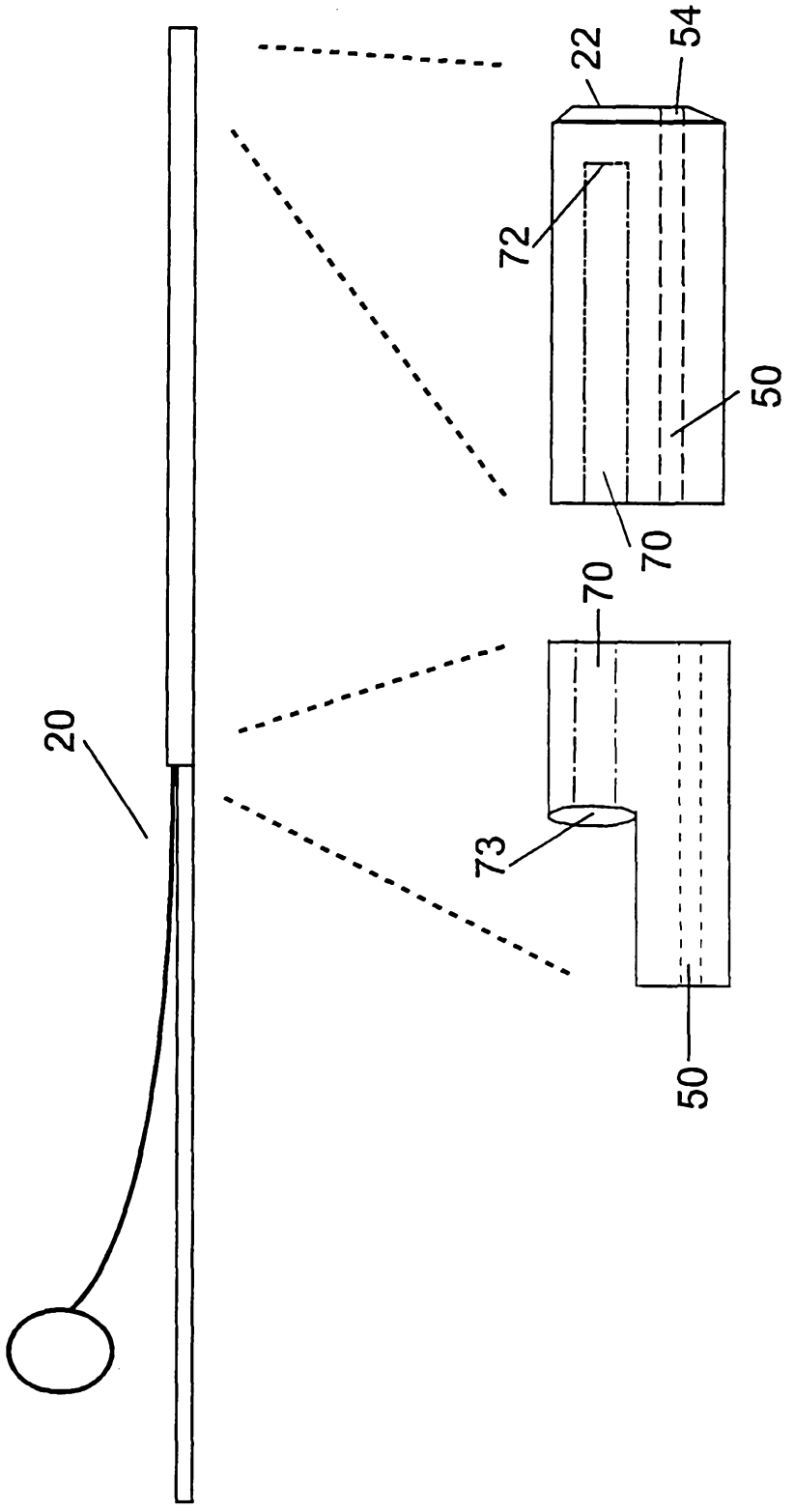


FIGURE 3

FIGURE 2

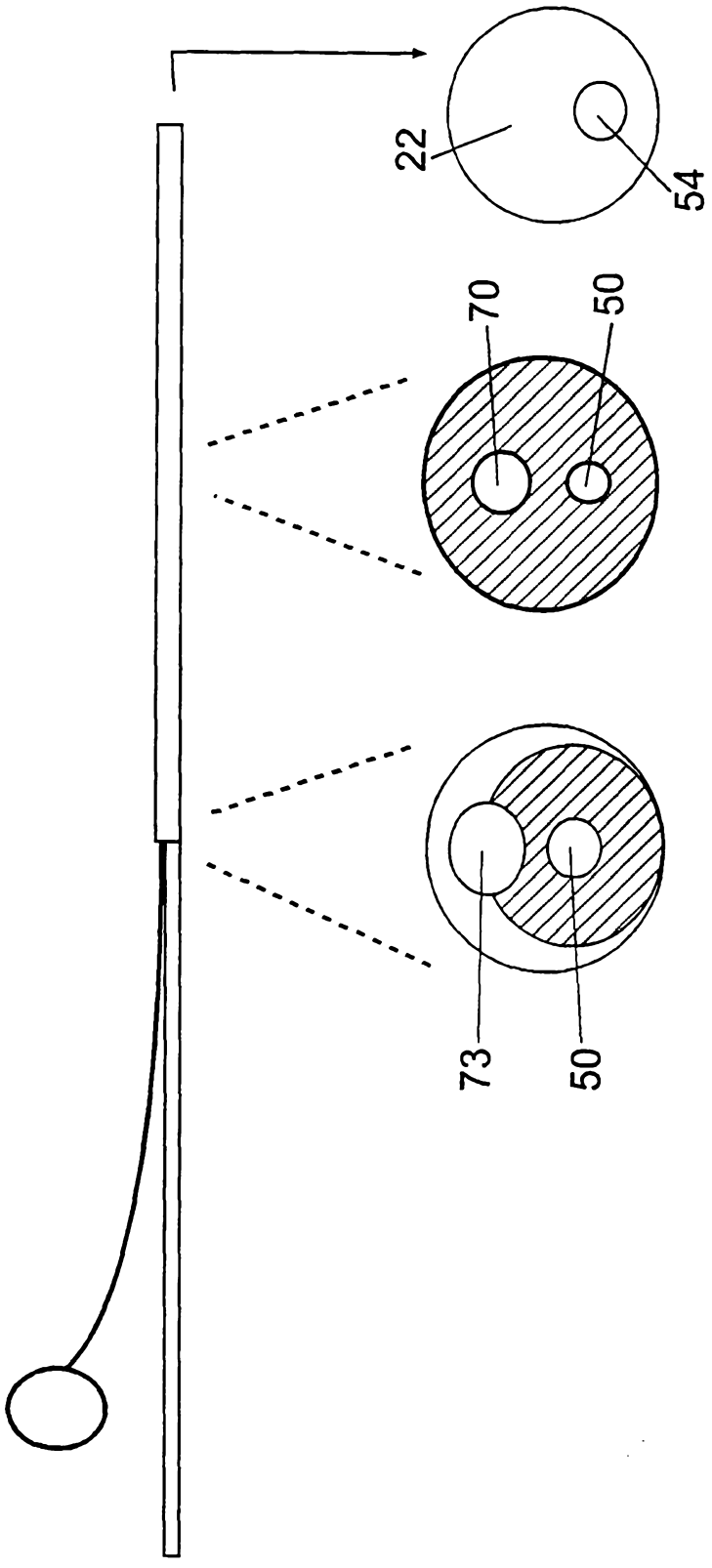


FIGURE 6

FIGURE 5

FIGURE 4

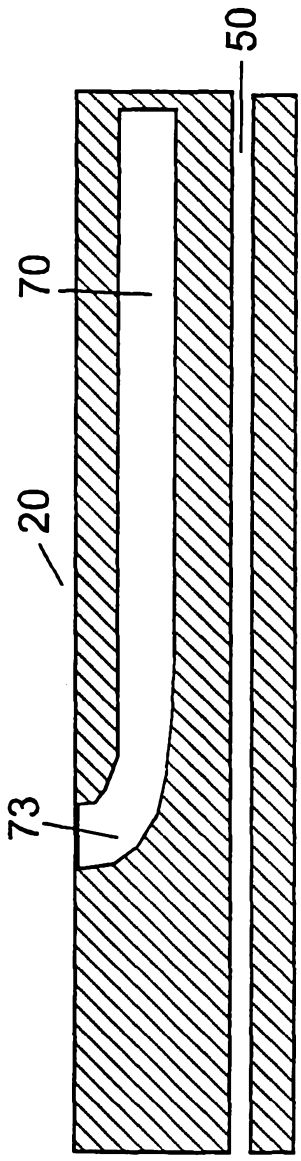


FIGURE 7A

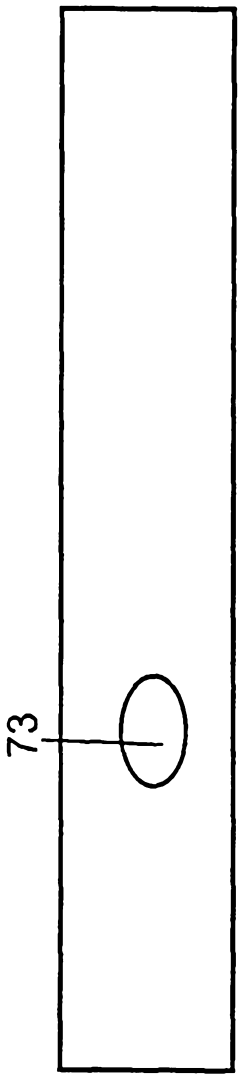


FIGURE 7B

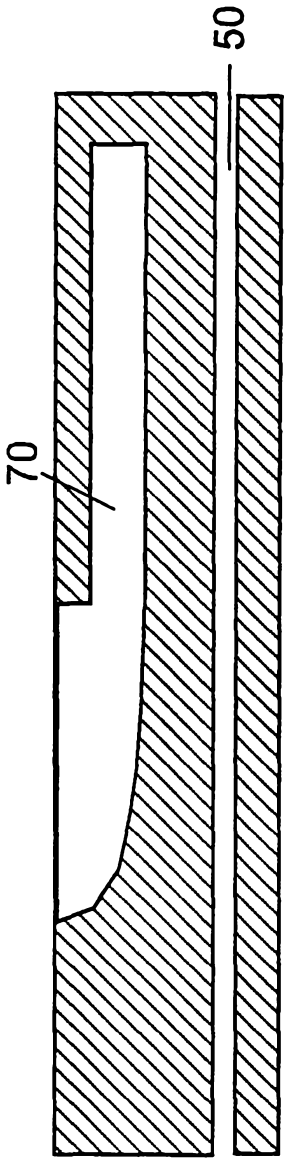


FIGURE 8A

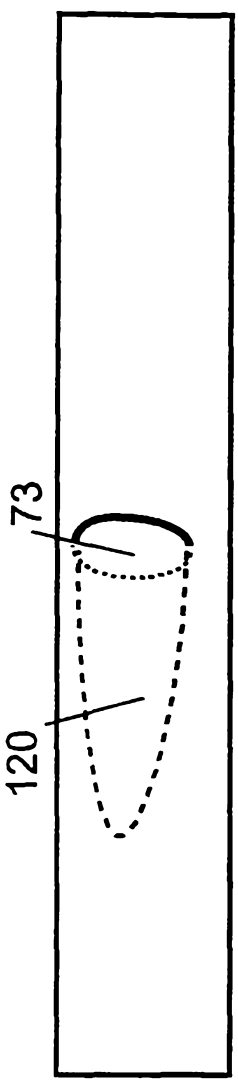


FIGURE 8B

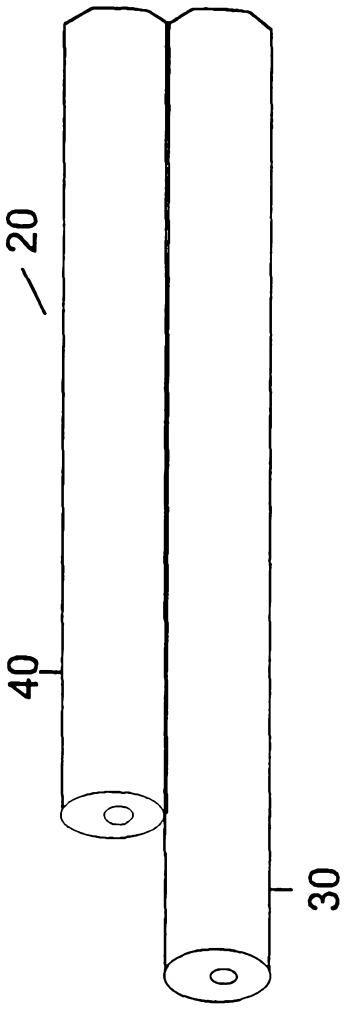


FIGURE 9

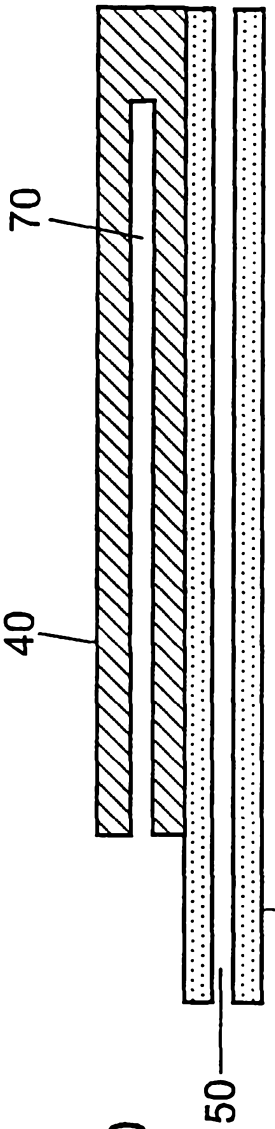


FIGURE 10

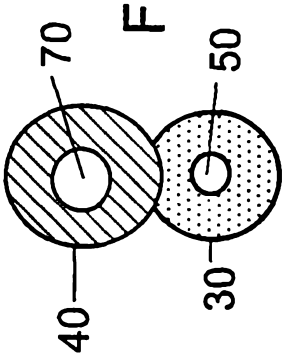


FIGURE 12

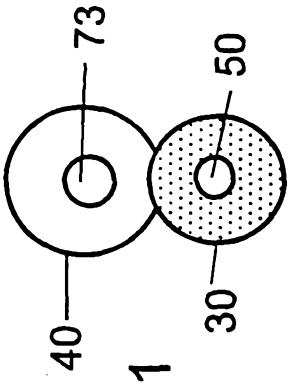


FIGURE 11

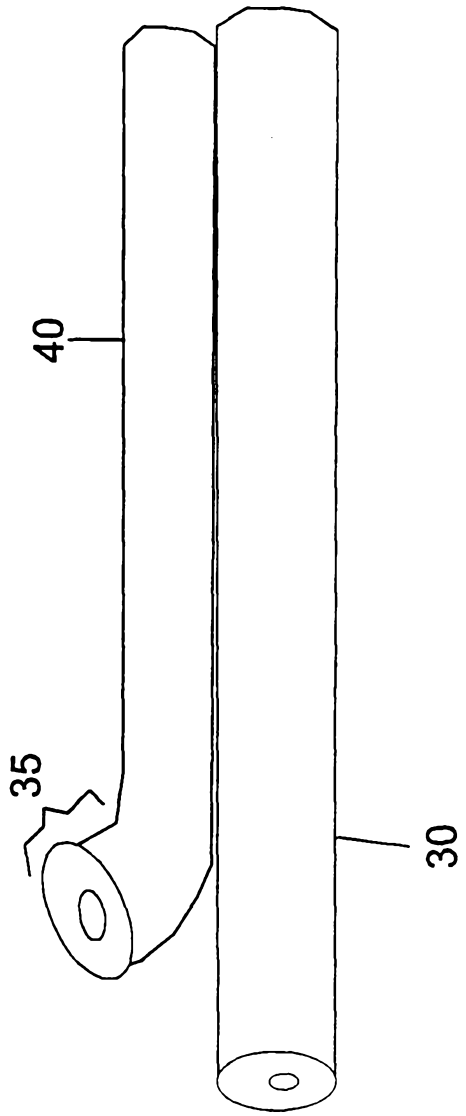


FIGURE 13

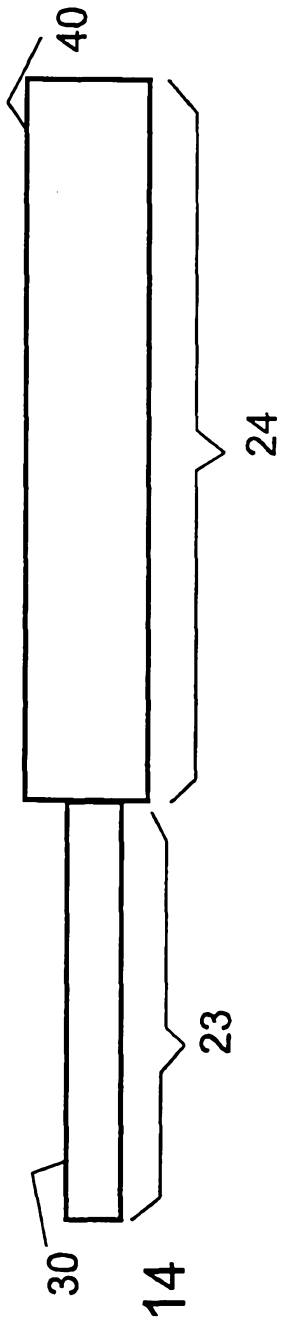


FIGURE 14

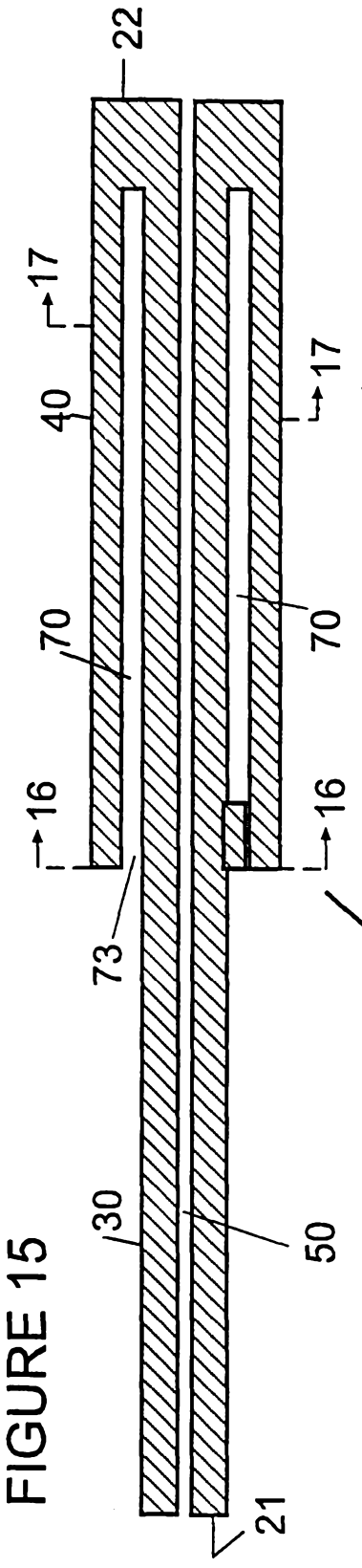


FIGURE 15

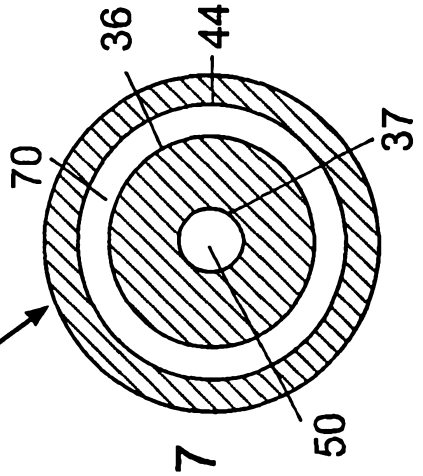


FIGURE 17

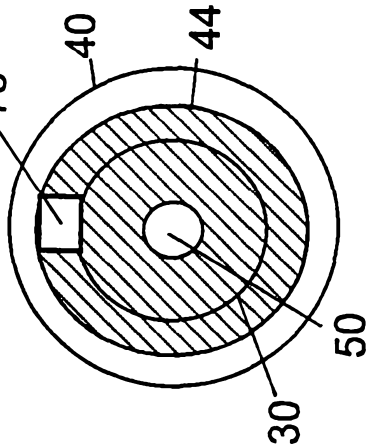


FIGURE 16

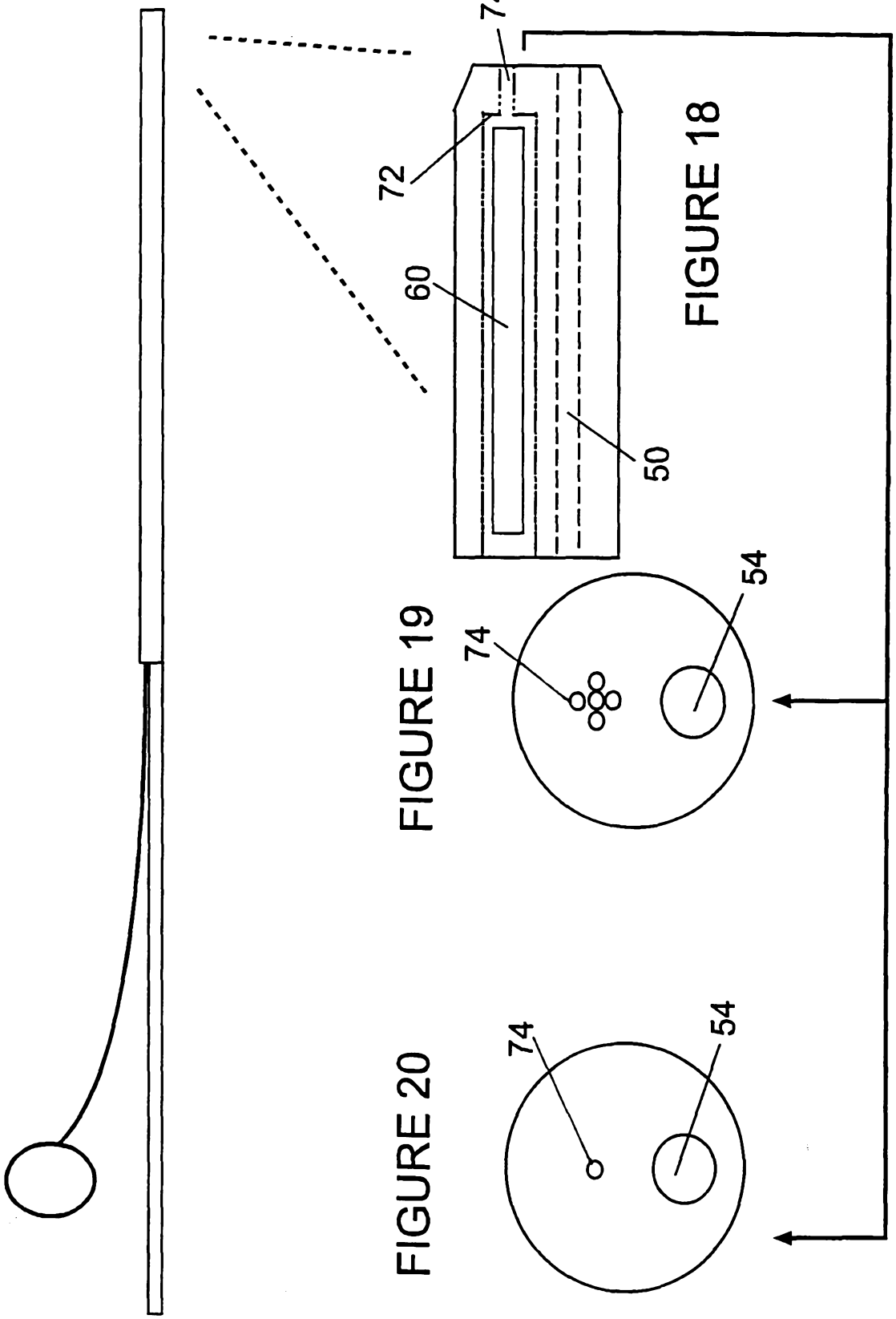


FIGURE 18

FIGURE 19

FIGURE 20

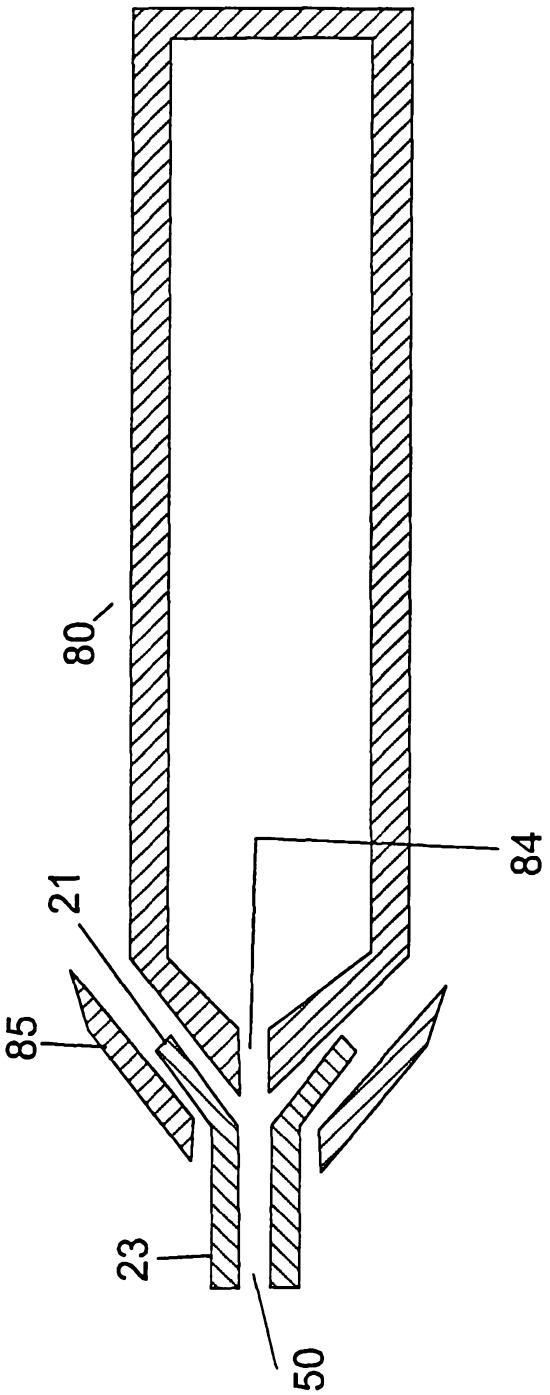


FIGURE 21

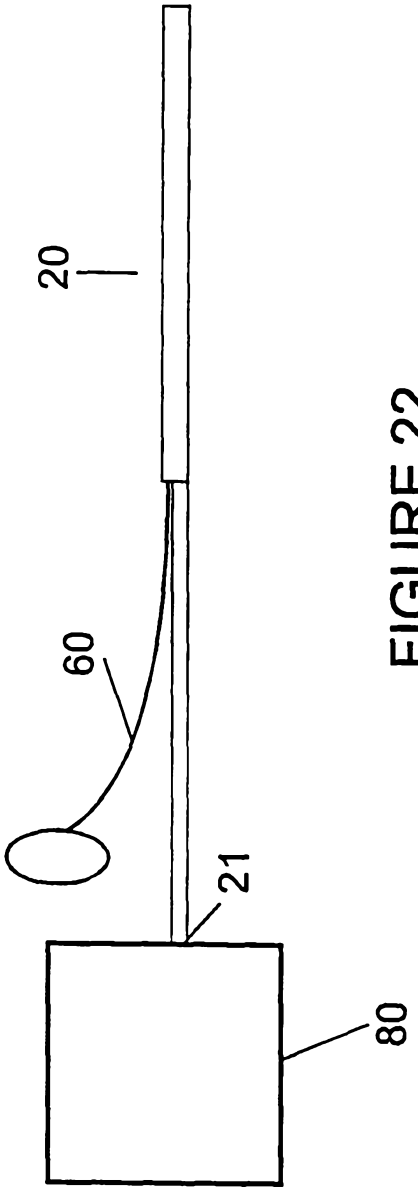


FIGURE 22

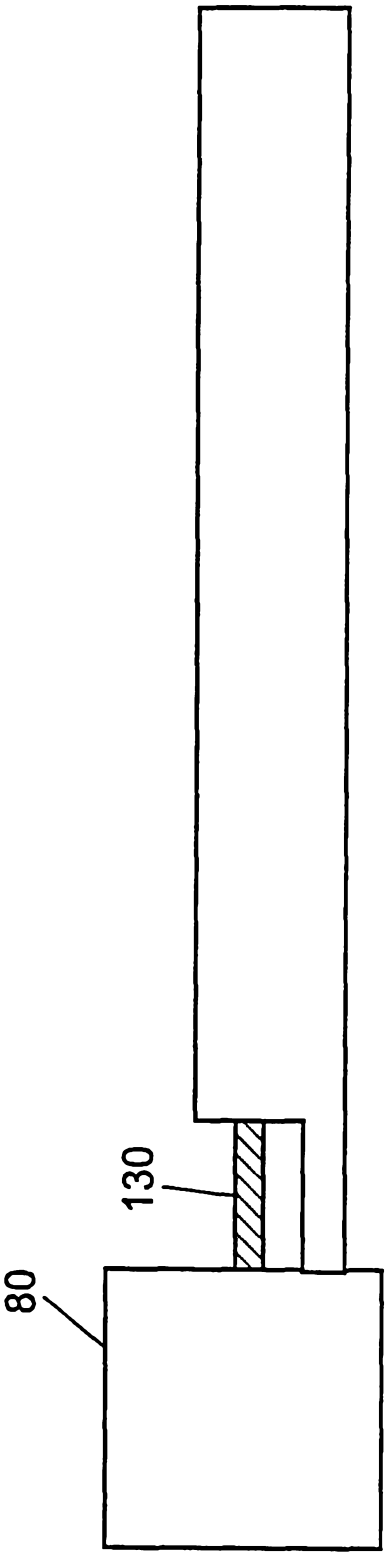


FIGURE 23A

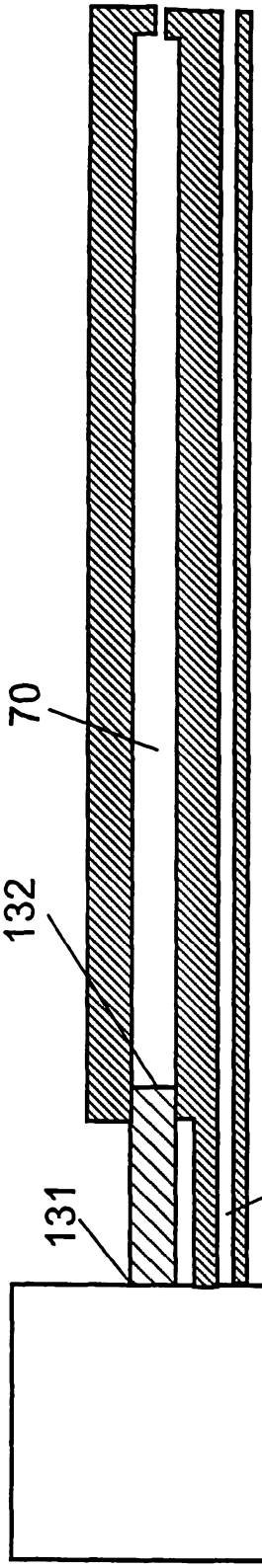


FIGURE 23B