Dec. 29, 1931. F. PLANCQ 1,839,118

POLISHING MACHINE

Filed May 31, 1927 7 Sheets-Sheet 1

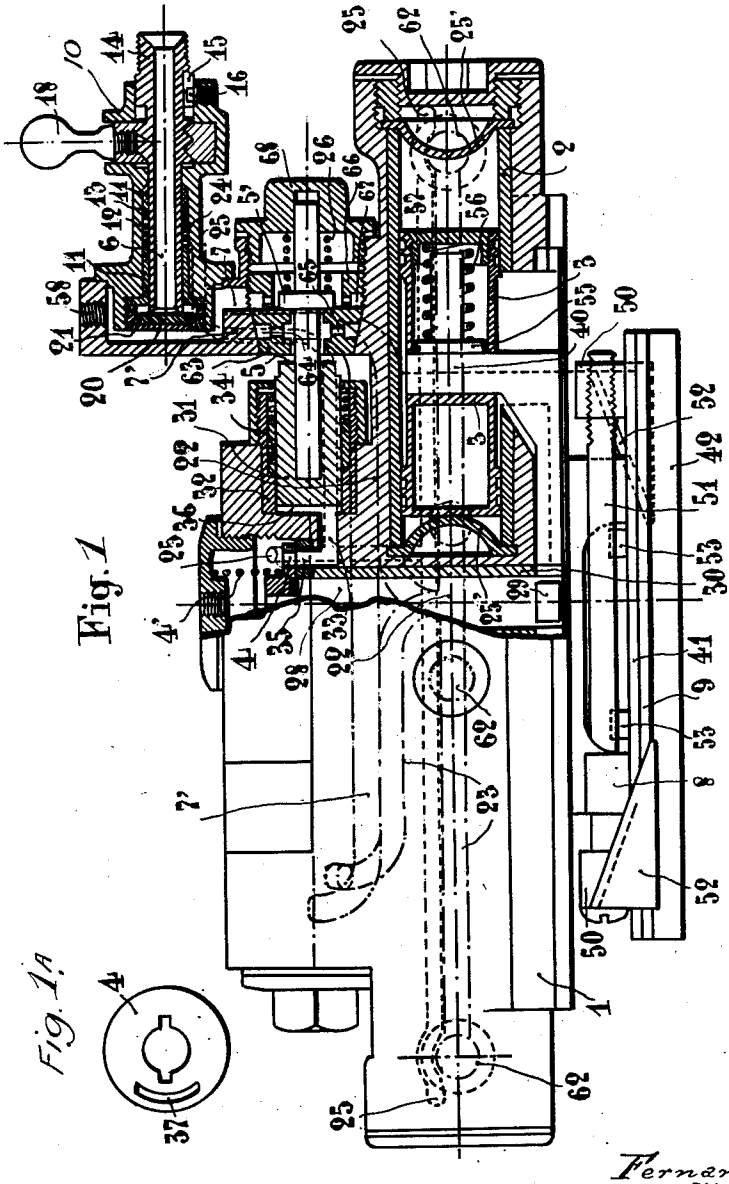

Fig. 1

Fig. 1A

INVENTOR:
Fernand Plancq
BY
[signature]
ATTORNEY

Dec. 29, 1931. F. PLANCQ 1,839,118

POLISHING MACHINE

Filed May 31, 1927 7 Sheets-Sheet 2

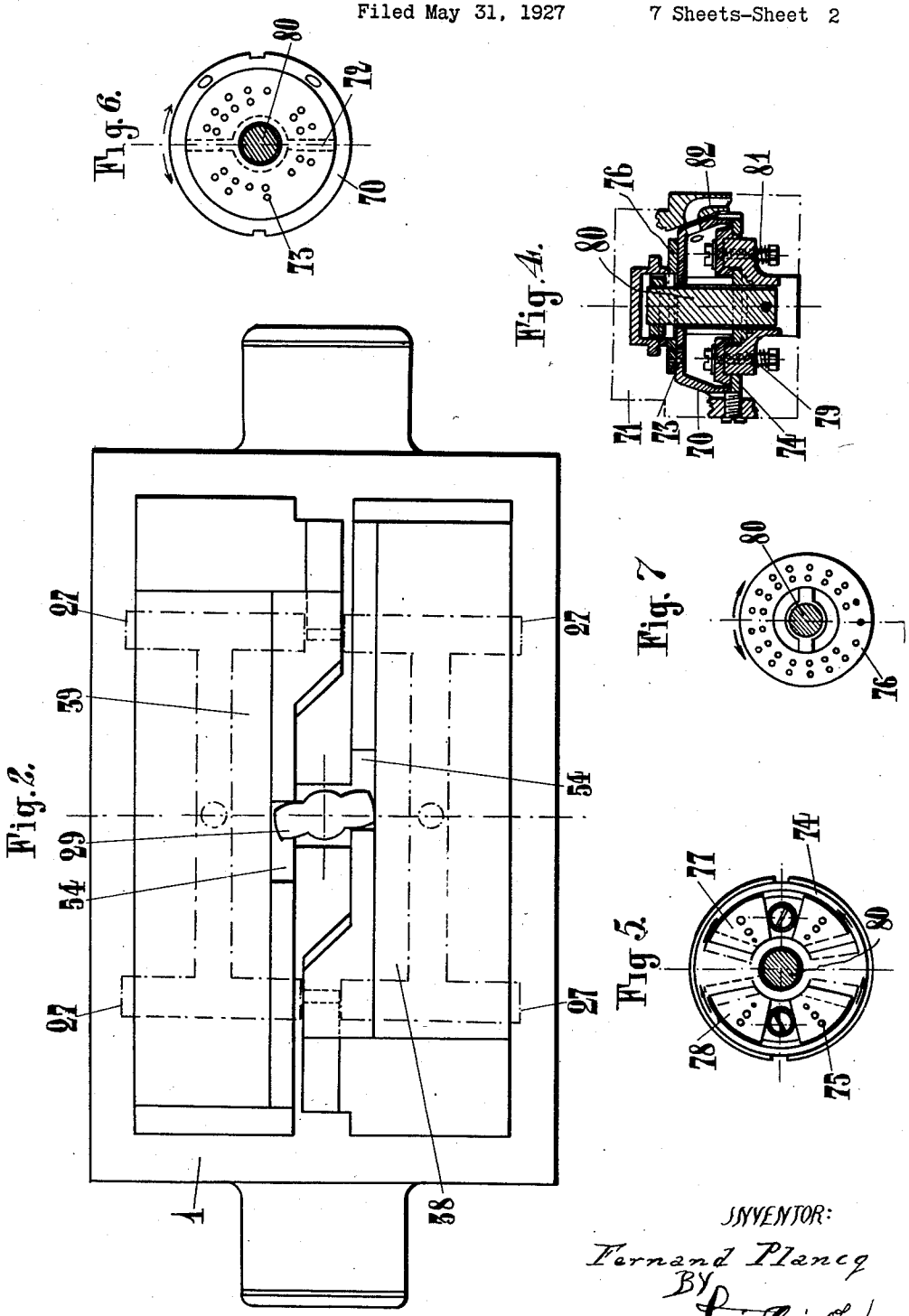

INVENTOR:
Fernand Plancq
BY
[signature]
ATTORNEY

Dec. 29, 1931. F. PLANCQ 1,839,118

POLISHING MACHINE

Filed May 31, 1927 7 Sheets-Sheet 3

Fig. 3.

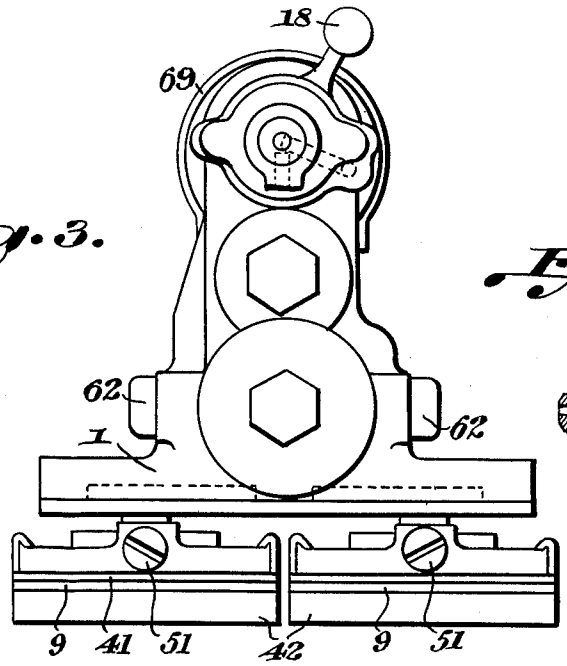

Fig. 3.a

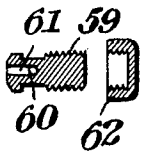

Fig. 8.

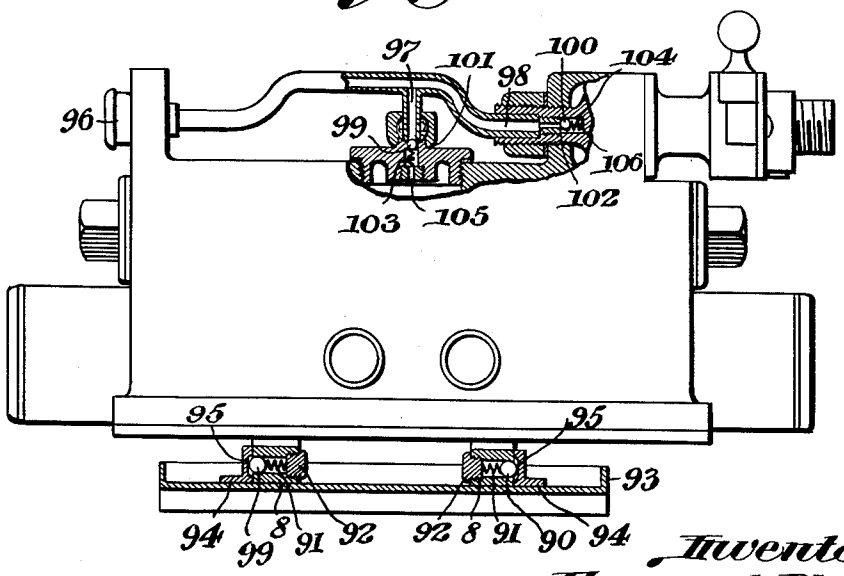

Inventor:
Fernand Plancq

By Emil Bonnelycke Atty.

Dec. 29, 1931. F. PLANCQ 1,839,118

POLISHING MACHINE

Filed May 31, 1927 7 Sheets-Sheet 4

Fig. 12.

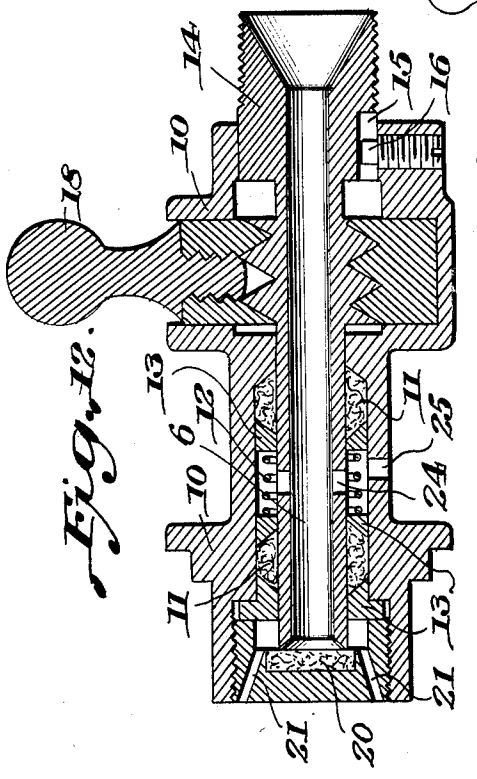

Fig. 9.

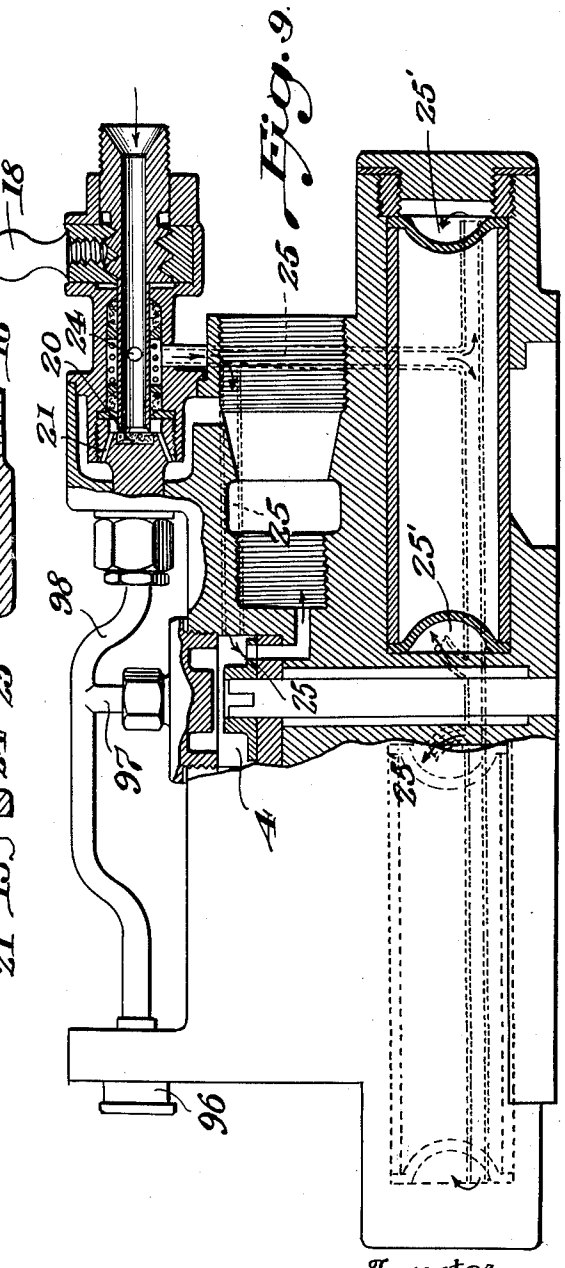

Inventor
Fernand Plancq.
By Emil Bönnelycke
attorney.

Dec. 29, 1931. F. PLANCQ 1,839,118

POLISHING MACHINE

Filed May 31, 1927 7 Sheets-Sheet 5

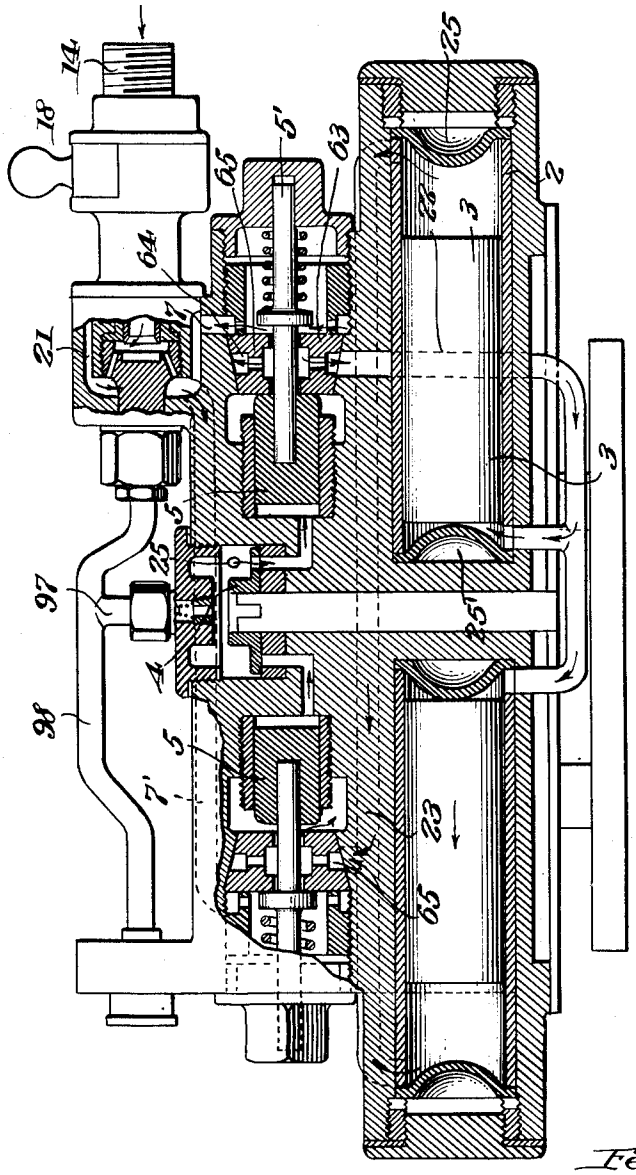

Fig. 10.

Inventor
Fernand Plancq,

By Emil Bonnelycke

Attorney

Dec. 29, 1931. F. PLANCQ 1,839,118

POLISHING MACHINE

Filed May 31, 1927 7 Sheets-Sheet 6

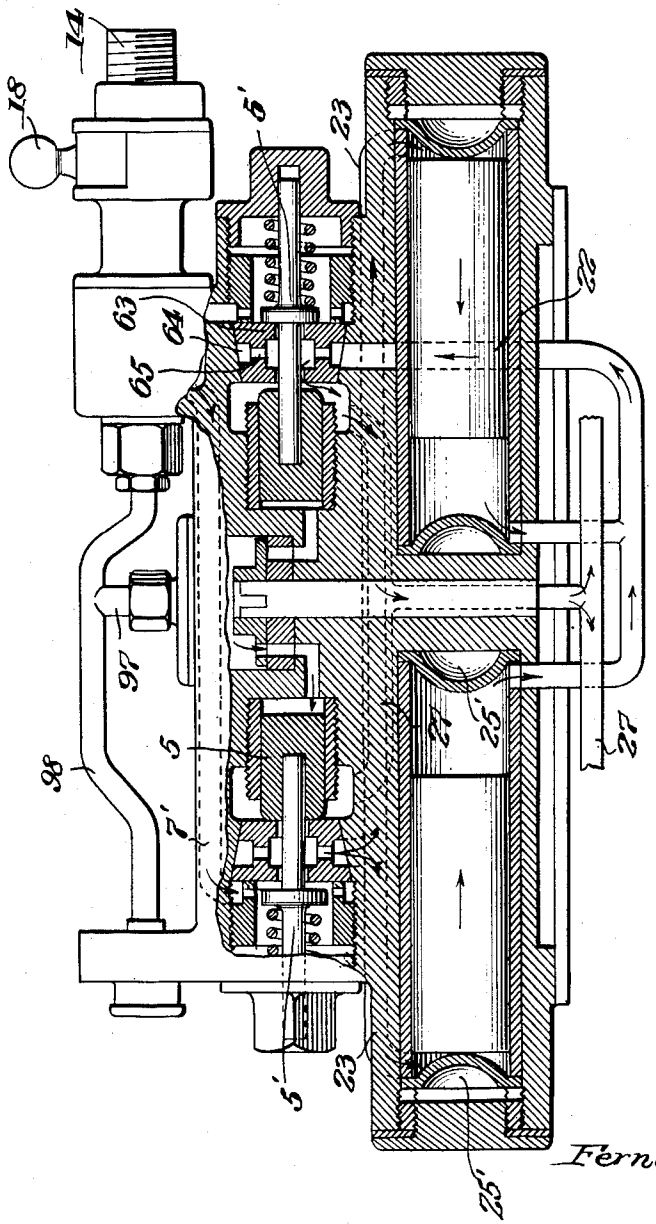

Fig. 11.

Inventor
Fernand Plancq,
By Emil Bonnelycke
Attorney

Dec. 29, 1931. F. PLANCQ 1,839,118

POLISHING MACHINE

Filed May 31, 1927 7 Sheets-Sheet 7

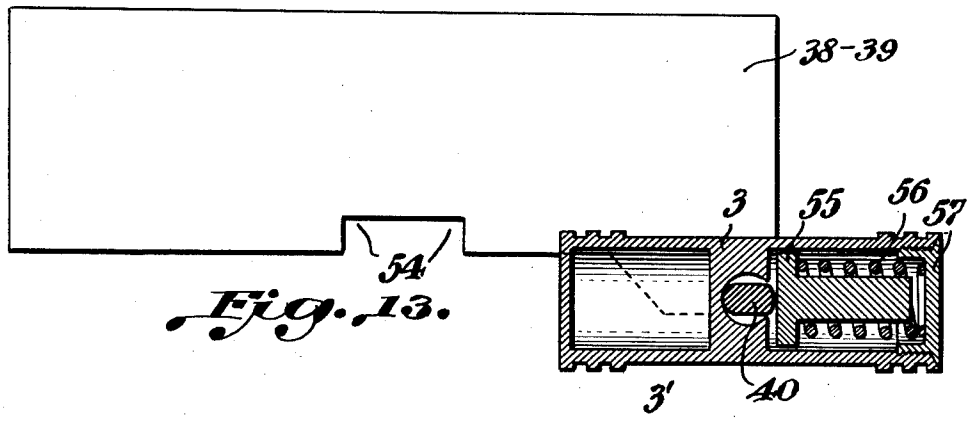

Fig. 13.

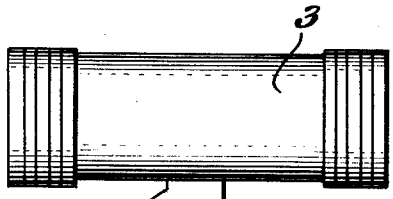

Fig. 14.

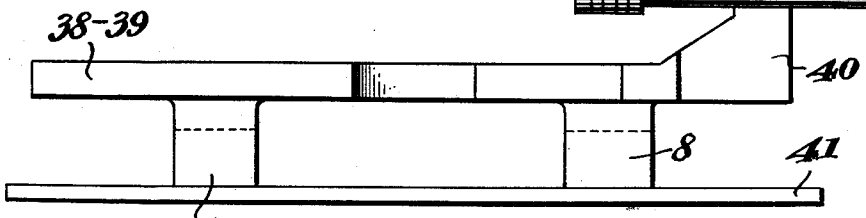

Fig. 15.

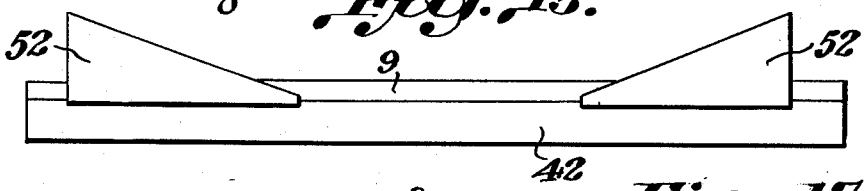

Fig. 16.

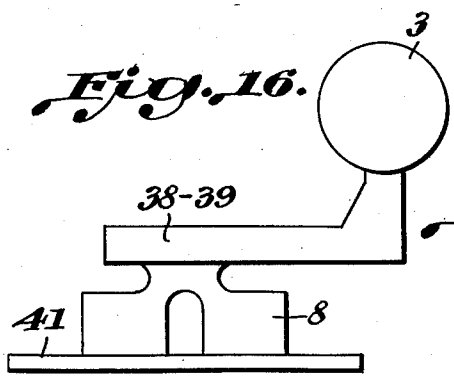

Fig. 17.

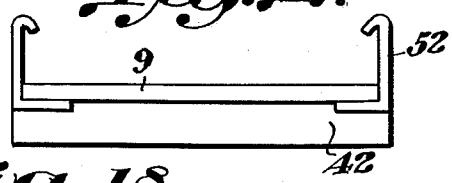

Fig. 18.



Inventor;
Fernand Plancq.

By Emil Bounelychk Atty.

Patented Dec. 29, 1931 1,839,118

UNITED STATES PATENT OFFICE

FERNAND PLANCQ, OF PARIS, FRANCE

POLISHING MACHINE

Application filed May 31, 1927, Serial No. 195,523, and in France July 2, 1926.

The object of my invention is to provide a reciprocating motion device operated by means of a fluid under pressure, such as, for instance, compressed air, and designed to effect the pumicing or polishing of any flat or convex surfaces, such as wooden work, paintings, etc.

The drawings appended hereto illustrate, as an example, an embodiment of such a device.

In said drawings:

Figure 1 is a side elevation of the apparatus, with parts shown in section.

Fig. 1A represents a detail of Figure 1.

Fig. 2 is a bottom plan view of the apparatus with the runners removed.

Fig. 3 is an end view of Figure 1.

Fig. 3A represents a detail of Figure 3.

Figs. 4, 5, 6 and 7 are detail views showing a modification of the pressure fluid distributor.

Fig. 8 is a view of the apparatus partly in section, illustrating the mounting of the runners and the lubricating arrangement.

Fig. 9 is a diagrammatic showing of the passages which are constantly supplied with pressure fluid.

Fig. 10 is a diagrammatic showing of the air admission system to the inner ends of the cylinders.

Fig. 11 is a similar view but indicating admission to the outer ends of the cylinders.

Fig. 12 is an enlarged section through the valve controlling pressure fluid admission to the device.

Fig. 13 illustrates the mounting of the slides on the pistons.

Fig. 14 is a front view of a portion of Fig. 1.

Fig. 16 is a side view of a portion of Fig. 1, and

Figs. 15, 17 and 18 are detail views showing the mounting for the removable runners.

My device or machine as illustrated by Figures 1 to 5, inclusive, is composed of a frame 1, two cylinders 2. Figures 16 and 17, within which slide two double pistons 3 (one per cylinder) travelling simultaneously but in opposite directions, a rotary distributor 4 kept normally applied against its seat by means of a spring 4′, and two sets of double-beat valves 5 and 5′. The whole is fed by a pressure fluid regulating sluice opening at 7—7′ into the above mentioned two cylinders. The underside of the machine is fitted with slide bearings 8 and with two interchangeable slippers or runners 9.

The peculiar feature of my device or machine is the fact that it has pistons reciprocating in opposite directions the motion of which is directly transmitted to the runners 9. This alternating motion is obtained without the use of any intermediate gear, such as a connecting rod or other device, but simply through the arrangement of the pressure fluid distribution.

In my machine the cylinders may be arranged either side by side or along the same axis in line with each other.

The compressed air or other fluid under pressure employed for driving the pistons is supplied from any of usual sources, and it is fed into the machine through a double acting sluice valve. This sluice valve is formed of a barrel 10 inside of which are arranged two stuffing boxes 11 the packings of which are maintained under constant pressure by means of a spiral spring 12 that is interposed between the movable members or rings 13. A slidable tube 14 projects through the central portions of the stuffing boxes and is provided with an externally-threaded outer end portion adjacent which is formed a longitudinal groove 15. The latter is adapted to receive a spur 16 mounted in the barrel 10 which serves to center tube 14 and prevent it from rotating while still permitting its sliding movement.

The tube may be slid by means of a handle 18 screwed on the threaded portion and blocked between two cheeks of sluice valve barrel 10.

On being turned, handle 18, which is held as to lateral displacement by the cheeks of the sluice valve barrel, shifts tube 14 in the direction required to open or close a passage for the pressure fluid. Closing is ensured by the inner end of the tube getting blocked on a stationary disk 20 made of plastic material.

When the sluice tube is in open position, the

pressure fluid passes through apertures 21 provided around disk 20 and thence around valve 5′ and duct 22 and into the adjacent ends of the cylinders as shown in Figure 16.

Between the two stuffing-box packings, the sluice tube is perforated by opposite holes 24 offering permanent passage for air or other fluid pressure from the sluice to certain parts of the device as hereinafter described.

Whether the sluice is open or closed, fluid under constant pressure is always supplied to passages 25 which are in communication with pockets 25′ arranged at each end of the cylinders and having flexible walls extending into the cylinders, said pockets serving as piston shock absorbers or buffers in the event of the device working idle; see Figure 15.

There is also a constant supply of pressure fluid through passage 25, Fig. 9, to the space above the distributing disk 4 which controls distribution valves 5—5′, whether the sluice is open or closed.

The admission of pressure fluid to drive the pistons and the exhaust of said fluid after it has done duty are effected by means of the afore-mentioned double-beat valves 5—5′, said valves being arranged in such manner that they always lie in the end position toward which the associated piston is travelling. These valves are stationary relative to each other and work in an opposite manner; that is to say, when one of them is seated, the other one is unseated; but they move in unison. They are subjected in one direction to constant fluid pressure and in the other direction are influenced by an opposing spring 26.

The admission of pressure fluid to the cylinders 2 is controlled by the sets of valves 5′ in such manner that when the right-hand valve 5′ is away from its seat pressure fluid is admitted through passage 22 to the inner ends of the cylinders, while the left-hand valve 5′ is tight on its seat and prevents passage of fluid from passage 7′. This passage 7′ is supplied with compressed air or other fluid issuing from the sluice tube 6, through passages 21, as clearly shown in Figs. 10 and 11.

When, however, the valves shift to the opposite position, the right-hand valve 5′ is tight on its seat and prevents the passage of fluid therethrough, while the left-hand valve 5′ is open and allows the passage of the compressed air from passage 7′, through the valve seat, to passage 23, branching out to each of the outer ends of the cylinders 2. See Figure 17.

Referring to Figs. 10 and 11, it will be seen that duct 23 starts from between the seats of the left-hand valves 5—5′, and terminates, in separate branches, in the outer ends of the cylinders 2.

When the right-hand admission valve 5′ is away from its seat, as described above, the pistons 3 accomplish an outward working stroke and the left-hand exhaust valve 5, being away from its seat, permits the passage of the spent fluid from the outer cylinder ends, through passage 23, to the atmosphere.

When the left-hand admission valve 5′ is away from its seat, the pistons 3 accomplish an inward working stroke and the right-hand exhaust valve 5, being away from its seat, permits the passage of the spent fluid from the inner cylinder ends, through passage 22, to the atmosphere.

Upon completion of the working stroke, the exhaust stroke for the same ends of the cylinders begins, whereupon the valve position is reversed. The air admission valve 5′ is locked on its seat by the opposing spring 26 while the exhaust valve 5 is lifted from its seat. Exhaust valve 5 being in this position, the pressure fluid which has driven the pistons is exhausted through duct 22 or 23, and around the valve 5, through a special duct 27 that leads outside, as shown in Figure 17, this exhaust fluid being forced outward by the piston itself on its return travel.

In order to insure opening and closing of the valves 5, 5′, they are controlled by air or other fluid pressure supplied by the constant delivery from the sluice, which pressure is regulated by the circular distributing disk 4. The latter is controlled by a spindle 28 provided with a cam 29 and revolving in a socket, the operation of which will be hereinafter described. The circular disk 4 uncovers an orifice which corresponds to the direction of motion to be imparted to the pistons and permits the compressed fluid intended to operate the set of valves 5, 5′ to pass therethrough.

The construction and operation of one set of valves only will, for the sake of simplicity and clearness, be described.

Exhaust valve 5 is constituted by a cylindrical part of suitable diameter forming a piston 31 and moving within a cylinder 32 connected with the distributing disk through passage 33. Tightness of said cylinder and piston is insured by a stuffing-box 34 pressed in place by means of a spring shown in Figure 2. It will be noted that the cylinder 32 and stuffing-box 34 act as a guide for the piston 31.

The compressed fluid arrives from the distributor through duct 33 and acts upon the end face of the piston 31 to drive it forward, while the opposite end of said piston constitutes the valve 5 which is thereby locked on its seat. At this time, the exhaust is closed by valve 5 and admission opens around valve 5′, so that pressure fluid is admitted through duct 22 to the inner ends of the cylinders as shown in Fig. 10, driving the pistons 3 to the outer ends of the cylinders.

When the pistons reach the end of their

outward stroke, the circular disk 4 is shifted to reverse position by means of the cam 29, uncovering the orifice 35 of the distributor corresponding to the second set of valves. This second set of valves operates identically with the first set but controls the admission of fluid to the outer ends of the cylinder through duct 23, Figure 17, to cause the return or inner stroke of the pistons.

The pressure fluid that is stored in the chamber 36 to keep the valve 5 on its seat is let out through a semicircular duct 37, Figs. 1 and 11, provided in the thickness of disk 4 and communicating with the atmosphere. When the chamber 36 is thus exhausted, the spring 26 moves the valves 5, 5′ from the position shown in Fig. 10 to that shown in Fig. 11; this duct 37 serving for exhaust of both chambers of the valve cylinders.

The operation of the valves having been described, the distribution of pressure fluid to the pistons will now be explained. The compressed air or other fluid is admitted through double-inlet ducts 22—23 depending on the position of each set of valves 5 and 5′ These ducts 22—23 open at the ends of the cylinders 2 in such a manner that the inner ends of said cylinders are fed by one and the same duct 22, as shown in Figure 16, while the outer ends of the cylinders are fed through duct 23, as shown in dotted lines in Fig. 11. Each of these ducts 22—23 corresponds to a set of valves, duct 22 being controlled by the right-hand set and duct 23 by the left-hand set. The cylinders 2 within which pistons 3 move are positioned on one and the same axial line.

Supposing that the two pistons 3 are at the inner ends of cylinders 2, as shown in Fig. 10: at this moment distributor 4, which controls valves 5 and 5′, uncovers the orifice 35 corresponding to the right-hand set of valves, so that air is admitted against the end face of plunger 31, overcoming the pressure of spring 26. The exhaust valve 5 of this set is then closed and the admission valve 5′ is open, permitting air to pass through inlet duct 22 and to exert pressure on the bottoms of the pistons, thus driving the latter in the opposite direction towards the outer ends of the cylinders.

During this time the left-hand set of valves 5, 5′ is kept as shown in dotted lines in Fig. 10; that is, the chamber 36 is exhausted through port 37, so that the spring 26 forces the left-hand valve 5′ onto its seat and the left-hand valve 5 away from its seat, which will be easily understood, since the left-hand end of the device corresponds to the right-hand end which is shown in section. While the pistons 3 are making the outward stroke described above, the outer ends of the cylinders 2 are exhausted through the passages 23, around the left-hand valve 5 which, as explained, is away from its seat, and out to the atmosphere through the passages 27 shown in Fig. 11.

When the pistons have reached the end of their outward travel, the cycle is completed; then distributing disk 4 makes its pivoting motion, obstructs the corresponding orifice 35 previously uncovered, and the air stored in the chamber 36 formed by the cylindrical portion of the exhaust valve and its guide exhausts through semicircular duct 37 of disk 4 under pressure of the opposing spring 26.

At this time, the position of the valves is reversed. Referring to Fig. 11, it will be seen that air is admitted through passage 7′, passes around the left-hand valve 5′, and is admitted through passages 23 to the outer ends of the cylinders 2, causing the pistons 3 to move inwardly. The exhaust air in front of the pistons finds its way to the atmosphere through passages 22, around the right-hand valve 5, to exhaust passages 27.

When this inner stroke nears completion, distributing disk 4 is again rotated and the cycle begins anew.

The rotating motion of disk 4 being due to the cam control 29 is repeated every time the pistons reach the end of travel at a predetermined point, at which time the pistons are at once driven back towards the other end of the cylinders.

Pistons 3 are directly coupled with slides provided with tails 38, 39, 40. Said tails are run through the center of the pistons and reciprocated by and with the latter.

On the slides are provided supports 8 whereon are secured two plates (fixed runners) 41 permitting the mounting of the removable runners 9 mentioned at the beginning of this specification. Said removable runners may be furnished at 42 with leather, felt, sand paper, emery cloth, brushes, etc., or with any material or device serving to pumice, polish or brush; such material permitting various products such as polishing powders, etc., to be used.

Assembly of the removable runners is obtained by tightening wedges 50 by means of a threaded rod 51.

Each removable runner carries on its ends a set of slides 52 forming conical fasteners; within these conical fasteners two double wedges are housed; in the center of one of these wedges a bore permits the shank of a screw 51 to be passed through; in the center of the other wedge a suitable thread receives the said screw and by tightening the latter the blocking of the wedges in the slides is obtained, the wedges tightening on one another at the time the runners are made fast on their supports.

Between the said removable runners and the sand paper or emery cloth is intercalated a thickness of supple india-rubber calculated to procure a better utilization thereof.

The slides coupled to the pistons carry on their inner sides each a notch 54, the faces of which constitute a stop.

When the slides are reciprocated, the stop imparts a rotary motion to cam 29 the spindle 28 of which is in screw-threaded engagement with the distributing disk 4, so that the latter is rotated on its seat.

The stop of the slides is so adjusted as to operate the cam only when the pistons and, consequently, the slides reach the end of travel in either direction.

The operation of the distributor disk by the cam thus occurs when the piston travel is completed, and, therefore, the operation of the distributor and valves effects reciprocating action of the machine.

Pistons 3 are hollowed on one side, for lightness' sake, a rigid partition 3' being kept to hold the slide tail 40, and on the other side to afford a housing for a stop 55 which permanently bears on slide tail 40 under the influence of a powerful spring 56 secured by a plug 57 screwed into piston 3.

This spring mounting of the slide tails 40 in the pistons is for the purpose of avoiding jumping of the tails and any backlash between the two parts.

The pistons are double-acting, each face receiving the compressed air; consequently, each piston end comprises a set of piston rings.

Lubrication of the machine is effected by forcing a suitable grease through a screw hole 58 above the air admission chamber.

In passing through the ducts, compressed air takes along the grease which spreads throughout the parts, cylinders and pistons where friction occurs.

The runner slides are lubricated in the following manner: driving exhaust, the air follows ducts so arranged that, before discharging outside the machine, it has taken grease along and around the slides.

This air exhaust arrangement offers, furthermore, the advantage of facilitating lubrication, deadening the exhaust expansion noise and driving out any dust which might tend to find its way into the machine through the lower part thereof.

In practice, since the cylinders are built on the machine frame and are interchangeable, special couplings or nipples are provided, in order to avoid air losses between said cylinders and the ducts, which connect the ducts with the cylinders. Each of these couplings comprises a screw 59 adjustably mounted on the cylinder and formed with a somewhat conical end that serves to produce a tight joint. Screw 59 is formed with an opening 60 which coincides with the bore of the ducts in order to provide a through air passage into the cylinder, there being a port 61 so as to form a T-shape connection through the nipple between the ducts and the cylinders. Tightness of the external part of the screw is obtained by means of a cap 62, screwed on the thread.

The seats 63 of the distribution valve sets are made of any material suitable for this kind of machine parts and are conically mounted with an outer air circulation groove 64 and air holes 65 which insure proper positioning. These seats are secured in place by means of a threaded ring 66, also provided with an air-circulation groove 67 and with a hole for the passage of air to the admission valve.

The chamber of the compressed air admission valves is closed by a screwed plug 68. Said plug serves as an abutment for the valves and as stop for spring 26.

The top part of the machine is covered with a bonnet 69 forming a handle and affording a good working grip.

I wish it to be clearly understood that the above described embodiment is not intended as in any way limitative and that I reserve the right to introduce any constructional modifications without being deemed to depart from the scope of my invention.

For instance, the pressure fluid distribution valve device may be replaced by an air distribution system in which a rotating disk is controlled by the cam and the slides.

Such a circular motion distributor is shown in Figures 6 to 9, both inclusive, and is composed of a casing 70 made of conical form in view of ready mounting in the body 71 of the machine; it is heightwise divided by a tight partition 72 forming two chambers connected to the ends of the cylinders through the afore described ducts.

The upper part of said casing is provided with holes 73 corresponding to the two chambers of the casing and permitting admission of compressed air; said chambers are closed at their lower part by a plate 74 secured by crimping on the casing.

Plate 74 of the casing's lower part is also provided with holes 75 permitting air exhaust and with two ports to let through a fork 79.

On the upper part of the casing is adapted to pivot a disk the holes in which correspond, depending on the direction of the drive to be imparted to the pistons, to the chamber corresponding therewith.

On the lower part of the casing formed by the closing plate and inside the air-tight chambers, are provided two half-disks 77 and 78 controlled by fork 79, itself keyed on the spindle 80 which also controls the upper disk 76; these half-disks are each frictionally held by a spring 81 and are also provided with holes corresponding to the holes in the lower part of the casing on which they pivot.

When the pressure fluid admission holes corresponding to one of the chambers in casing 70 are uncovered by the disk, the exhaust half-disk of the same chamber closes the ex-

haust holes. The pressure fluid introduced into this chamber through the admission holes then goes to the cylinders through duct 82.

The piston drive is operated in the same manner as described with respect to the device shown in Figures 1 to 5 and so is the cam drive so that when the pistons are at end of travel the admission disk and the exhaust half-disk assume inverse positions.

The admission holes of the first chamber are closed while the exhaust holes are open, thus permitting the fluid to exhaust out.

At the same time the apertures of the second chamber have assumed their reverse position, that is to say the pressure fluid admission is open and the exhaust closed.

The pivoting motion of the distributor being repeated at each piston travel end, the admission and exhaust cycles are accomplished and every time they reach the end of travel the pistons are driven back to the opposite end of the cylinders.

I will now describe the device illustrated by Figures 10 and 11.

The supports of the stationary runners 8 carry, on each outer side, brakes composed of balls 90 influenced by springs 91 which are compressed by a screwed plug 92. Balls 90 are so arranged that part of their circumference bulges beyond the faces of supports 8.

The removable runners 93 carry on each side and at the spacing corresponding to the faces of the fixed supports 8 two corner pieces 94 in which are provided conical housings 95.

When the removable runners 93 are fitted on, and since the inner side of the two corner-pieces registers with the faces of the two fixed supports 8, the balls 90, as well as corner-pieces 94 pass over and sink into their housing so as to permit the two parts to fit on one another. These parts being once fitted on one another, balls 90 are pushed outwards by springs 91 and get jammed in the conical housings 95 and, owing to their pressure and to the form of the housings, keep the runners in position.

In order, therefore, to put the removable runners on the machine they have but to be properly set and then pressed on.

For removal the pressure is to be exerted in the opposite direction.

Where detachable runners are intended to carry sand paper or emery cloth, the mounting remains the same as previously described while the wedge tightening also serves to secure the paper or cloth on the runner.

The removable runners are, furthermore, provided with corner-pieces as above, permitting rapid mounting on the stationary runners of the machine.

The lubricating device, which will now be described, consists of a single pressure lubricator 96 mounted on a conduit having two orifices 97, 98. These orifices open on ball clack valves 99—100, which are constituted by seats 101—102 receiving balls 99—100 influenced by springs 103—104.

The effect of these valves is to prevent passage of air from one part of the machine to another and causing the latter to run out of proper operative order.

When grease is introduced into the pressure lubricator 96, it is forced by pressure through the duct, pushing balls 99, 100 away from their seats and being distributed through passages 105—106 to lubricate the parts concerned.

This device offers the advantage of permitting the machine to be lubricated while in operation, thereby effecting a better grease distribution to the various parts.

The dust-sucking device (Figures 11, 12, 13, 14) is composed of a shell 109 covering the base of the machine and leaving all round the runners sufficient clearance for the suction of dust produced by operation.

This shell is connected with a double intake piping 110 on each side of the machine, said piping being secured on a collector coupled to the hose of an ordinary exhauster.

The exhauster so connected with the machine draws, when once started, from inside shell 109. The air drawn by the exhauster blows on passing and takes along with it the dust produced by pumicing or other operation and discharges said dust either into the atmosphere or into a suitable separator.

I claim as my invention:

1. In a machine of the kind described, a frame, cylinders in tandem in said frame, double-acting pistons in each of said cylinders, means for controlling admission of pressure fluid to the cylinders and exhaust therefrom including two sets of valves, each set of valves comprising opposed valve heads carried by a common stem, valve seats traversed by the common stem and provided with ports and passages controlled by each valve head, a valve controlling the operation of the first-mentioned valves, a stem connected to the second-mentioned valve and extending through the frame, cams carried by each set of pistons, and a coacting cam member carried by the stem whereby the stem is actuated by said cams at each reciprocation of the pistons.

2. In a machine of the kind described, a frame, cylinders carried in said frame, pistons in said cylinders, sets of valves for controlling admission of pressure fluid to said cylinders and exhaust therefrom, each set of valves comprising opposed inlet and exhaust valve heads carried on a common stem, a valve seat between said valve heads, spring means urging each valve set in one direction, pressure fluid means urging each valve set in the opposite direction, means including a rotary valve for controlling said pressure fluid means, a seat for said rotary valve,

means for constantly urging said rotary valve on its seat, a stem attached to said rotary valve and extending vertically through said frame, slide members yieldingly maintained on said pistons, cam members carried by said pistons, and coacting elements on said valve stem adapted to be actuated by said cam members during each reciprocation of the pistons for rotating the valve.

In testimony whereof I affix my signature.

FERNAND PLANCQ.