(No Model.) 4 Sheets—Sheet 1.

M. KOCH.

QUILTING MACHINE.

No. 456,727. Patented July 28, 1891.

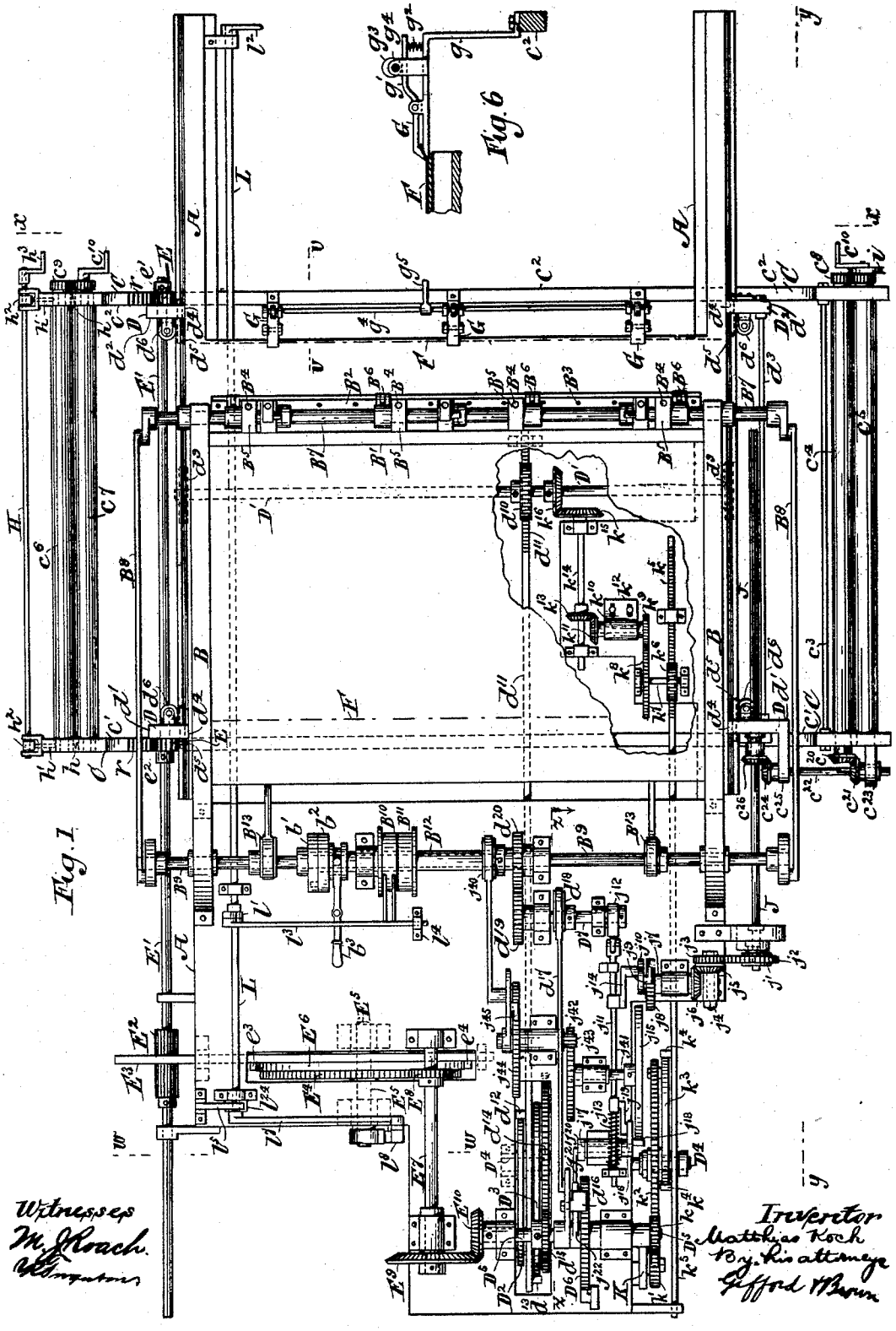

Witnesses
M. J. Roach.
[illegible]

Inventor
Matthias Koch
By his attorneys
Gifford Brown

THE NORRIS PETERS CO., PHOTO-LITHO., WASHINGTON, D. C.

(No Model.) 4 Sheets—Sheet 2.

M. KOCH.

QUILTING MACHINE.

No. 456,727. Patented July 28, 1891.

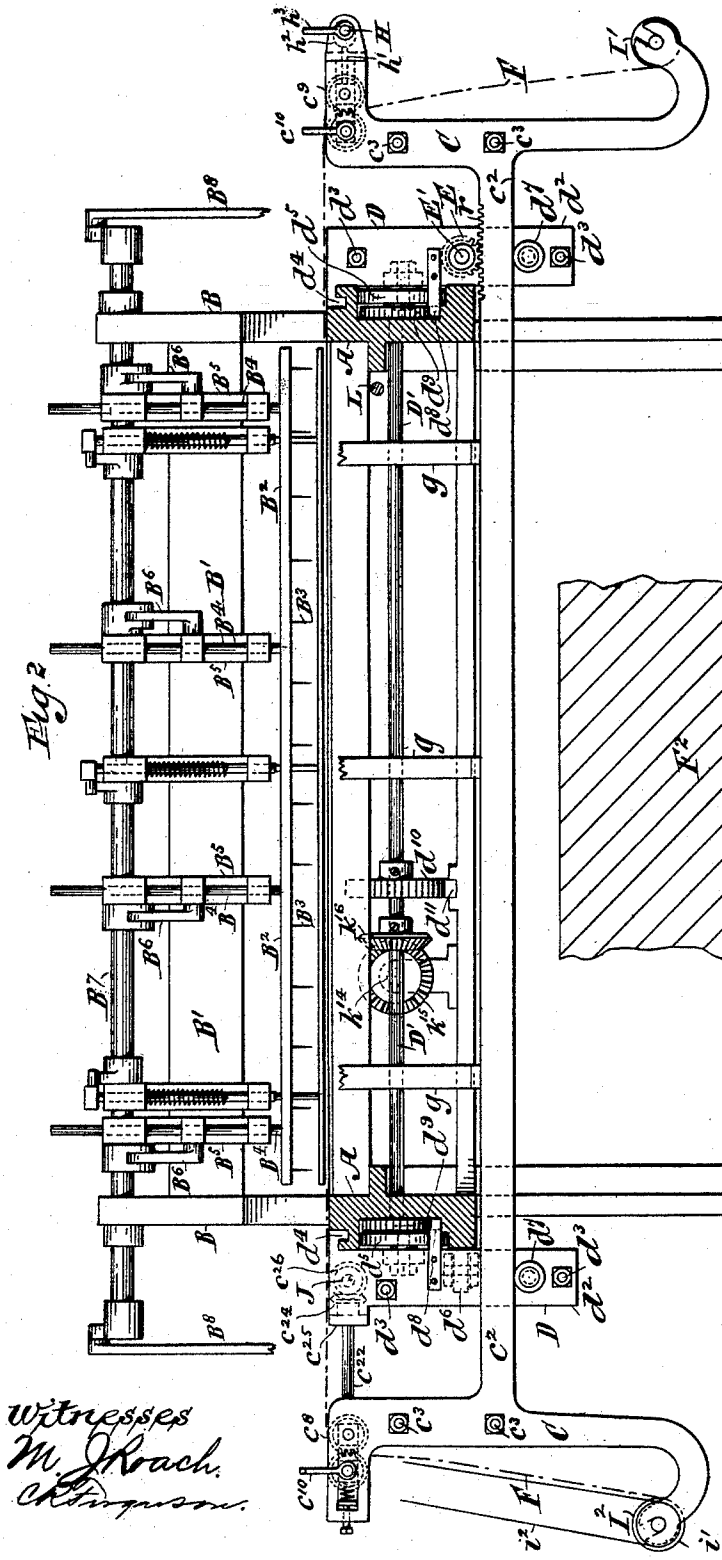

Fig. 2

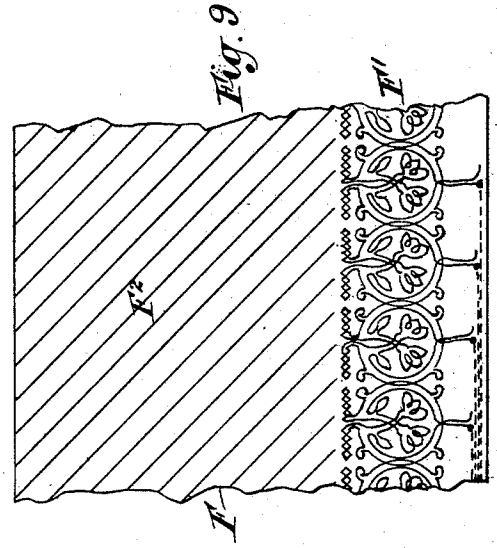

Fig. 9

Witnesses
M. J. Roach.
C. Simpson.

Inventor
Matthias Koch
by his attorneys
Gifford & Brown

THE NORRIS PETERS CO., PHOTO-LITHO., WASHINGTON, D. C.

(No Model.) 4 Sheets—Sheet 3.

M. KOCH.

QUILTING MACHINE.

No. 456,727. Patented July 28, 1891.

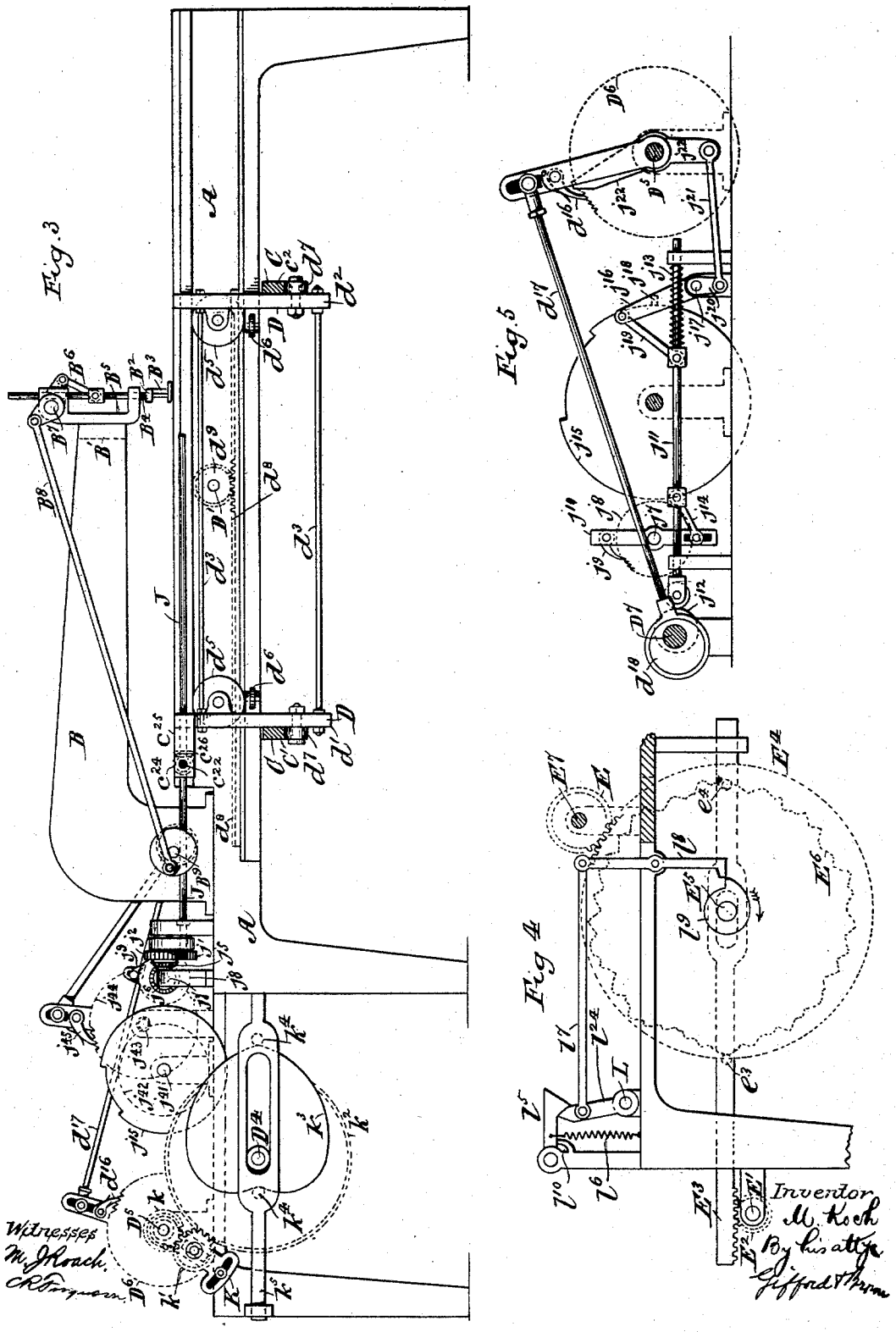

THE NORRIS PETERS CO., PHOTO-LITHO., WASHINGTON, D. C.

(No Model.) 4 Sheets—Sheet 4.

M. KOCH.

QUILTING MACHINE.

No. 456,727. Patented July 28, 1891.

Fig. 7.

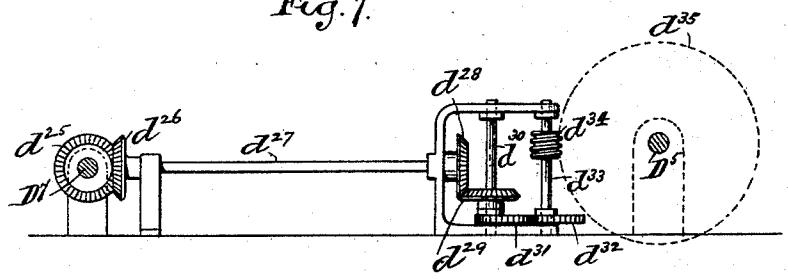

Fig. 8.

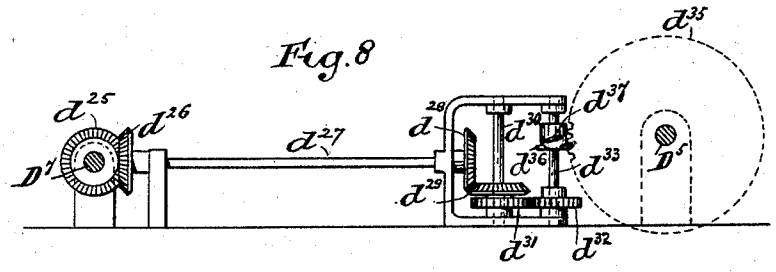

Witnesses
M. J. Roach.
C. E. Ferguson.

Inventor
Matthias Koch
By his attorneys
Gifford & Brown

THE NORRIS PETERS CO., PHOTO-LITHO., WASHINGTON, D. C.

UNITED STATES PATENT OFFICE.

MATTHIAS KOCH, OF NEW YORK, N. Y., ASSIGNOR, BY MESNE ASSIGNMENTS, TO THE EXCELSIOR QUILTING COMPANY, OF SAME PLACE.

QUILTING-MACHINE.

SPECIFICATION forming part of Letters Patent No. 456,727, dated July 28, 1891.

Application filed September 22, 1888. Serial No. 286,110. (No model.)

To all whom it may concern:

Be it known that I, MATTHIAS KOCH, of New York, in the county and State of New York, have invented a certain new and useful Improvement in Sewing-Machines, of which the following is a specification.

I will describe a sewing-machine embodying my improvement in detail, and then point out the various novel features in the claims.

In the accompanying drawings, Figure 1 is a plan or top view of the machine embodying my improvement, a certain support for the fabric being broken away to expose parts which otherwise would be concealed by it. Fig. 2 is a vertical section taken on the plane of the dotted line $x\,x$, Fig. 1, but made on a larger scale. Fig. 3 is a vertical section taken on the plane of the dotted line $y\,y$, Fig. 1. Fig. 4 is a vertical section taken on the plane of the dotted line $w\,w$, Fig. 1, but made on a larger scale. Fig. 5 is a vertical section taken as indicated by the dotted line $z\,z$, Fig. 1, but made on a larger scale and looking in the direction of the arrow at one end of said line. Fig. 6 is a vertical section taken as indicated by the dotted line $v\,v$, Fig. 1, but made on a larger scale. Fig. 7 is a vertical section showing certain mechanism which may be used instead of that used in Fig. 5. Fig. 8 is a vertical section showing certain mechanism which may be used instead of that used in Fig. 5. Fig. 9 is a view of a piece of fabric quilted.

Similar letters of reference designate corresponding parts in all the figures.

A designates the body or base-frame of the machine. It may be of any suitable construction. Two long arms B are mounted upon the base-frame, one at each side thereof. The free ends of these arms support an intermediate bar or stretcher B′ and carry the needles and their appurtenances.

B^2 designates the needle-bar; B^3, the needles, which may be of any suitable number, arranged in any desired manner. The needle-bar reciprocates vertically. It is provided with a number of shanks or rods B^4, extending upwardly through brackets B^5, secured to the bar or stretcher B′. These rods B^4 have secured to them collars, to which are pivotally connected links B^6, which are also pivotally connected to arms extending from a rock-shaft B^7, supported by the arms B. The rock-shaft B^7 is oscillated by means of rods B^8, pivotally connected to arms extending from the rock-shaft and to disks affixed to a rotary shaft B^9, supported by the arms B. The shaft B^9 is shown as constituting the driving-shaft of the machine, being provided with fast and loose pulleys B^{10} B^{11}. These pulleys are not, however, mounted directly upon the shaft, but upon a sleeve B^{12}, arranged upon the shaft and adapted to be interlocked therewith by means of a clutch, consisting of two parts b' b^2, one of which is affixed to the shaft and the other to the sleeve by means of a spline, so that while it may be moved longitudinally upon the sleeve, neither it nor the sleeve can have any independent rotation. A lever b^3, fulcrumed to a stationary part of the machine framing and having a bifurcate end provided with pins engaging with a groove in the hub of the part b^2 of the clutch, serves as a convenient means for adjusting the part b^2 of the clutch into or out of engagement with the part b' of the clutch. The parts b' b^2 may be constructed in any approved manner to engage. For instance, one may be provided with a pin or pins and the other with a corresponding hole or holes in the opposite faces.

Combined with the needles will be the usual appurtenances for controlling the threads, also any appropriate looping or shuttle mechanism. I have not deemed it necessary to show the details of all these parts. I may, however, remark that upon the shaft B^9 are affixed eccentrics B^{13}, which through suitable straps and rods transmit motion to the shuttle or looping mechanism.

In this example of my improvement it will be understood that the needles have no motion whatever save an up-and-down motion. In other words, as here represented, they do not move into different positions or travel over the fabric during the quilting.

The fabric to be quilted is sustained by a carriage C. This carriage consists of two side pieces c' c^2 and a number of intermediate bars or stretchers c^3. This carriage is provided with two pairs of rollers c^4 c^5 c^6 c^7. The fabric to be quilted passes between one

pair of these rollers and then through the other pair. The rollers c^4 c^5, constituting one pair, are geared together by gear-wheels c^8, and the rollers c^6 c^7, constituting the other pair, by gear-wheels c^9, affixed to their journals. It will be seen that one of each pair of rollers is furnished with a man-crank c^{10}. The carriage C is supported by a carriage D. The carriage D consists of side pieces d' d^2 and intermediate stretchers d^3. The side pieces d' of the carriage D may obviously be connected below the body or base-frame of the machine by cross-pieces or stretchers, and this is equally true of the side pieces d^2 of the carriage D. It will be seen that one portion of the carriage D is at each side of the base-frame of the machine. Each portion of the carriage D is provided with a hooked tongue d^4, engaging with the adjacent side piece of the base-frame. Each portion of the carriage D is also provided with two wheels or pulleys d^5, which travel along ledges or tracks provided on the sides of the base-frame. Each portion of the carriage is also provided with wheels or pulleys d^6, bearing against the sides of the base-frame. The carriage D travels in the direction of the length of the arms B.

The carriage D is provided with rollers d^7, upon which are supported the side pieces c' c^2 of the carriage C. The carriage C will be moved with the carriage D in the direction of the length of the arms B and transversely to the length of the needle-bar; but it can also have a motion independently of the carriage D in a direction transverse to the length of the arms B and parallel with the length of the needle-bar.

It will be readily understood that by reason of the fact that the fabric is supported by the carriage C the fabric will be capable of movement in any desired direction in a horizontal plane beneath the needles.

I have now described the underlying principle of the machine. It is well known in the state of the art that the needles may be supported by a carriage, so as to travel over the fabric, instead of supporting the fabric upon a carriage, so as to have universal motion in one plane. It now remains to describe the mechanism for imparting motion to the two carriages and for imparting motion to the rollers with which the carriage C is provided.

I will first explain the means for imparting motion to the carriage D. Each portion of the carriage D has affixed to it a toothed rack d^8, extending in the direction of the length of the arms B. With the racks d^8 gear-wheels d^9 engage. These gear-wheels d^9 are mounted upon a shaft D', supported by the base-frame of the machine. By rotating the shaft D' in the desired manner the requisite movement of the carriage D will be secured. The shaft D' has affixed to it a gear-wheel d^{10}. Engaging with the gear-wheel d^{10} is a rack d^{11}, which reciprocates horizontally and in the direction of the length of the arms B. This rack serves as a means for transmitting motion to the shaft D'. The rack d^{11} in effect constitutes a rod. Said rod is provided with pins d^{12} d^{13}, which coact with two rotary pattern-cams D^2 D^3, affixed to a rotary shaft D^4. The shaft D^4 derives its motion through a large gear-wheel d^{14}, affixed to it and engaging with a small gear-wheel d^{15}, which is mounted upon a shaft D^5. The shaft D^5 has a ratchet-wheel D^6 secured to it. A pawl d^{16} engages with the ratchet-wheel and is carried by an oscillating arm loosely mounted upon the shaft D^5. This arm is oscillated by a rod d^{17}, worked by an eccentric d^{18}, affixed to a shaft D^7. The shaft D^7 receives a non-intermittent rotation by means of gear-wheels d^{19} d^{20}, affixed one to it and the other to the sleeve B^{12}. The pattern-wheels D^2 D^3 are so shaped as to impart to the carriage D the requisite motion for any particular pattern. These pattern-wheels may be changed for others when different patterns are desired.

I will now explain the mechanism for imparting motion to the carriage C independently of the motion which is transmitted to the carriage D. The side pieces c' c^2 are provided with toothed racks r, which engage with pinions E, affixed to a shaft E'. This shaft is journaled in fixed portions of the machine-frame and is provided with a long gear-wheel E^2, rigidly secured to rotate with it. With the gear-wheel E^2 a toothed rack-bar E^3 engages. This rack-bar reciprocates in a direction transverse to the length of the arms B, and by reciprocating imparts a rotary movement to the shaft E in one direction or the other, as may be necessary for the production of any desired pattern. Although the shaft E' is supported in bearings arranged upon the fixed portion of the machine-frame, it is capable of a sliding movement in the direction of its length, so that it may move with the carriage C in the direction of the length of the arms B. This is necessary in order that its pinions E may maintain engagement with the racks r of the carriage. The pinions have collars, which are fastened by set-screws or otherwise to the shaft. These pinions bear one against the outside of each of two projections with which the carriage D is provided. When this carriage D is moved, it transmits longitudinal movement to the shaft E' by its bearings against the pinions. The rack-bar E^3 is operated by a gear-wheel E^4, affixed to a shaft E^5, mounted in bearings in the fixed portion of the machine-frame. This gear-wheel and its shaft rotate always in one direction.

E^6 designates a pattern-wheel affixed to the shaft E^5, so as to rotate therewith. The rack-bar E^3 is provided with two pins e^3 e^4, which bear against the periphery of the pattern-wheel E^6. The pattern-wheel is thus enabled to reciprocate the rack-bar and transmit motion in reverse direction transversely to the length of the arms B to the carriage C. The shaft E^5 derives motion from a shaft E^7, the latter

being provided with a gear-wheel E^8, which engages with the gear-wheel E^4. The shaft E^7 is also provided with a bevel gear-wheel E^9, that engages with a bevel gear-wheel E^{10}, affixed to the shaft D^5. The shaft E^7 thus derives motion from the shaft D^5. As the shaft D^5 derives motion from the ratchet D^6 and pawl d^{16}, it operates intermittingly. Its intermittent motion being transmitted to the carriage C and carriage D, these carriages, as well as the needles, operate with an intermittent movement.

I will now describe a modification of the mechanism for producing the intermittent motion of the carriages C and D. This mechanism may be substituted for the ratchet D^6 and pawl d^{16} and the appurtenances of these parts. This modified mechanism is shown in Fig. 7. The shaft D^7, instead of having an eccentric and eccentric-rod combined with it for operating the pawl d^{16}, is provided with a bevel gear-wheel d^{25}, which meshes into and drives a bevel-wheel d^{26}, affixed to a shaft d^{27}. This shaft also has affixed to it a bevel gear-wheel d^{28}, which engages with a bevel gear-wheel d^{29}, affixed to a shaft d^{30}. The shaft d^{30} has affixed to it an eccentric gear-wheel d^{31}. This engages with another eccentric gear-wheel d^{32}, affixed to a shaft d^{33}. The shaft d^{33} has affixed to it a worm d^{34}. This worm meshes into a worm-wheel d^{35}, affixed to the shaft D^5. The eccentric gears d^{31} d^{32} produce a substantially intermittent motion of the shaft D^5.

In Fig. 8 I have shown a mechanism exactly like that illustrated in Fig. 7, excepting only that the gears d^{31} d^{32} are not eccentric, but are circular gears, and the shaft d^{33} has substituted for the worm d^{34} a thread d^{36}, which is horizontal throughout, but interrupted at one point in its circumference, and an inclined segment of thread d^{37}, which is opposite the interruption in the thread d^{36}. These threads d^{36} d^{37} engage with the teeth of the worm-wheel d^{35} on the shaft D^5. The thread d^{36} locks the worm-wheel d^{35} against rotation, except when its interruption comes opposite said wheel. At this time the thread-segment d^{37} engages with the worm-wheel and moves it one tooth forward, after which the thread d^{36} again engages with the worm-wheel and locks it.

I have now described the general characteristics of the machine. To conduce to a clear understanding, I will add that the dotted line F designates the fabric. The fabric is held during the sewing by the feed-rollers c^4 c^5 c^6 c^7. I have also provided clips G for holding that edge of the fabric which is nearest the needles. These clips may be readily understood by reference to Fig. 6. They comprise, severally, bars g, mounted upon the side piece c^2 of the carriage C and extending thence upwardly and thence horizontally toward the needle-bar. Each bar g has pivotally connected to it a lever g'. The lever g' is above the horizontal portion of the bar g and is pivoted or fulcrumed between its ends. The end which is the nearer to the needle-bar coacts with the adjacent end of the bar g to grip the edge of the fabric. The other end and the corresponding extremity of the horizontal portion of the bar g have interposed between them a spring g^2. This spring forces upwardly the end of the lever g', upon which it acts, and thereby causes the other end of the lever to grip the fabric. An eccentric g^3 is affixed to a shaft g^4, so as to be capable of acting upon that arm or end of the lever upon which the spring g^2 acts. By rotating the shaft g^4 in one direction the eccentric g^3 will be made to permit the spring g^2 to act. By rotating the shaft g^4 reversely the lever g may be oscillated so as to release the fabric. The shaft g^4 is common to the eccentrics of all the clips G and is provided with a handle g^5, by which it may be conveniently oscillated to operate all the clips.

The machine as described is intended for working the fancy pattern F′ which is represented in Fig. 9, and not for performing the diagonal lines of stitching F^2 shown in said figure. During the quilting of the fancy pattern F′ the feed-rollers are motionless. After the fancy pattern shall have been quilted upon such portion of the fabric as extends between the pair of feed-rollers c^4 c^5 and the other pair of feed-rollers c^6 c^7 one pair of feed-rollers will be rotated to feed this finished portion of the fabric along and present another portion of the fabric between the two pairs of rollers, in order that it may be quilted with a continuation of the same fancy pattern. This motion of the feed-rollers may be produced by means of a hand-crank c^{10}. One of the feed-rollers of each pair may be forced toward the other to maintain a grip upon the fabric. I have shown that I may combine with a pair of feed-rollers means whereby they may be forced into contact with any desired pressure. This may be understood by reference to Figs. 1 and 2. I have shown these means combined with the rollers c^6 c^7. These rollers are journaled in sliding boxes fitted in horizontally-extending grooves or housings formed in the side pieces c' c^2 of the carriage C. Between the boxes supporting the two rollers springs h are arranged. These springs tend to force the rollers c^6 away from the roller c^7. The boxes of the rollers c^6 have combined with them pins h', which are capable of sliding lengthwise of the side pieces c' c^2 of the carriage. The outer ends of these pins h' impinge against eccentrics h^2, mounted upon a shaft H. This shaft has affixed to one end a hand-crank h^3. By rotating the shaft H the eccentrics h^2 may be made to force the rollers c^6 against or toward the rollers c^7 with any desired pressure.

I have shown the carriage C as provided with rollers I' I^2. The fabric to be quilted may be wound upon one of these rollers and taken up by the other after passing through the two pairs of feed-rollers and beneath the needle-bar. I have shown that the roller I^2,

which is illustrated as serving as a take-up roller, may be rotated from the roller c^5 through the agency of a pulley i, affixed to the roller c^5, a pulley i', affixed to said roller I^2, and a belt i^2. It will be seen that the roller c^4 has affixed to it at one end a bevel gear-wheel c^{20}, which engages a bevel gear-wheel c^{21}, affixed to a shaft c^{22}. The bevel-gear c^{21} is secured to rotate with the shaft c^{22} by means of a spline or feather; but the bevel-wheel c^{21} is capable of sliding lengthwise of the said shaft c^{22}. The bevel-wheel c^{21} is fitted in a bearing c^{23}, which is a fixture on the carriage C. This connection of the bevel gear-wheel c^{21} with the shaft c^{22} affords provision for the movement of the carriage C, and yet enables the shaft c^{22} to transmit rotary motion to the roller c^4. The shaft c^{22} has rigidly affixed to one end a bevel gear-wheel c^{24}, and the shaft is secured in a bearing c^{25} on one of the portions of the carriage D. This gear-wheel and its shaft therefore move with the carriages C and D in the direction of the length of the arms B, but do not partake of the movement of the carriage C in a direction transverse of the length of the arms B. The bevel-wheel c^{24} engages with a bevel gear-wheel c^{26}, arranged upon a shaft J, which is journaled in the fixed portion of the machine-frame. The bevel-wheel c^{26} is secured to rotate with the shaft J by means of a spline or feather. The bevel-wheel c^{26} is supported in a bearing in one of the portions of the carriage D, and hence when this carriage moves this bevel-wheel is moved with it lengthwise of the shaft J. Obviously the shaft J, although stationary, is thus enabled to transmit rotary motion to the bevel-wheel c^{26} and thence to the roller c^4. The shaft J has affixed to one end a gear-wheel j', which engages with a gear-wheel j^2. This wheel j^2 is mounted upon a stud, which is supported in a swinging arm, the latter being loosely supported upon the shaft J. This swinging arm is similar to an arm K, (represented in Fig. 3,) and hence its construction may be readily understood by reference to the arm K and the appurtenances of the latter. The gear-wheel j^2 engages with a gear-wheel j^3, affixed to a shaft j^4. The object of supporting the gear-wheel j^2 upon the arm is to enable it to be substituted by a gear-wheel of larger or smaller size and still preserve the transmissibility of motion from the gear-wheel j^3 to the gear-wheel j'. The gear-wheel j^3 has affixed to it a bevel-gear j^5, which engages with a bevel gear-wheel j^6, affixed to a shaft j^7. The shaft j^7 has affixed to it a ratchet-wheel j^8. A pawl j^9 coacts with this ratchet-wheel. The pawl j^9 is carried by a lever j^{10}, which is hung loosely upon the shaft j^7. This lever is oscillated by means of a rod j^{11}, which is moved longitudinally in one direction by an eccentric or cam j^{12} and in the other direction by a spring j^{13}. The cam or eccentric j^{12} is affixed to and rotates with the shaft D^7. The rod j^{11} is connected to the lever j^{10} by means of a link j^{14}. The link j^{14} has an adjustable connection with the lever by means of a bolt passing through said link and into a slot extending lengthwise of the lever. The rod j^{11} is not free at all times to move forward under the influence of the spring j^{13} to follow the receding periphery of the eccentric or cam j^{12}, as it is controlled in the forward movement by a pattern-wheel j^{15}. The pattern-wheel is of circular form, but has at one point in its periphery a long notch. The time of the rotation of this pattern-wheel is such that the fancy pattern F′ (shown in Fig. 9) will be worked by the time the pattern-wheel has traveled from one end of the unnotched portion of its periphery to the other end of the unnotched portion of its periphery. An arm j^{16}, affixed to a shaft j^{17}, supported in a stand, is provided with a pin j^{18}, which bears against the periphery of the pattern-wheel j^{15}. The arm j^{16} is connected by a link j^{19} to the rod j^{11}. While the pin j^{18} of the arm j^{16} bears against the unnotched portion of the periphery of the pattern-wheel j^{15} the fancy pattern is being worked. By the time the notched portion of the pattern-wheel j^{15} comes opposite the pin j^{18} the fancy pattern has been completed. While the notched portion of the pattern-wheel is passing the pin j^{18}, and only during this time, the rod j^{11} is free to follow the eccentric j^{12}. During this period no pattern is being worked and the feed-rollers c^4 c^5 are automatically rotated through the agency of the pawl j^9 and ratchet j^8 to move the fabric forward far enough to present a new surface for the fancy pattern to be worked upon. While the fabric is being thus fed to present a new surface to be worked upon certain lines of straight stitching parallel with one edge of the fabric are produced, which is preferable to cutting the threads of the needles. These lines are not, however, intended to form any part of the pattern, but may be removed by trimming the fabric.

The pattern-wheel j^{15} not only serves to effect the rotation of the feed-rollers c^4 c^5 at the proper time, but it has the additional function of stopping the rotation of the shaft D^5, whereby the carriages C and D are moved. I will now explain how this is done. The shaft j^{17} has affixed to it an arm j^{20}. A link j^{21} connects this arm with a lever j^{22}, which is hung loosely upon the shaft D^5. It will be readily understood that when the notched portion of the pattern-wheel j^{15} is opposite the pin j^{18} of the arm j^{16} and the eccentric j^{12} and spring j^{13} are permitted to reciprocate the rod j^{11} the lever j^{22} will simultaneously be oscillated, and its upper end, being in proximity to the pawl d^{16}, will throw this pawl out of engagement with the ratchet-wheel D^6.

The rotation of the pattern-wheel j^{15} will now be explained. It is affixed to a shaft j^{41}. This shaft has affixed to it a gear-wheel j^{42}. A pinion j^{43} engages with the gear-wheel j^{42}. This pinion is affixed to a shaft, which has also affixed to it a ratchet-wheel j^{44}. The

ratchet-wheel j^{44} is driven by a pawl j^{45}, affixed to an arm, which is oscillated by an eccentric j^{40}, which is affixed to the sleeve B^{12}, that is arranged upon the shaft B^9.

I will now describe a stop-motion. L designates a rock-shaft provided with handles l' l^2, whereby it may be conveniently rocked. The rod l^3 is pivotally connected to the handle l' at one end and supported at the other end in a guide l^4. This rod is provided with forks and constitutes a belt-shifter, whereby the main driving-belt may be carried from one to the other of the fast and loose pulleys B^{10} B^{11}.

I will now describe how the shaft L may be oscillated automatically to operate the belt-shifter rod l^3. The shaft L has affixed to it an arm l^{24}, which is shown as having a V-shaped upper portion that may be engaged by a pawl or dog l^5, pivoted at one end to a fixed portion of the machine-frame and drawn downwardly by a spring l^6. This arm l^{24} has connected to it a link l^7, which is also pivotally connected to a lever l^8, which is fulcrumed between its ends to the fixed portion of the machine-frame and is shown as having a bent or offset portion at the lower end. The shaft E^5 is shown as having affixed to it a disk or wheel l^9, provided with a toe or projection similar to a ratchet-tooth. When the shaft E^5 nearly completes a rotation, the projection from the disk l^9 will oscillate the lever l^8, so as to cause it to oscillate the arm l^{24} toward the spring l^6, actuating the pawl l^5. Finally the projection of the disk l^9 swings the arm l^{24} so far over that the V-shaped under side of the pawl l^5 acts in conjunction with the V-shaped upper end of the said arm l^{24} to throw the arm l^{24} quickly over toward the spring l^6. This will effect the oscillation or rocking of the shaft L to such a degree as to cause the shifting of the belt from one to the other of the fast and loose pulleys B^{10} B^{11}. This occurs at the time that the fancy pattern is completed on any one portion of the fabric, and the fabric in consequence thereof requires to be removed to present a new surface. The pawl l^5 of course is provided with a stop—such, for instance, as a pin l^{10}—to prevent it from being pulled too far downwardly by the spring l^6 when not supported by the arm l^{24}.

When the fabric is fed so as to cause the stitching of the straight lines near one edge of the fabric, the mechanism for imparting motion to the carriages is rendered inoperative. This is done by loosening certain gears, as will hereinafter be explained.

I will now describe how the machine may be disorganized for quilting a fancy pattern, such as the pattern F′, Fig. 9, and organized to quilt diagonal lines F^2, Fig. 9. The gear-wheel d^{15} is disengaged from the shaft D^5 in the present instance by loosening a screw, which secures its hub to the shaft. This change prevents the shaft D^5 from transmitting motion to the carriage D through the rack-bar d^{11}, gear-wheel d^{10}, shaft D′, and gear-wheel d^9. The gear-wheel d^{10} is now loosened by disengaging the screw which secures it to the shaft D′. This change leaves the shaft D′ free to rotate under the control of other mechanism. The pattern-wheel j^{15}, when adjusted so that its notched portion will be opposite the pin j^{18}, is disengaged from the mechanism which imparts motion to it by loosening the eccentric j^{40} from the sleeve B^{12}, which is arranged upon the shaft B^9. This may be done by loosening the screw, which in the present instance passes through the hub of the said eccentric and secures it to said sleeve. Thus the pattern-wheel j^{15} will be made to remain idle, with its notched portion opposite the pin j^{18}. The eccentric j^{12} and the spring j^{13} will therefore be left free to effect the rotation of the feed-rollers c^4 c^5. The gear-wheel E^8 is also disengaged from the shaft E^7 in the present instance by slackening a screw which passes through the hub of said gear-wheel and impinges upon the said shaft. This change prevents the shaft D^5 from transmitting motion to the carriage C through the pattern-wheel E^6, rack-bar E^3, shaft E′, pinions E, and the racks r, arranged upon said carriage. For the diagonal lines of stitching the carriage C has no motion imparted to it independently of the carriage D, but is, in effect, a part of the carriage D for the time. The carriage D is now operated by a different mechanism, deriving motion from the shaft D^5. In this mechanism there is a gear-wheel k, affixed to one end of the shaft D^5 and engaging with a gear-wheel k', which is supported upon a stud projecting from the arm K. The arm K is hung at the upper end upon the shaft D^5. Its stud, which supports the gear-wheel k', fits in a slot extending lengthwise of said arm. The stud may therefore be adjusted lengthwise of said arm and toward and from the gear-wheel k. The arm K at the lower end has in it an arc-shaped slot, which is concentric with the axis of the shaft D^5. A bolt fastened to the fixed portion of the machine-frame extends through this arc-shaped slot and serves to secure the arm K in different positions. The gear-wheel k' engages with a gear-wheel k^2. The object of the arm K is to provide for the substitution of a change-gear, or, in other words, a gear of a different size, instead of the gear k', to vary the speed of the motion, which will be transmitted to the gear-wheel k^2. The gear-wheel k^2 is mounted loosely upon the shaft D^4. A pattern-wheel or cam k^3 is also loosely mounted upon this shaft. This pattern-wheel and the gear-wheel k^2 are secured upon a sleeve common to both, or otherwise secured to rotate in unison independently of the shaft D^4. The pattern-wheel k^3 operates in connection with two pins k^4, extending across opposite points in its periphery from a rod k^5. The pattern-wheel k^3 thus imparts a reciprocating motion to the rod k^5. The rod k^5 is constructed at one end to form a rack-bar, which engages with a gear-wheel k^6,

affixed to a shaft k^7. The shaft k^7 has also affixed to it a gear-wheel k^8. This gear-wheel k^8 engages with a gear-wheel k^9. The gear-wheel k^9 is affixed to a shaft k^{10}, having secured to it at one end a beveled gear-wheel k^{11}. The shaft k^{10} is supported in a movable bracket k^{12}. This bracket is secured to a fixed portion of the machine-frame by means of screws or bolts passing through slots extending transversely to the length of said shaft. This enables change-gear to be employed, as the gear k^9 may be shifted and replaced by another upon the shaft k^{10}. The bevel-wheel k^{11} engages with a bevel-gear k^{13}, affixed to a shaft k^{14}. When the bracket k^{12} is adjusted into a different position, the bevel-wheel k^{13} may be adjusted lengthwise of the shaft k^{14} and secured in a different position. The shaft k^{14} has affixed to one end a bevel-wheel k^{15}, which engages with a bevel-wheel k^{16}, affixed to the shaft D'. As the shaft D' transmits motion to the carriage D through the gear-wheel d^9, with which said shaft is provided, and the racks d^8, with which said carriage is provided, it is obvious that the shaft D^5 now transmits a reciprocating motion to the carriage D under the control of the pattern-wheel or cam k^3.

When the machine is organized as just described, the carriage D and the carriage C with it will be moved in the direction of the length of the arms B under control of the pattern-wheel k^3, and the feed-rollers c^4 c^5 will simultaneously be rotated through the agency of the pawl j^9 and ratchet-wheel j^8. The result of the combined movements imparted to the fabric by the rotation of these feed-rollers and the movement of the carriages in the direction of the length of the arms B will be an oblique movement of the fabric beneath the needles. Oblique lines of stitching, such as those F^2 in Fig. 9, will therefore be sewed or quilted upon the fabric.

What I claim as my invention, and desire to secure by Letters Patent, is—

1. In a quilting-machine, the combination, with the fixed framing, of a carriage D, consisting of two sections severally provided with hooks d^4, engaging grooves in the fixed framing, and wheels d^5, traveling on ledges or tracks on the sides of the frame, and wheels d^6, bearing against the sides of the frame, substantially as specified.

2. In a quilting-machine, the combination of a pair of feed-rollers for sustaining the fabric to be quilted, eccentrics for regulating the pressure between the feed-rollers, a shaft carrying such eccentrics, and springs arranged between said rollers, and pins extending between the eccentrics and one of the rollers, substantially as specified.

3. In a quilting-machine, the combination of a pair of feed-rollers for sustaining the fabric to be quilted, springs between said rollers, eccentrics for regulating the pressure between the feed-rollers, sliding pins extending between the eccentrics and the journal-boxes of one of the rollers, and a shaft common to both eccentrics, substantially as specified.

4. In a quilting-machine, the combination of a carriage for supporting the fabric to be quilted, and grippers serving to hold one edge of the fabric and consisting of bars secured to the carriage, levers fulcrumed to the bars, springs for operating the levers in one direction, an eccentric-shaft common to all the grippers, and eccentrics on said shaft for moving the levers in the reverse direction, all substantially as specified.

5. In a quilting-machine, the combination of a reciprocating needle-bar carrying a series of needles, carriages arranged beneath the needle-bar, one of which is supported by the other and sustains the work, pattern-wheels for each of the carriages, the work-sustaining carriage being provided with rollers extending transversely to the length of the series of needles, and independent gearing for moving each of the carriages, substantially as specified.

6. In a quilting-machine, the combination of a reciprocating needle-bar carrying a series of needles, a work-supporting carriage supported upon another carriage and having rollers extending transversely to the length of the series of needles, of a pattern-wheel and rack and pinion for imparting motion to the work-supporting carriage independently of the other carriage in the direction of the length of the series of needles, a track parallel with the needle-bar, a pattern-wheel and rack and gear-wheel for imparting motion to the other carriage in a direction transverse to the length of the series of needles, and gearing for imparting motion to the feed-rollers, the various gearings being independently inoperative, substantially as specified.

7. In a quilting-machine, the combination of a reciprocating needle-bar, a work-supporting carriage, another carriage for sustaining the work-supporting carriage, gearing comprising a pattern-wheel for imparting motion to the work-supporting carriage in the direction of the length of the needle-bar on a track parallel with said needle-bar, a cam carried by the shaft upon which said pattern-wheel is mounted, a belt-shifter, a rock-shaft, as L, connected with the belt-shifter and operated by the cam which is carried by the shaft of the pattern-wheel, substantially as specified.

8. In a quilting-machine, the combination of a reciprocating needle-bar, a work-supporting carriage, gearing comprising a pattern-wheel E^6 for imparting motion to the said carriage, a cam l^9, carried by the shaft of this pattern-wheel, a lever l^8, operated by said cam, a rock-shaft L, provided with an arm l^{24} and connected to the said lever, a pawl or dog l^5, operating in conjunction with said arm l^{24}, and a belt-shifter connected with the rock-shaft L, substantially as specified.

9. In a quilting-machine, the combination

of a reciprocating needle-bar, a carriage for supporting the work, feed-rollers arranged upon said carriage, gearing driven by a shaft D^5 for imparting motion to said carriage in the direction of the length of the needle-bar, a carriage or carriages for sustaining the work-supporting carriage, gearing driven by said shaft D^5 for imparting motion to the same transversely to the length of the needle-bar, a ratchet-wheel on said shaft D^5, a pawl d^{16}, coacting with the ratchet-wheel, a lever j^{22}, a rock-shaft j^{17}, provided with an arm connected to said lever j^{22} and provided with another arm, a sliding rod j^{11}, connected with the latter arm, a spring and eccentric for operating said rod, and a notched wheel j^{15} for controlling the operation of the eccentric and spring, substantially as specified.

10. In a quilting-machine, the combination of a reciprocating needle-bar, a work-supporting carriage, a carriage for sustaining the work-supporting carriage, gearings comprising pattern-wheels for imparting motion to each of the carriages, feed-rollers on the work-supporting carriage, gearing comprising a pattern-wheel for imparting motion to said feed-rollers, and a notched wheel j^{15}, controlling the operation of the gearing imparting motion to the carriages and the gearing imparting motion to the feed-rollers and rendering them independently operative, substantially as specified.

11. In a quilting-machine, the combination of a reciprocating needle-bar, a carriage moving transversely to the length of the needle-bar, gearing comprising a rack and pinion for imparting motion to said carriage and comprising a pattern-wheel D^3, other gearing comprising a rack and pinion for independently imparting motion to said carriage, and also comprising a pattern-wheel k^3, either of the two sets of gearing being rendered operative and the other inoperative by loosening or fastening eccentric gears, substantially as specified.

MATTHIAS KOCH.

Witnesses:
EDWIN H. BROWN,
JAMES D. GRISWOLD.