Jan. 18, 1955 J. S. LUCE 2,700,107

ION SOURCE

Filed Jan. 10, 1950

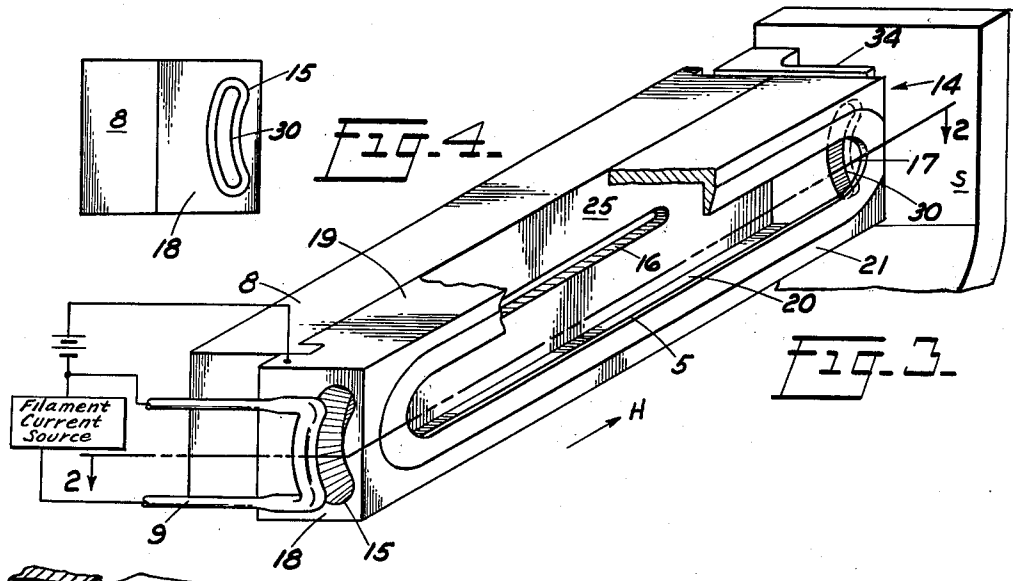

Fig. 4.

Fig. 3.



Fig. 1.

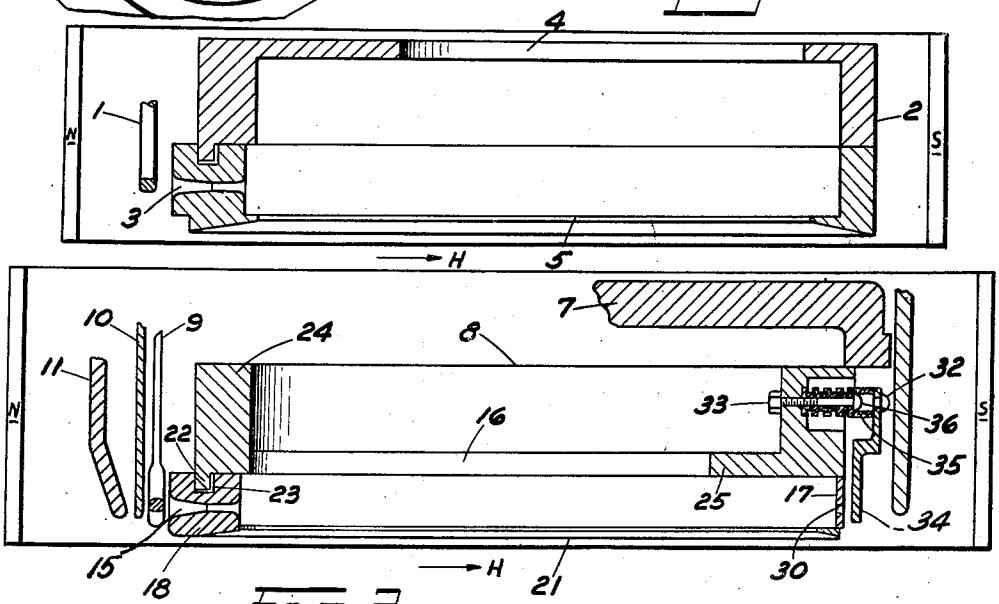

Fig. 2.

INVENTOR.
John S. Luce
BY
Roland A. Anderson
ATTORNEY

United States Patent Office 2,700,107 Patented Jan. 18, 1955

2,700,107

ION SOURCE

John S. Luce, Oak Ridge, Tenn., assignor, by mesne assignments, to the United States of America as represented by the United States Atomic Energy Commission

Application January 10, 1950, Serial No. 137,714

4 Claims. (Cl. 250—41.9)

The present invention relates to ion sources, and especially to an improved arc chamber for utilization in mass spectrometers, isotope separators, and the like.

Mass spectrometers and spectrographs are well-known in the art. See, for example, "The Particles of Modern Physics," J. D. Stranathan, The Blakiston Company, pages 154–211. An isotope separator commonly called a calutron, is discussed in "Atomic Energy for Military Purposes," H. D. Smyth, Princeton University Press, 1946, pp. 187–205. For a description of use of the calutron in the concentration of stable isotopes, see "Chemical and Engineering News" 25, 2624–5 (1947), and "The Production of Stable Isotopes and Their Uses in Research," AECD–2436 (November 18, 1948). In such apparatus, ions are produced in an arc chamber by bombarding vaporized atoms with electrons from a heated filament. The resulting positive ions are accelerated out of the chamber by an electrical potential, are bent through an arc by a magnetic field at right angles to the electric field, and are collected at a target member, or receiver.

The efficiency of such devices is greatly influenced by the design of the arc chamber wherein the ions are generated. Since the ion collection at the target obviously can be no greater than the ion production at the source, it is apparent that the efficiency of the source in ionizing the charge material is a criterion of first importance in the operation of this class of devices. Likewise of prime importance is the prevention of recombination of the ions with electrons to form a neutral atom, for only charged atoms are focussed onto the target by the apparatus. Each recombined atom is either ionized a second time or lost as a neutral gas molecule before it enters the ion beam; hence, it can be seen that each recombination lowers the efficiency of the apparatus.

Ion sources of varied design are known to the art. Generally, they comprise a chamber to contain the gas or vapor charge, an inlet passage for admitting the charge material, a filament for emitting electrons, a collimating slot maintained at a potential more positive than the filament for accelerating the electrons across the chamber and defining the beam, an ion exit passage, and slits aligned therewith for accelerating positive ions out of the chamber. A typical mass spectrometer source is illustrated in "Review of Scientific Instruments" 11, 213. While sources of these conventional types have proved adequate for many applications, their efficiency has been uniformly poor; that is, the number of positive ions leaving the chamber is substantially less than the number of atoms of charge material admitted per unit time. This low efficiency is evidenced by a high rate of charge consumption, and excessive rate of deposit of ions and neutralized ions upon the walls and accelerating slits, the last named result causing sparking, arcing over, and often complete failure of operation of the apparatus.

It is apparent that in equipment for separating macroscopic quantities of certain isotopes, where the charge material is very costly, and separation rate, or output, is of prime importance, an improvement which results in increased efficiency of the source is greatly to be desired.

Accordingly, it is a primary object of my invention to provide an ion source so designed as to increase the efficiency of mass separators, mass spectrographs, and the like.

Another object of my invention is to provide an improved ion source characterized by a beam of oscillating electrons so designed as to obtain greater ionizing efficiency of the charge material therein and to decrease the rate

of deposit of ions and molecules on the walls of the source.

A further object of my invention is to provide an ion source wherein recombination of ions is substantially reduced by means of a special electron drain arrangement.

Yet another object of my invention is to provide an arc chamber of such design as to support and maintain a more uniform arc.

Other objects and advantages of my invention will become apparent from the following detailed description of a preferred embodiment thereof, when read in conjunction with the accompanying drawings, in which:

Fig. 1 is a sectional view of an ion source known in the prior art;

Fig. 2 is a sectional view of my improved ion source;

Fig. 3 is a fragmental perspective view of an embodiment of my improved source; and

Fig. 4 is an end view of my improved source showing a preferred alignment of the two defining slots therein.

Referring now to Fig. 1, a horseshoe-shaped tantalum cathode **1** is mounted a short distance from a graphite box **2**, defining an arc chamber, which serves as an anode. A small defining slot **3** cut in the chamber wall opposite the cathode **1** permits electrons to enter the chamber and move within a beam defined by the slot **3** along the length of the chamber. A slot **4** is cut in the back wall of box **2**, from a point near the chamber wall opposite the defining slot **3** to a point substantially ¼ the length of the chamber from the defining slot, to admit the vaporized charge material, contained in a charge bottle mounted in an oven adjacent the arc chamber. An opening **5** is provided in the front of the box **2**, extending substantially the full length of the chamber to permit ions to escape from the chamber. The chamber may, for example, be 8″ long, 1¼″ wide, and 1½″ deep, while the slit **5** may be 7/16″ wide and 7½″ long.

As shown in Fig. 2, one embodiment of my improved ion source includes a horseshoe-shaped cathode **9**, which may be formed from tantalum wire .17 inch in diameter, and which may be connected to a current source of 200–400 amperes to heat the wire to a temperature of approximately 2000° C. in the manner of operation known to the art. Shield **10** prevents escape of electrons given off by the filament, and tends to focus the electrons back toward the arc chamber in a manner known to the art. Shield **11** is a conventional thermal shield, and also prevents arcing from ground to filament. The arc chamber may be defined by the end walls **17**, **18** and upper and lower walls **19**, **20** of the rectangular carbon member **14**, and may, for example, be 8″ long, 1¼″ wide, and 19/32″ deep. In the end wall **18** is contained a slot **15**, which may be in the elliptical shape more clearly illustrated in Figs. 3 and 4, for admission of electrons into the chamber, while in wall **17** is contained a similar slot **30**, also illustrated in Figs. 3 and 4. Over the open front face of the member **14** is fitted a slotted carbon member **21**. The slot in that member may extend substantially the length of the chamber, and may be 7/16 inch wide, in accordance with the principles known to the art. A box-like carbon member **8** is fitted to the back of member **14** and is joined thereto and maintained in proper alignment therewith by means of protuberance **22** which is press-fitted into groove **23** in wall **18**. The chamber and member **8** may, of course, be cut from a single carbon block to form an integral unit, if preferred. In the front face of member **8** is cut vapor entry slot **16**, which preferably extends from wall **24** to a point substantially ¾ the length of the chamber, as shown in the sectional view of wall **25**. The rear face of the member **8** communicates with a source of vapor, not shown. Anode **34**, which may be a stepped carbon plate of any convenient thickness, may be mounted to wall **25** and insulated therefrom by threaded insulator **35**, and may extend parallel to wall **17** at any convenient distance therefrom, substantially to the front end thereof. An interval of 5/32″ is one convenient clearance distance which has been employed. Screw **36** extends through the body of the insulator and through wall **25**, and is secured in position by nut **33**, holding the insulator firmly to the wall. Screw **32** fastens the anode **34** to the insulator **35**, without touching screw **36** or wall **25**.

It is to be understood, of course, that the members **8** and **14** may be constructed from a single block of carbon or other material known to the art, and that the chamber walls may be curved or straight without departing from the spirit or the scope of the present invention, of which the foregoing is but a preferred embodiment.

Referring now to Fig. 3, which illustrates a preferred construction of the anode and cathode collimating slots: both slots are formed by elliptical arcs, rounded off with a circular arc at each end. The cathode slot is preferably .094" in width throughout, while the anode slot, indicated by the dotted lines, is preferably .062" wide. As is apparent from the drawing, the anode slot is aligned centrally of the cathode slot, so that an electron beam defined by the cathode slot and passing through the anode slot to the anode would cause the electrons in the front and back .016" of the beam to drain onto the wall **17**.

The improvements which I have made in ion sources can be best understood from a description of the operation of the embodiment illustrated in Fig. 2 when employed in a calutron mass separator of the type described by Smyth, supra, and a brief discussion of some of the problems and difficulties associated with operation of prior sources.

Vaporized molecules of the charge material, which may, for example, be UCl_4, enter the chamber of member **8** from the heated charge container, pass through vapor slot **16**, and enter the arc chamber. There, many of these molecules are ionized by the arc flowing from heated filament **9**, through cathode defining slot **15**, through anode defining slot **30**, to anode **34**. Many of the ionized atoms are accelerated out of the chamber by the action of an electrostatic field set up between the chamber and successive accelerating electrodes. For example, the chamber may operate at ground potential, the first accelerating electrode, not shown, may be 40,000 volts negative, and the second successive electrode, not shown, may be 30,000 volts negative. Filament **9** also is maintained negative with respect to the walls of the arc chamber by, for example, 100 volts. As is known in the art, the pressure in the arc chamber may be maintained very low, of the order of one to five microns, and the temperature of the source may be maintained at 500–600° C.

Because the entire assembly is located in a strong magnetic field, as is fully set forth by Smyth, supra, electrons emitted from the filament tend to travel along magnetic lines of force. Due to the potential difference existing between the filament and the arc chamber walls, electrons travel in helical paths parallel to the magnetic field through the slot **15**, which defines the beam, across the chamber, and out through slot **30** to impinge upon the anode. If the insulated anode be left "floating," then electrons will collect thereon and build up a negative charge sufficient to repel many electrons back through the slot **30** and across the chamber. At the filament, those electrons will again be repelled across the chamber to the anode, and that oscillatory movement will continue until the electron combines with an ion to form a molecule or strikes a wall of the chamber and is drained off. It has been recognized that by setting electrons into oscillation back and forth across the chamber, the effective ionizing efficiency of a source should be increased, because where in a source like that of Fig. 1, each electron makes only one pass through the vapor. In a source adapted to produce oscillations electrons may make several such passes, and the probability that a given electron will strike a vapor molecule is increased. No substantial increase in efficiency due to such oscillations has been achieved, however, which warranted incorporation of such features in standard sources.

However, in combination with the above means for providing an oscillating electron motion across the chamber, I have found that by critically positioning a defining slot near the anode I can markedly improve the ionizing efficiency of the ion source. The anode slot is made uniformly narrower than the cathode slot so that only the central portion of the electron arc reaches the anode, the outer portion being drained off by the edges of the anode slot. I have observed the greatest improvement when about one-third of the beam is so removed, but noticeable improvements occur when other amounts of the arc intercepted. The removal of the outer portion of the arc sets up a positive space charge on the outer

surface thereof, causing an absence of electrons about the arc plasma, which includes the oscillating electrons and ions of the charge material in a sharply defined region of high ion density. Because of this removal of electrons by the edges of the anode slot, the recombination of ions with electrons is substantially reduced; and as a result thereof, a greater number of ions may be drawn out of the arc plasma to form the ion beam. It is apparent that every recombination requires another electron collision to reionize that molecule, so that preventing recombination of ions already formed and in the arc plasma, ready to be accelerated to the collector electrode, will effectively increase the apparent efficiency of ionization of the source.

Moreover, arcs in prior sources were subject to instability caused by the rapid drain of positive ions from the plasma by the high accelerating voltages applied to the slit electrodes, leaving behind an excess of electrons. My new and novel electron draining anode slot removes a great number of these excess electrons. In addition, it had previously been observed that positive ions will not leave the arc plasma as rapidly as is desired, because of the electrostatic force exerted by the electrons in the plasma to retain them therein. But my novel drain arrangement removes many of those undesired electrons, and allows rapid exodus of the desired positive ions.

A further improvement in operation of the ion source has been effected by moving the vapor entry slot, through which the vapor enters the arc chamber, towards the filament end of the chamber from its normal position shown in Fig. 1. This improvement is evidenced by a decrease in build-up of a deposit of neutralized uranium ions, for example, where UCl_4 is the charge material employed, at the anode end of the chamber. That deposit results in part from unequal vapor distribution within the arc chamber, the chlorine ions tending to accumulate near the filament end of the chamber. Because the ionization potential of chlorine is of the order of 35 volts, while that of uranium is only about 3 volts, and because the electrons lose energy by collision as they travel across the chamber, at the anode end of the chamber more uranium will be ionized than chlorine. But at the filament end of the chamber, where electron energies are high, much of the chlorine will also be ionized. To secure more uniform ion distribution, therefore, vapor is admitted at the high energy end of the chamber, and blocked off near the anode end. A decrease in formation of metallic deposits on the source which cause short circuits, block free exit of ions, and tend to close defining slots, results from my redistribution of vapor.

An additional improvement tending to overcome the problem of improper vapor distribution, and consequently providing a more uniform arc plasma, results from the structure of my improved source in admitting the vapor to the arc chamber very close to the arc. In a preferred embodiment of my ion source, the vapor may be admitted substantially ¾" from the arc plasma, as compared to double that distance in prior sources. In the prior deep boxes, the vapor tended to distribute itself unequally, as was pointed out above, and even though the vapor was admitted close to the filament end of the chamber, some improper distribution would occur during the passage of the vapor from the entry slot to the arc in the front of the chamber. But by introducing the vapor very close to the arc, so that the molecules enter the arc almost immediately upon entering the chamber, improper self-distribution within the chamber is minimized, and the desired uniform arc results.

While my invention has been described in connection with a specific embodiment and application, it is to be understood that the novel features of source construction set forth herein are not limited to the calutron, but apply equally to mass spectrometers or spectrographs of the more conventional type, to spectrometers having crossed electric and magnetic fields, and to other known ion separators and particle accelerators. Nor is my invention restricted to the separation of the isotopes of uranium, that element having been utilized for illustration only, and not to define the limits of the invention.

I claim:

1. In an ion source for the ionizing of atoms of a gaseous material admitted thereto by bombardment of said atoms with an electric arc, a filament for emitting a copious supply of electrons, a source of electrical power connected thereto for heating said filament, an electrode

electrically insulated from said filament disposed in directive relation with said filament, a shallow conductive-walled chamber disposed between said filament and said electrode and having an aperture in opposite side walls thereof for passage of said arc between said filament and said electrode, means for establishing a magnetic field across said chamber parallel to said arc a source of electrical potential connected both to said filament and said chamber for maintaining said chamber at a more positive potential than said filament for accelerating electrons into said chamber, the back wall of said chamber having a passage therein for admission of said gaseous material, one end of said passage being located at the filament end of said chamber, said passage being substantially shorter than said chamber, the front wall of said chamber having therein a passage for exit of ions, said aperture in said side wall nearest said electrode being disposed so as to intercept portions of the front and back of said arc, thereby removing electrons from said source and deterring recombination of ions therein.

2. An ion source comprising in combination a shallow arc chamber for containing a gaseous material to be ionized, the back and front walls of said chamber each containing therein a passage for the admission of said substance and the exit of ions, respectively, one end of said admission passage being located at the filament end of said chamber, said admission passage being substantially shorter than said chamber, a filament and an electrically insulated anode electrode disposed at opposite sides of said chamber external thereto, a source of filament current, a source of potential connected between said filament and said chamber to accelerate electrons from said filament into said chamber, the side walls of said chamber each containing an elliptical aperture for defining a beam of electrons emitted by said filament, means for establishing a magnetic field across said chamber parallel to said beam said aperture nearest said anode being uniformly narrower than that aperture nearest said filament to intercept portions of said beam nearest the back and front of said chamber for preventing recombination of ions with electrons in the vicinity of said beam.

3. In an ion source including a filament, a source of filament current, means for admitting gas to be ionized, and means for removing ions, a first beam defining member having an aperture therein, means for accelerating electrons through said aperture an arc chamber the improvement comprising an electrode disposed in directive relation with said filament, said first beam defining member, and said arc chamber of said source, and means for establishing a magnetic field across said chamber parallel to said filament electrode alignment said electrode being electrically insulated from the remainder of said source, whereby electrons are induced to oscillate through said chamber between said electrode and said filament, and a second beam defining member disposed between said first member and said electrode, and including a slot substantially conforming in contour to said aperture in said first member but of a lesser cross-section than said aperture and disposed in critical alignment therewith.

4. In an ion source for the ionizing of atoms of a gaseous material admitted thereto by bombardment of said atoms with an electric arc, a filament for emitting a copious supply of electrons, a source of electrical power connected thereto for heating said filament, an electrode electrically insulated from said filament disposed in directive relation with said filament, a conductive-walled chamber disposed between said filament and said electrode and having an aperture in opposite side walls thereof for passage of said arc between said filament and said electrode, means for establishing a magnetic field across said chamber parallel to said arc a source of electrical potential connected both to said filament and said chamber for maintaining said chamber at a more positive potential than said filament for accelerating electrons into said chamber, the back wall of said chamber having a passage therein for admission of said gaseous material, the front wall of said chamber having therein a passage for exit of ions, said aperture in said side wall nearest said electrode being disposed so as to intercept portions of the front and back of said arc, thereby removing electrons from said source and deterring recombination of ions therein.

References Cited in the file of this patent

UNITED STATES PATENTS

2,470,745	Schlesman	May 17, 1949
2,489,344	Washburn	Nov. 29, 1949
2,511,728	Long	June 13, 1950