(No Model.)

A. H. VAN SCIVER.

OYSTER DREDGE.

No. 590,712. Patented Sept. 28, 1897.

Fig. 1.

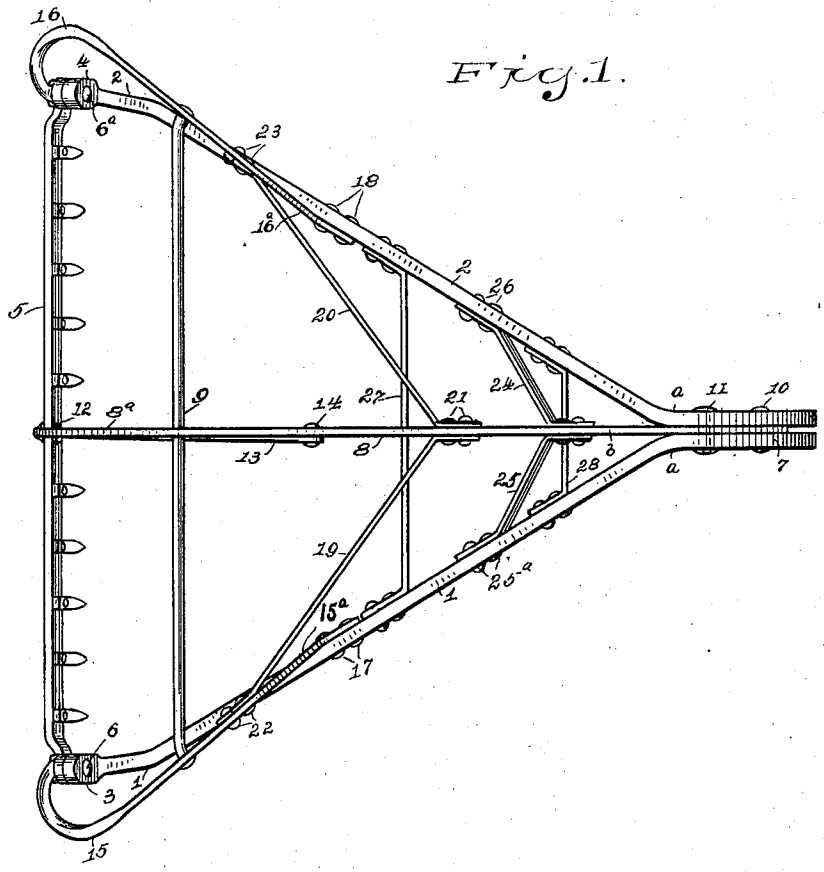

Fig. 2.

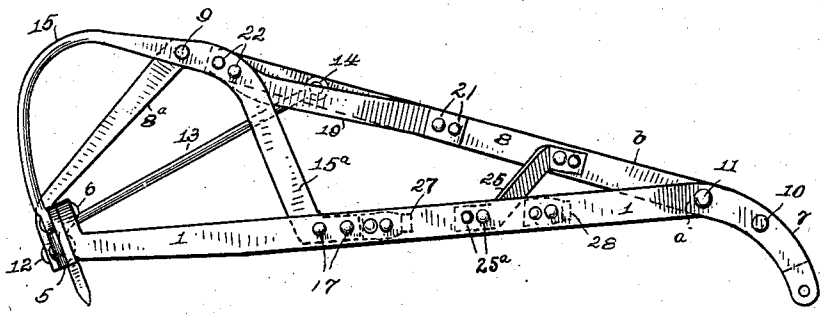

WITNESSES

H. A. Sault.

M. J. Keane.

INVENTOR

Abraham H. Van Sciver.

By Geo. D. Phillips.

his Atty.

THE NORRIS PETERS CO., PHOTO-LITHO., WASHINGTON, D. C.

UNITED STATES PATENT OFFICE.

ABRAHAM H. VAN SCIVER, OF BRIDGEPORT, CONNECTICUT.

OYSTER-DREDGE.

SPECIFICATION forming part of Letters Patent No. 590,712, dated September 28, 1897.

Application filed October 5, 1896. Serial No. 607,868. (No model.)

To all whom it may concern:

Be it known that I, ABRAHAM H. VAN SCIVER, a citizen of the United States, and a resident of Bridgeport, in the county of Fairfield and State of Connecticut, have invented certain new and useful Improvements in Oyster-Dredges, of which the following is a specification.

My invention relates to an improved oyster-dredge; and it consists in certain details of construction to be hereinafter more fully explained.

To enable others to fully understand my invention, reference is had to the accompanying drawings, in which—

Figure 1 represents an upper plan view of my improved dredge, and Fig. 2 is a side elevation.

Heretofore it has been the custom in constructing oyster dredges to run a rod to serve as a brace from the head of the dredge to the center of the blade at that point, and this brace was not carried above the plane of the lower side pieces of the dredge. While this central rod gave a slight support to the blade, it imparted none whatever to the side pieces or rails, nor did it receive, in turn, support from such side pieces. It was also customary to weld the head to the side pieces at the neck and to make such side pieces of square stock. This manner of welding weakened the dredge in the neck, and the square iron side pieces were also much weakened by reason of forming holes therein to admit the cross-braces. The bows, which also formed upper rails or side pieces, were arranged in the same vertical plane with the side pieces or frames and were also extended to the neck and welded thereto. This arrangement not only made a very weak construction, which could only be strengthened by greatly increasing the weight of the dredge beyond the point of utility, but it gave two widely-separated bearing-points on the upper side of the dredge, so that it would readily capsize and could not automatically right itself.

In my improved form of dredge I elevate this central brace, so that it resembles in form and appearance the old bow, and by running braces to the side pieces or frames I greatly strengthen the central portion, as well as all parts of the dredge. Besides, this raised central brace, which serves as a backbone, operates to prevent the capsizing of the dredge when hauled aboard the boat. The neck will always be the first to engage with the boat and, being narrow, will have a tendency to roll the dredge bottom side up, but this tendency will be checked by the high position of the central brace, which brace will throw the dredge back to its normal position. The central brace and also the side pieces are made of flat bars of iron arranged vertically, which construction makes the whole dredge not only much lighter, but stronger. These side pieces and the central brace are each composed of one strip of iron continued into the head, so that no welding in the neck is necessary.

The construction and operation of my improved dredge are as follows:

1 and 2 represent the side pieces or frames, which, as before mentioned, are made of flat bars provided at the forward end with the projections 3 and 4 to be attached to the blade 5 by the bolts or rivets 6 6^a. These side frames continue to the rear and terminate in the curved head portion 7.

8 is the raised center brace projecting well above the plane of the side frames 1 and 2. This brace is made approximately straight from the cross brace-rod 9 to the head 7, and the end of which is embraced by the side frames 1 and 2 and the three firmly held together by the rivets 10 and 11. The forward end of this central brace from the said rod 9 has the angular arm 8^a, which, it will be understood, is but a continuation of said brace, the forward end of which overlies the outer surface of the blade 5, and the two are united together by the rivet 12, which arrangement of the elevated brace gives greater strength to the central portion of the blade than would be the case if, as formerly, a straight rod ran through the center of the dredge from the blade to the head, and it also strengthens the angular portion 8^a. The brace-rod 13 is connected by one end to the rivet 12 of the blade and by the opposite end to the rivet 14 in the raised brace 8. This elevated central brace, as well as the side frames 1 and 2, as before mentioned, is made of wide but comparatively thin stock, so as to impart additional strength with a

corresponding degree of lightness. In other words, the vertical arrangement of the flat bars to form the side frames and central brace will impart greater strength with less weight than when the side bars are made of square stock. Besides, the flat bars enable the several lateral braces running from the central brace to the side frames to have two holding-rivets.

15 and 16 are side bows attached to the blade by the bolts 6 6^a, and they have, as usual, an outward flare, as shown, but instead of extending these bows to and welding them to the lower side frames at the neck *a*, as formerly, they are turned down so that their ends 15^a and 16^a are connected midway of the side frames by the rivets 17 and 18. This arrangement leaves the elevated central brace clear and unobstructed for the purpose to be hereinafter more fully explained.

19 and 20 are laterally-projecting side braces connecting the central brace with the side bows by rivets 21, 22, and 23.

24 and 25 are other and shorter braces connecting the central brace with the side frames by rivets 25^a and 26.

27 and 28 are also lateral braces connecting the side frames 1 and 2.

The rod 9, passing through the central brace 8, extends also through the flat portion of the bows 15 and 16, whose projecting ends are headed, thus serving to give additional strength to that portion of the dredge.

When the dredge is hauled aboard the boat, the first point to be brought into contact with the boat's rail will be the neck *a*, and the tendency of the dredge will be to tip to the right or left, and with the old form of dredges, where there is no raised central brace, the dredge would turn bottom side up and rest on the upper side pieces or extension of the bows; but in my improved construction before the dredge will tip far enough to entirely lose its balance the central brace will engage the boat's rail at about the point *b*, which will instantly throw the dredge back into its normal position until the bottom edge of the side frames 1 and 2 are sufficiently engaged to maintain this normal position.

From the foregoing description it will be readily seen that my improved dredge is not only lighter than the old form of dredge, but by reason of the elevated central brace is much stronger throughout all of its parts, while the advantage derived in always keeping its equilibrium is of vital importance. As before mentioned, this raised central brace serves as a backbone or fin to prevent capsizing of the dredge, as well as a brace to strengthen the whole construction, but its main purpose is to prevent capsizing. As the dredges used on steamers run from four feet to seven feet in width, it is imperative that this central brace should connect with the blade, as shown; but in small dredges weighing forty pounds or less this central brace can stop at the cross-rod 9.

Having thus described my invention, what I claim as new, and desire to secure by Letters Patent, is—

1. An improvement in dredges, of the character described, with the side frames, of a longitudinal central brace elevated above the plane of such side frames, one end of such brace attached to the blade and the opposite end merging, with the side frames to form the head of the dredge, as described.

2. An improvement in dredges, of the character described, of side frames each made of a single bar of metal, a longitudinal central brace elevated above the plane of such side frames, and also made of a single piece of metal, one end of such frames and central brace attached to the blade and the opposite ends connected together to form the head, an angular brace running from the blade and connecting with the central brace, intermediate of its ends to further strengthen the blade, as described.

3. An improvement in dredges, of the character described, of the side frames, a longitudinal central brace elevated above the said frames, connected to the blade and merging, with the end of such frames, to form the head, side bows having one of their ends attached to the blade and their opposite ends intermediately of the length of such frames, lateral braces connecting such bows with said central brace, and lateral braces connecting such central brace with the side frames, substantially as shown.

Signed at Bridgeport, in the county of Fairfield and State of Connecticut, this 30th day of September, A. D. 1896.

ABRAHAM H. VAN SCIVER.

Witnesses:
LEWIS F. PELTON,
MORGAN J. KEANE.