Sept. 25, 1951 W. HOPPE 2,569,101

LABEL SEVERING AND APPLYING MACHINE

Filed Nov. 12, 1948 7 Sheets-Sheet 1

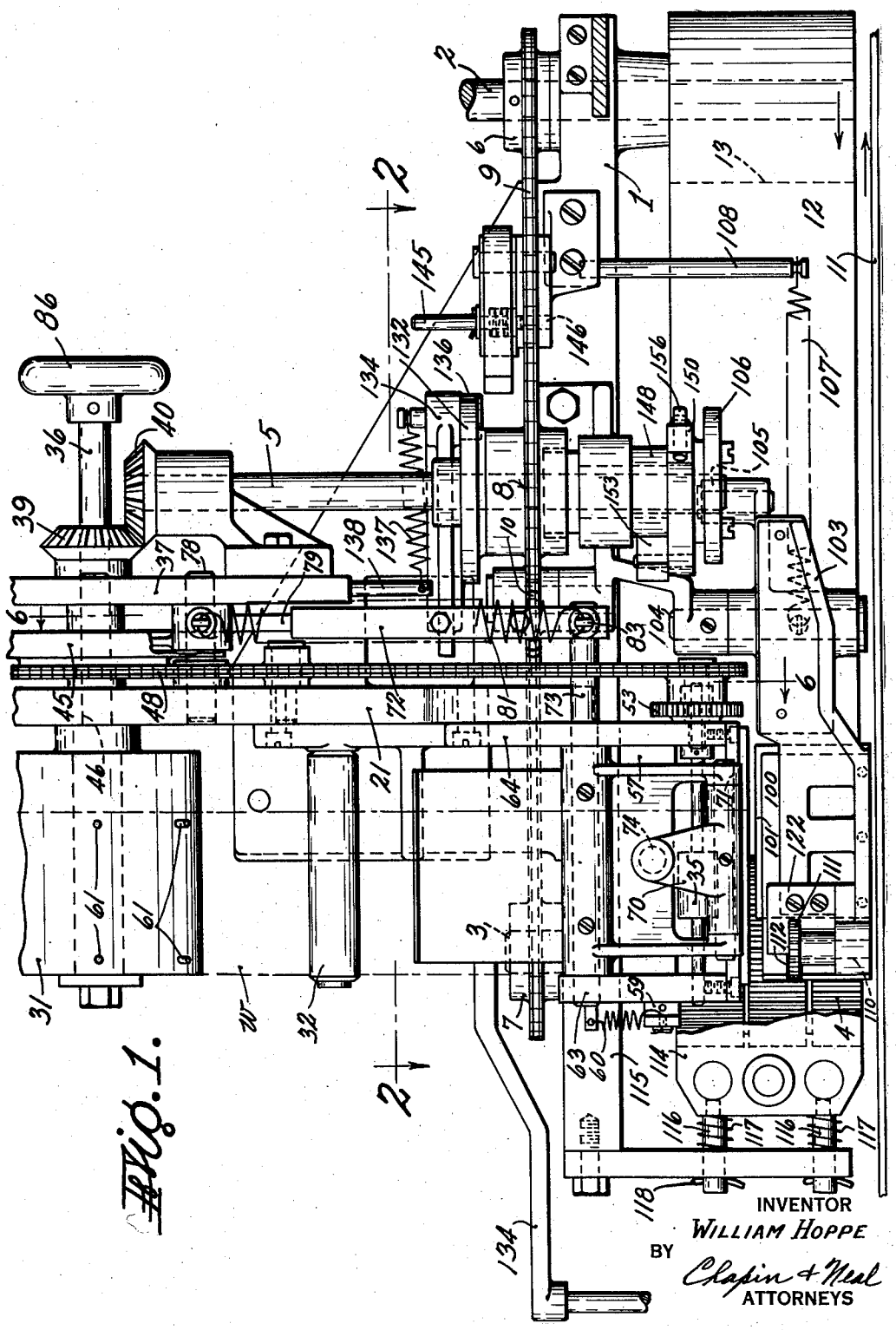

Fig. 1.

INVENTOR
WILLIAM HOPPE
BY
Chapin & Neal
ATTORNEYS

Sept. 25, 1951 W. HOPPE 2,569,101

LABEL SEVERING AND APPLYING MACHINE

Filed Nov. 12, 1948 7 Sheets-Sheet 2

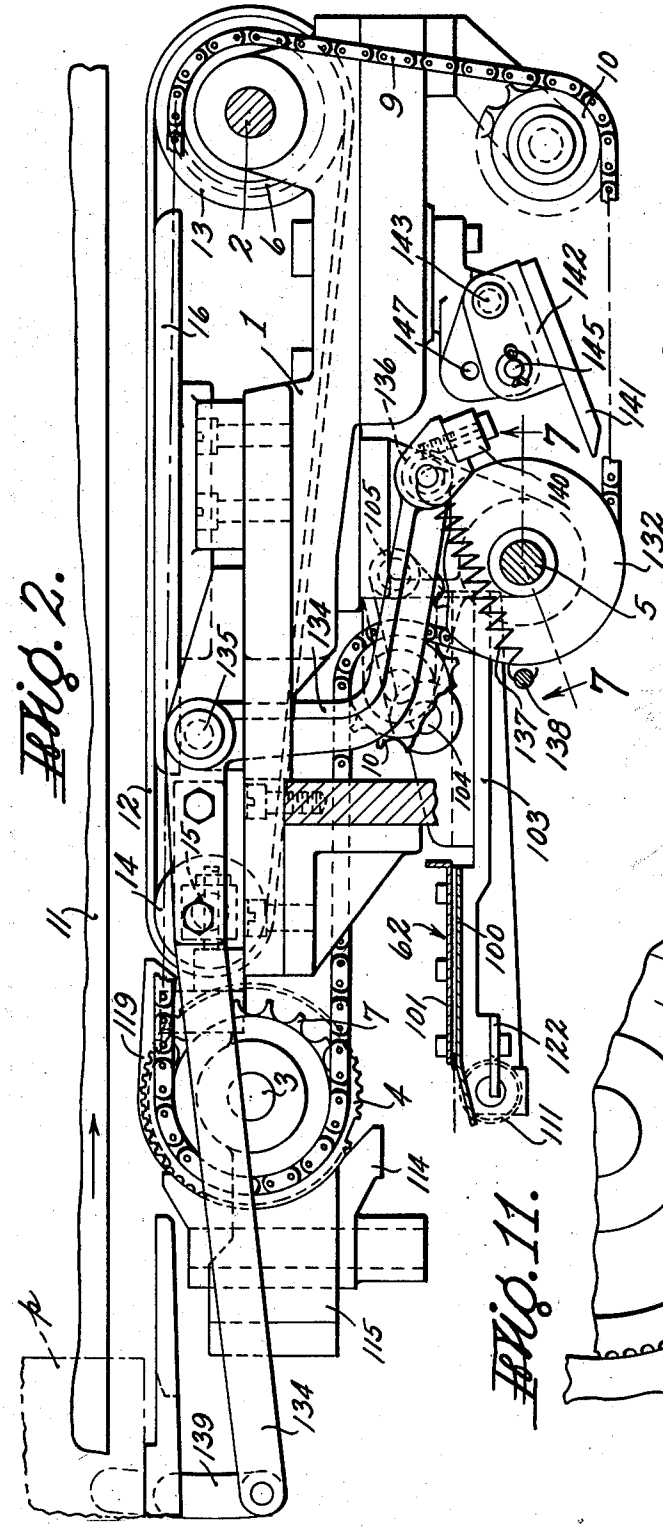

Fig. 2.

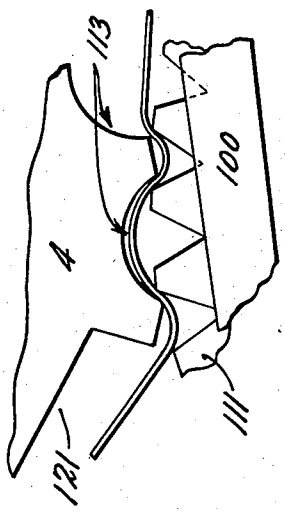

Fig. 12.

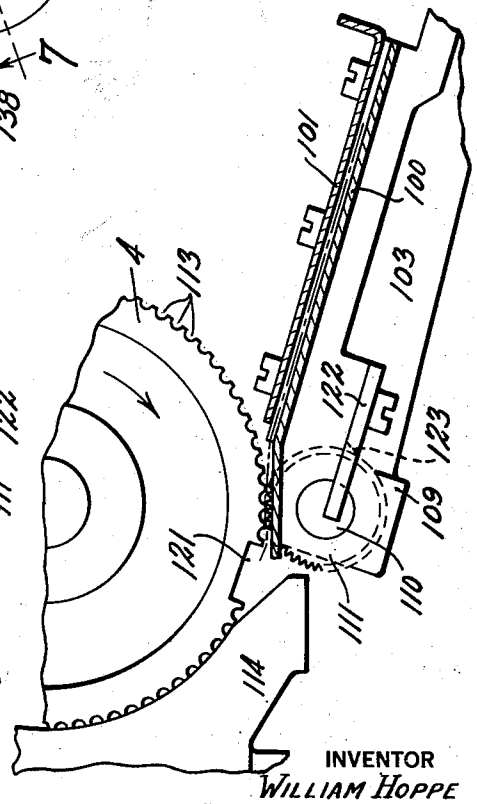

Fig. 11.

INVENTOR
WILLIAM HOPPE
BY
Chapin + Neal
ATTORNEYS

Sept. 25, 1951 W. HOPPE 2,569,101

LABEL SEVERING AND APPLYING MACHINE

Filed Nov. 12, 1948 7 Sheets-Sheet 3

Fig. 3.

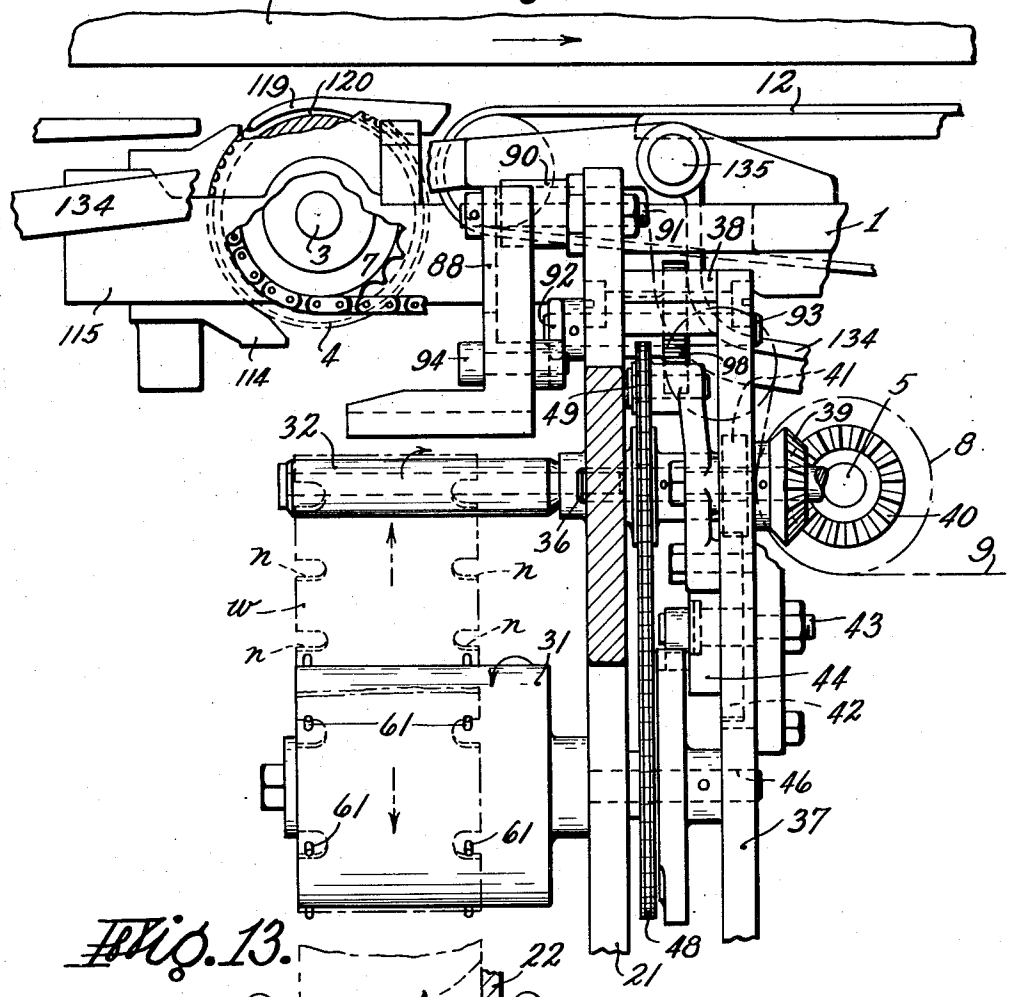

Fig. 13.

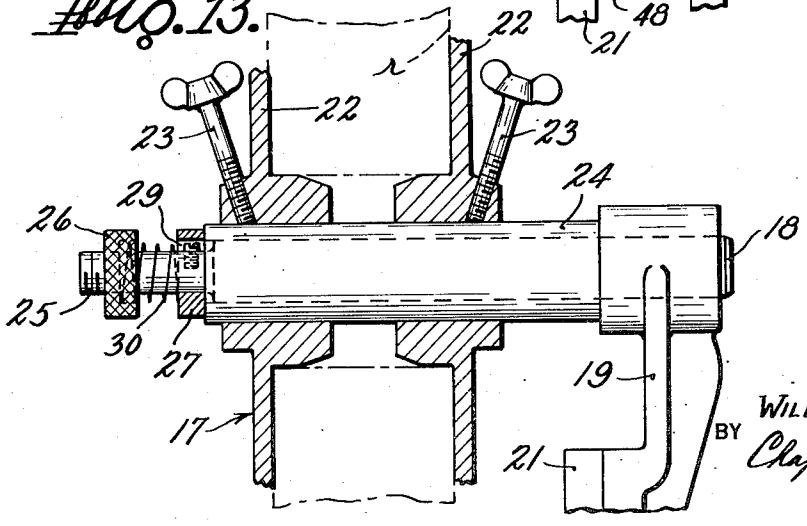

INVENTOR
WILLIAM HOPPE
BY Chapin + Neal
ATTORNEYS

Sept. 25, 1951 W. HOPPE 2,569,101

LABEL SEVERING AND APPLYING MACHINE

Filed Nov. 12, 1948 7 Sheets-Sheet 4

Fig. 4.

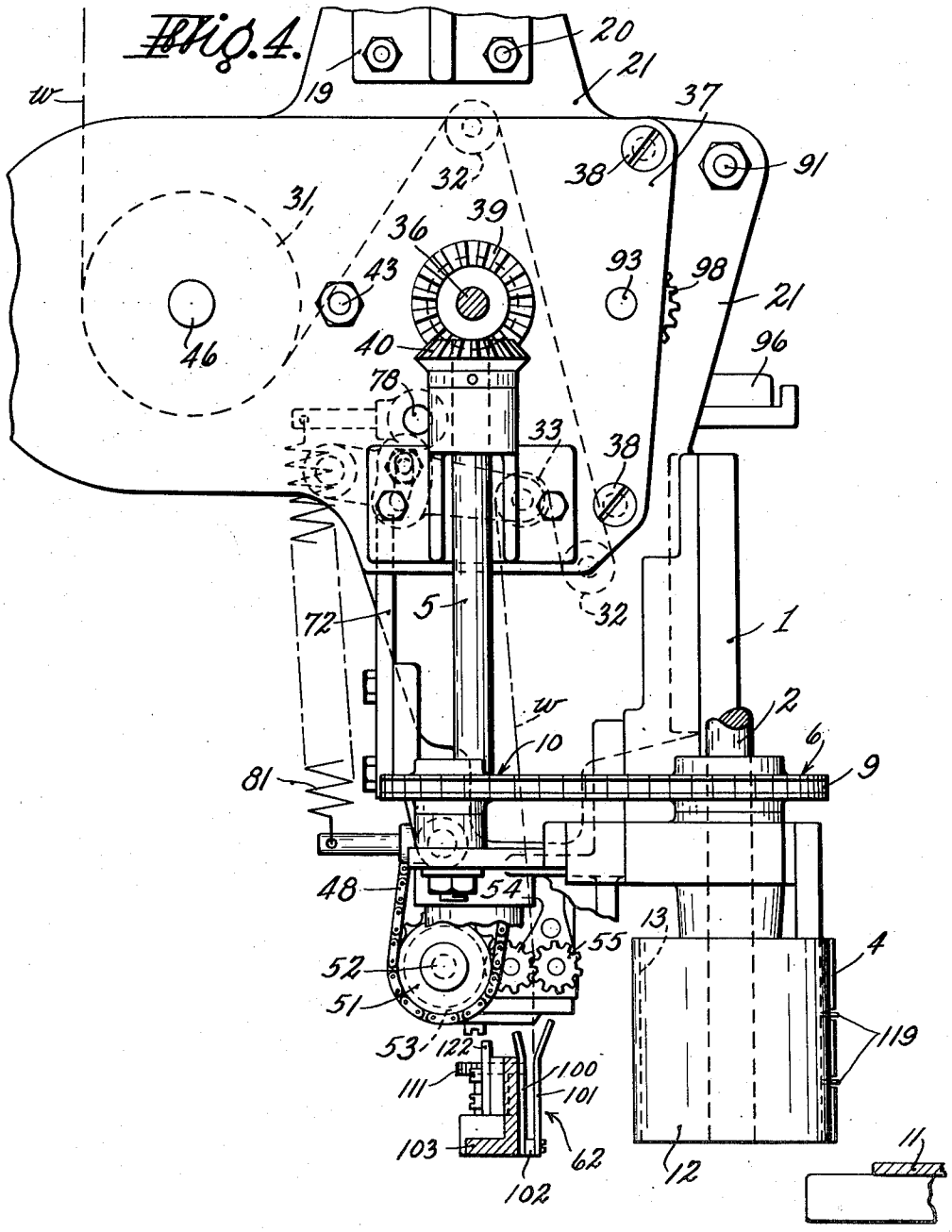

INVENTOR
WILLIAM HOPPE
BY Chapin & Neal
ATTORNEYS

Sept. 25, 1951 W. HOPPE 2,569,101

LABEL SEVERING AND APPLYING MACHINE

Filed Nov. 12, 1948 7 Sheets-Sheet 5

Fig. 5.

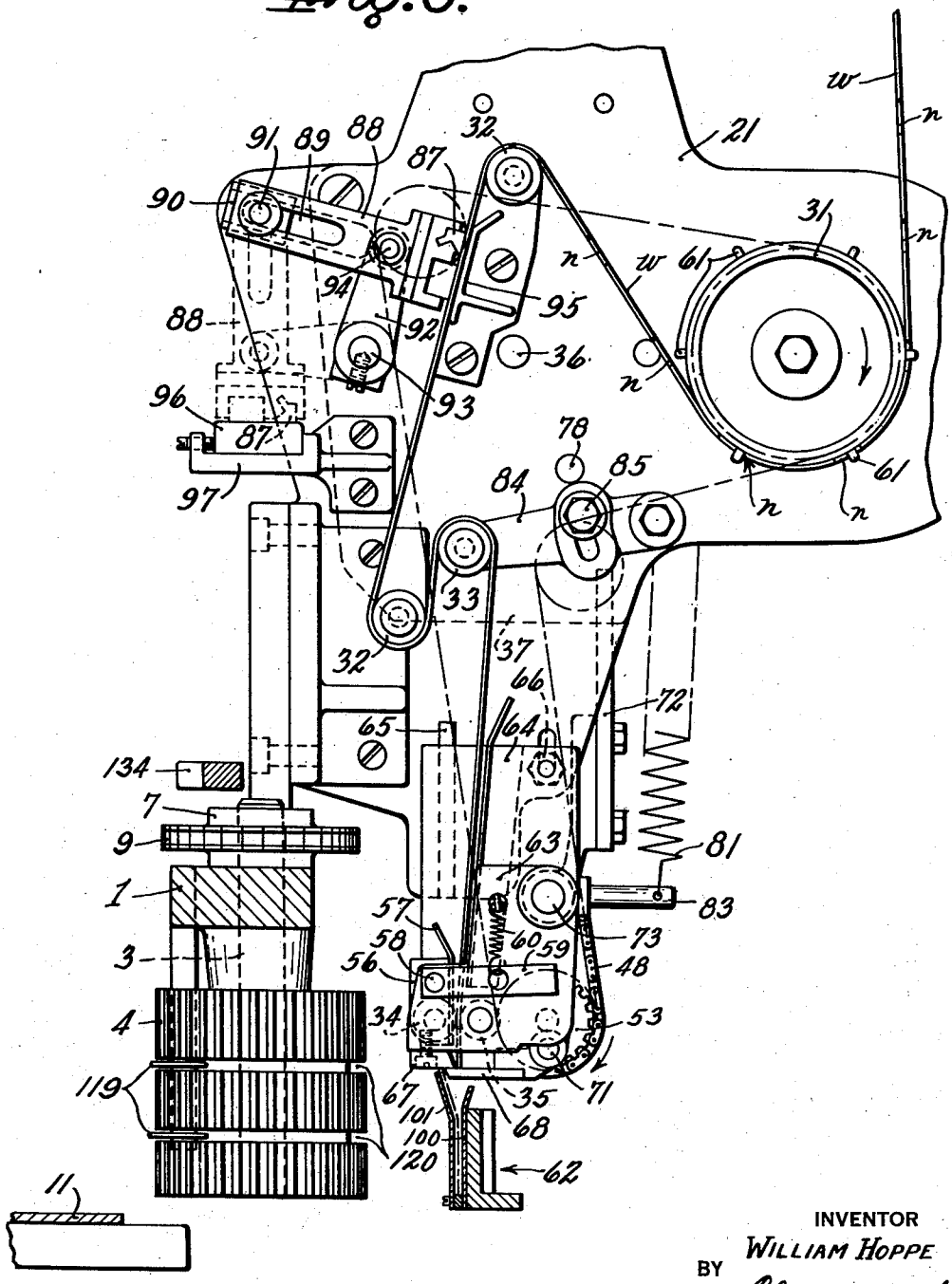

INVENTOR
WILLIAM HOPPE
BY
Chapin & Neal
ATTORNEYS

Sept. 25, 1951 W. HOPPE 2,569,101

LABEL SEVERING AND APPLYING MACHINE

Filed Nov. 12, 1948 7 Sheets-Sheet 6

Fig. 6.

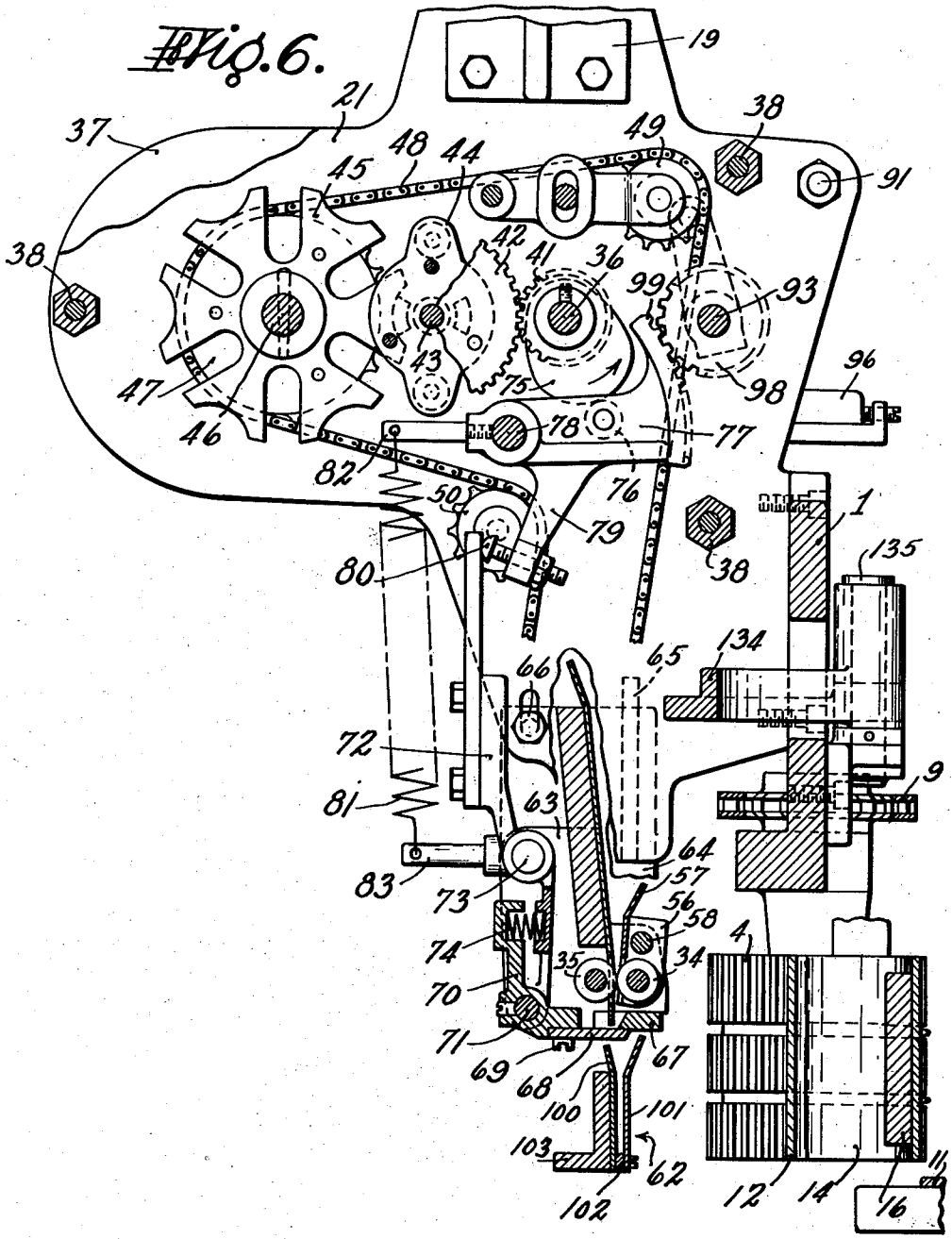

INVENTOR
WILLIAM HOPPE
BY Chapin + Neal
ATTORNEYS

Sept. 25, 1951 W. HOPPE 2,569,101

LABEL SEVERING AND APPLYING MACHINE

Filed Nov. 12, 1948 7 Sheets-Sheet 7

Fig. 10.

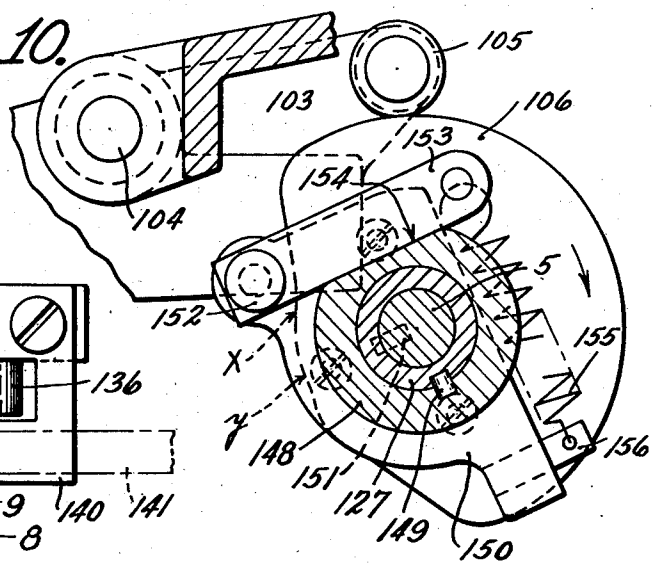

Fig. 7.

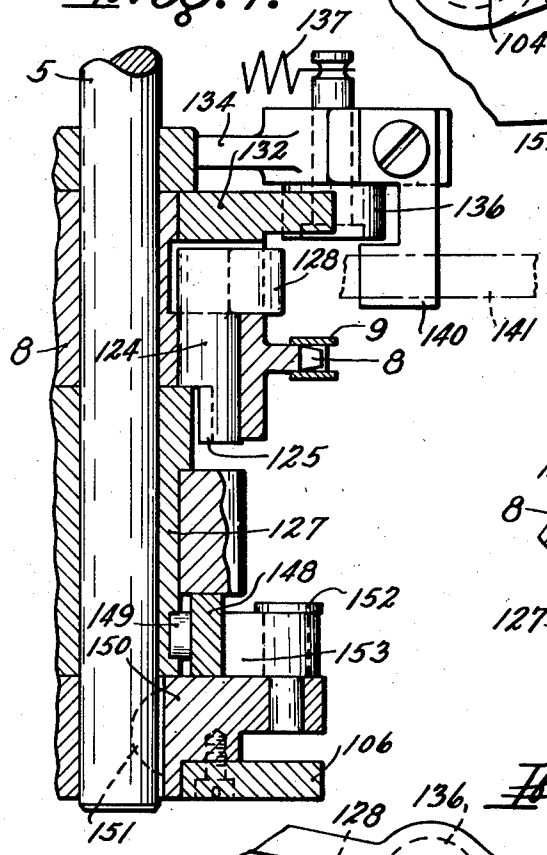

Fig. 9.

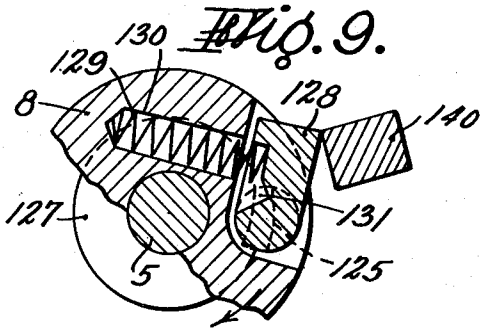

Fig. 8.

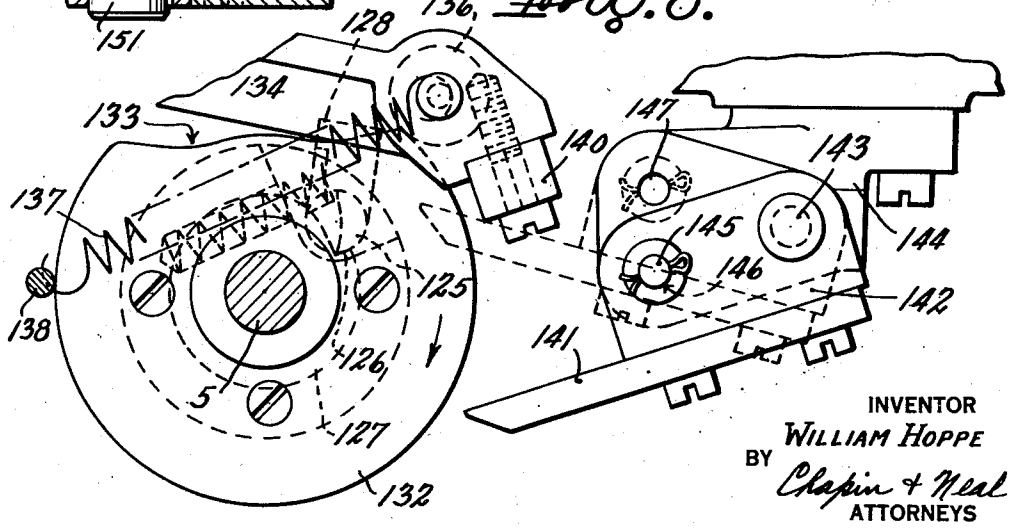

INVENTOR
WILLIAM HOPPE
BY
Chapin & Neal
ATTORNEYS

Patented Sept. 25, 1951

2,569,101

UNITED STATES PATENT OFFICE

2,569,101

LABEL SEVERING AND APPLYING MACHINE

William Hoppe, Longmeadow, Mass., assignor to National Bread Wrapping Machine Co., East Longmeadow, Mass., a corporation of Massachusetts

Application November 12, 1948, Serial No. 59,628

9 Claims. (Cl. 216—25)

1

This invention relates to a labeling machine for applying labels to the ends of articles and packages, such as wrapped loaves of bread, cartons, and similar packaged goods.

Among the objects of the invention are to provide a so-called end labeler which will accurately and securely place the labels on the packages at a high rate of speed, which will at the same time meet a substantial range of package and label sizes, which can be operated in association with a wrapping machine and which will operate with labels coated with heat activated adhesive, such as a thermoplastic material.

A further object is to provide a feeding mechanism for a web, from which labels are severed, which will accurately register the label web with the cutting device which severs the labels and with a printing device for applying additional indicia at predetermined positions on previously printed labels just prior to the severance of the labels from the web.

Other and further objects and advantages of the invention will be made apparent in the following specification and claims.

In the accompanying drawings which illustrate one embodiment of the invention,

Fig. 1 is a side elevational view, the label supply reel being omitted;

Fig. 2 is a sectional view substantially on line 2—2 of Fig. 1;

Fig. 3 is a fragmentary plan view, parts being broken away showing the label web feed;

Fig. 4 is an end elevational view of the label feed and applying means looking from the right in Fig. 1;

Fig. 5 is a view similar to Fig. 4 but looking from the left of Fig. 1;

Fig. 6 is a sectional view substantially on line 6—6 of Fig. 1;

Fig. 7 is a detail sectional view substantially on line 7—7 of Fig. 2;

Fig. 8 is a detail plan view of the structure shown in Fig. 7, the driving pawl being in operative position;

Fig. 9 is a detail plan view parts being broken away showing the driving pawl in its out position;

Fig. 10 is a detail section of the overload release mechanism;

Fig. 11 is a fragmentary detail view of the applying drum as shown in Fig. 2, but on a larger scale and showing the label delivery device in discharging position;

Fig. 12 is an enlarged detail view showing the relation of the feeding teeth of the applying drum to the discharge roll; and

2

Fig. 13 is a detail sectional view of the label roll support.

Referring to the drawings, more particularly Figs. 1 and 2, the machine is shown as comprising a frame 1 which supports a vertical drive shaft 2, a vertical shaft 3 which carries the label applying drum 4 and a vertical cam shaft 5. Shafts 2, 3 and 5 carry sprockets 6, 7 and 8 respectively which are connected by a sprocket chain 9 which also passes around idler sprockets 10. Sprockets 6 and 7 are fixed to their respective shafts so that the applying drum 4 is constantly driven. Sprocket 8 is rotatable on shaft 5 and is normally connected thereto by a clutch mechanism later described, which is automatically thrown out in the absence of a package to be labeled.

Articles or packages to be labeled are carried past the applying drum 4 by a suitable conveyor 11 which may be the discharge conveyor of a wrapping machine, the applied labels being held against the package by a presser belt 12 passing around and driven by a pulley 13 secured to drive shaft 2 and around an idle pulley 14 mounted on a stub shaft 15. Belt 12 is preferably backed up by a plate 16 supported by the frame 1.

Labels are supplied in the form of a web *w* Figs. 3, 4 and 5, the web being provided with longitudinally spaced openings positioned in predetermined relation to the line along which the web is to be cut to form individual labels in the form shown, the opposite edges of the web being notched as indicated at *n*, at the ends of the lines along which the web is subsequently severed to form individual labels.

The label web is drawn from a roll *r* carried on a rotatable reel 17 (Fig. 13), rotatably mounted on a cantilever rod 18 extending from a standard 19 bolted at 20 (Fig. 4) to frame member 21. The reel comprises flange members 22 adjustably secured by screws 23 to a sleeve or hub 24 rotatably mounted on the rod 18. The free end of rod 18 is reduced and threaded as at 25 to receive a knurled nut 26. A collar 27 is slidably mounted on the reduced end of rod 18 and is held against rotation by a set screw 28 threaded in the rod and engaging in a key way 29 formed in the collar. A spring 30 compressed between nut 26 and collar 27 presses collar 27 against the end of sleeve 24 to exert a frictional resistance to the rotation of the reel, which resistance can be adjusted by advancing or retracting the knurled nut 26.

As best shown in Fig. 5 the label web is drawn from the reel around a registration drum 31, around stationary guide rolls 32, and over an adjustable roll 33 to feed rolls 34 and 35.

The registration drum 31 and feed rolls 34 and 35 are intermittently driven from cam shaft 8 through a short shaft 36, Fig. 4, journaled in frame member 21 and plate member 37 supported in spaced relation to member 21 by bolts 38. Outwardly of plate 37 to shaft 36 carries a bevel gear 39 meshing with a bevel gear 40 carried at the upper end of cam shaft 5. As best shown in Fig. 6, shaft 36 carries a gear 41 which meshes with a gear 42 on a short shaft 43 to which is fixed a double Geneva crank 44 driving a Geneva wheel 45 secured to shaft 46 which carries the registration drum 31. Shaft 46 also carries a sprocket 47 which drives a chain 48 passing around a take-up sprocket 49, an idler 50, and (see Fig. 4) a sprocket 51 mounted on a stub shaft 52. As shown in the latter figure shaft 52 also carries a gear 53 which drives intermeshing gears 54 and 55 on the respective shafts of feed rolls 35 and 34 to drive the latter in timed relation with drum 31. Feed roll 34 is carried in a frame 56 which also carries web guide 57 and is secured to a pivot rod 58. The latter is provided at one end, Fig. 5, with an arm 59, to which is connected a tension spring 60 urging roll 34 toward roll 35 to feed the wrapper web downwardly.

As best shown in Figs. 3 and 5 the registration drum 31 is provided adjacent its edges with circumferentially spaced pins 61 adapted to enter the notches n at the edges of the label. The circumferential spacing of the pins at their base is made slightly less than the distance between the centers of successive notches in the edges of the web. Since the drum is driven in the dircetion of web travel the drum tends to advance the web. The main feed rolls 34 and 35, however, are driven to draw the web forwardly at a slightly greater speed than the surface speed of the drum with the result that the web overruns the drum to bring the trailing edge of the notches n against the leading pair of pins 61 just prior to withdrawal of the latter from the notches (Fig. 5). The advance of the web is thus reduced to the surface speed of the drum, the frictional feed rolls 34—35, which are formed with smooth metal surfaces slipping easily on the surface of the web until the leading pair of pins are released from the notches. The tension adjustment on the label reel, previously described, assists in maintaining a proper tension on the web to secure the best functioning of the registering drum. The pins thus function to modify the feeding action of the drawing rolls to accurately maintain the registry of the labels with the label cutter and label modifying means such as the printing means shortly to be described. The registering drum constructed and operated as above described has substantial advantages over previous constructions in which registering projections are made to conform to the size and shape of the notches. The relatively small pins enter the notches without danger or tendency to tear or damage the edges of the notches due to slight variation in the spacing of the notches due to shrinkage or expansion of the web or other causes.

From the feed rolls 34—35 the leading label projects into a carrier generally indicated at 62 in Figs. 5 and 6, and is severed by a shearing cutter carried by spaced plate members 63 and 64, the latter being adjustably connected by a guide-

spline 65 and bolt 66 to the lower end of frame member 21, as shown in Fig. 5. As best shown in Fig. 6 the plate members 63 and 64 carry a fixed shear blade 67 cooperating with movable shear blade 68 secured by screws 69 to an angle member 70. Member 70 is pivoted at 71 to the lower end of a lever 72 which is secured intermediate its ends on a rock shaft 73. A spring 74 positioned between one arm of angle member 70 and lever 72 tends to maintain blade 68 in shearing relation with fixed blade 67. Lever 72 is rocked to move blade 68 in shearing relation with blade 67 by a cam 75 secured to shaft 36 and engaged by a roll 76 carried by one arm 77 of a bell crank pivoted at 78. The other arm 79 of the bell crank carries an adjustable screw 80 which engages the upper end portion of lever 72. A spring 81 connected between a pin 82 extending from the hub of the bell crank and a pin 83 extending from the pivot point of lever 72 acts to hold roll 76 against cam 75 and to maintain screw 80 in operative engagement with the upper end of lever 72.

As will be apparent from Fig. 5 the proper adjustment of guide roll 33, which is carried by a pivoted arm 84 held in adjusted position by bolt 85, and the adjustment of plate 64 on spline 65, will establish the desired registration of the cutter with respect to the line of cut which is to be maintained by registration pins 61. For convenience in threading the web, and in adjusting the various parts, shaft 36 is extended (Fig. 1) beyond bevel gear 39 and is provided with a hand wheel 86 by which shaft 36 and the parts driven therefrom may be manually manipulated.

It is frequently desirable to modify the label as by printing or perforating thereon additional data relating to specific articles, or to the contents of the packages being wrapped, such as number, color, type, size, or the date of packing, or the like, etc., a special blank area for receiving this date being frequently provided on the label to receive this data. In Fig. 5, by way of example, is shown a printing block 87 for this purpose. The printing block is releasably carried by a member 88 formed with slideway 89 receiving a block 90 pivoted at 91 to frame member 21. An arm 92, secured to a rock shaft 93 is pivotally connected to member 88 at 94 to swing member 88 between the full line position in Fig. 5, where the printing block 87 is pressed into printing engagement with the label web as it passes over a stationary platen 95, and the dotted line position in Fig. 5 in which block 87 is pressed against an inking pad 96 releasably carried by a stationary bracket 97. Rock shaft 93 carries a gear 98, see Fig. 6, meshing with a gear segment 99 formed on the end of bell crank arm 77, which, as previously described is oscillated by cam 75. The printing device is thus actuated in timed relation with the cutter shear which also is actuated by cam 75, and thus the drum 31 in maintaining the web is registration with the cutter also and simultaneously maintains the web in registration with the printer.

As the label is severed it is positioned in the swinging carrier 62, between spaced plates 100 and 101, the lower edge of the label resting on a spacer 102. Plates 100 and 101 with spacer 102 are secured to an arm 103, Fig. 2, pivoted at an intermediate point on a vertical pivot pin 104. Arm 103 carries a cam roll 105 engaging a cam 106 (Fig. 1) fixed to the lower end of cam shaft 5, roll 105 being held against the cam by a spring

107 tensioned between arm 103 and a pin 108 secured in the frame.

The carrier 62 is in the position shown in Fig. 2 when it receives the severed label, the latter as indicated in broken line extending outwardly beyond the end of plate 101 with its adhesively coated side toward plate 100. A boss 109 is formed on the end of arm 103, in which is rotatably mounted a vertical stub shaft 110 carrying at its upper end a toothed wheel 111. Wheel 111 extending through a slot 112 formed in plate 100 as best shown in Figs. 2 and 11. From the position in Fig. 2, the carrier with its label is swung toward the label applying drum 4 to press the end of the label against the surface of the drum. The surface of the drum is vertically fluted as indicated at 113. The teeth of wheel 111 enter slightly into the flutes 113 (Fig. 12) and since drum 4 is constantly driven as previously described, the label is fed from the carrier 62 and carried by drum 4 over a shoe 114 which softens or activates the heat sensitive adhesive with which the back of the label is coated. As shown in Fig. 10 the cam 106 is so formed as at x to allow the end of the label to be pressed firmly against drum 4 to assure prompt initial feeding of the label, the pressure being relieved slightly at y to assure a smooth and easy advance of the label over the shoe 114. Shoe 114 is carried by a bracket 115, Fig. 1, by means of pins 116 which extend through suitable openings in the bracket. Springs 117 surrounding pins 116 and compressed between the bracket and the shoe yieldingly press the latter toward the drum 4, cotter pins 118 limiting the inward movement of pins 116.

As the drum carries the label beyond the shoe, Fig. 2, it is pressed into adhering contact with the package p being advanced by belt 11. Fingers 119, the ends of which ride in circumferential grooves 120 (Figs. 3 and 5), assure that the label is stripped from the drum. The applied label is held against the package in its further travel by belts 12 until the adhesive sets.

As shown in Fig. 11 drum 4 is provided with a vertical groove 121 positioned to underlie the leading edge of the label. Groove 121 provides an edge over which the edge of the label is slightly bent affording a gripping action which tends to prevent rearward slippage. This inward bending of the label edge is very slight and does not interfere with the operation of strippers 119 and in fact the freedom of the edge of the label over its entire length prevents any tendency of the strippers to dent or tear the edge of the label from impact as would be the case if the label edge were rigidly held at each side of the strippers when the latter first strike the label to direct it in a tangential path.

There is some tendency for toothed wheel 111 to pick up gum from the label, so to free said wheel from any accumulation of gum a scraper blade 122 is mounted on arm 103. Blade 122 is formed with a slot 123 through which the peripheral portion of wheel 111 rotates with a minimum of clearance, thereby removing any excess accumulation of adhesive.

In the normal operation of the machine with an uninterrupted flow of packages to be labeled the machine operates continuously to feed, print, cut and apply a label at each rotation of the cam shaft 5. In the event that the flow of packages is interrupted and no package is presented to receive a label it is desirable that the cycle of the label forming and applying operations be correspondingly interrupted.

As previously stated continuously driven sprocket 8 drives cam shaft 5 through a clutch mechanism. Referring to Figs. 7, 8 and 9, sprocket 8, which is rotatably mounted on cam shaft 5, is shown provided with a vertical driving pin 124 rotatably mounted in the sprocket and cut away at its lower end to provide a portion 125 adapted to engage a shoulder 126 formed in a collar 127 fixed to cam shaft 5. The upper end of pin 124 is provided with a dog 128. A compression spring 129 having one end seated in a recess 130 in collar 127 and the other end seated in a recess 131 formed in the dog 128 tends to maintain portion 125 in driving relation with shoulder 126. A cam 132 secured to the hub of sprocket 8 is formed with a recessed portion 133. A lever 134, see Fig. 2, is pivoted intermediate its ends at 135. One end of lever 134 carries a cam roll 136 urged into engagement with cam 132 by a tension spring 137 connected to the end of lever 134 and a stationary pin 138. The opposite end of lever 134 is provided with a feeler finger 139 which in the presence of a package or article in position on conveyor 11 to receive a label in the ensuing cycle of the machine engages such article and prevents cam roll 136 from entering recess 133. In the event a package or article is absent from such position cam roll 136 enters the recess 133 under the action of spring 137. Lever 134 carries a trip member 140 which, when roll 136 is permitted to enter recess 133, is positioned in the path of dog 128 to rock the latter and swing portion 125 out of engagement with shoulder 126, as shown in Fig. 9, thereby releasing sprocket 8 from the cam shaft. Sprocket 8 and cam 132 continue to rotate, roll 136 riding out of the recess 133 to release dog 128 from trip 140 after portion 125 has passed shoulder 126. Portion 125 rides on the surface of collar 127 and upon completing its revolution will again engage shoulder 126 if feeler 139 finds a package or article in position to be labeled, otherwise dog 128 will again engage trip 140. Sprocket 8 will thus remain stationary unconnected to shaft 5 until feeler 139 finds a package in position.

When the labeling device is attached to the delivery of a wrapping or packaging machine it is sometimes desired to permit a series of packages to pass the labeler without receiving labels. For this purpose a manually operated trip is provided in the form of a finger 141 carried by a block 142 which is pivoted at 143 to a bracket 144. Block 142 is adapted to be swung from its full line inoperative position in Figs. 2 and 8 to the dotted line position in the latter figure, in which position finger 141 is positioned in the path of dog 128 to trip the clutch at each successive rotation of sprocket 8, thereby preventing rotation of shaft 5 and rendering the label forming and applying mechanism inoperative until trip finger 141 is manually returned to inoperative position. A spring actuated pin 145 engaging in openings 146 or 147 formed in bracket 144 releasably retains the finger 141 in its inoperative or operative position respectively.

Preferably clutch collar 127 is connected to shaft 5 through an overload release mechanism best shown in Figs. 7 and 10. As there shown an annular member 148 is keyed to the lower end of collar 127 at 149. Below member 148 a hub 150 which carries cam 106 previously described is splined to shaft 5 at 151. Hub 150 carries a pivot pin 152 upon which is pivoted a bar 153 which is held against a slabbed off surface 154 on member 148 by a relatively strong tension spring 155 con-

necting the free end of bar 153 to a pin 156 carried by hub 150. As will be apparent, in the event that the load on shaft 5 becomes excessive spring 155 will yield to permit bar 153 to ride off of the surface 154 and permit clutch collar 127 to rotate and thereby relieve shaft 5 from the driving torque.

Where it is desired to apply a label to opposite ends of the package the mechanism above described may be duplicated on the opposite side of the belt 11. In any event the surface speed of the label applying drum or drums is approximately the same as the speed of advance of the article as it passes the drum so that there is no relative movement between the drum, label and package during the applying operation.

What I claim is:

1. A machine for severing and applying labels to packages which comprises, a roll for applying labels to a face of a package, means to rotate said applying roll, a pair of drawing rolls for advancing a label web, a label carrier pivoted for swinging movement, said carrier in one position of its swinging movement being positioned to receive a leading end portion of the label web advanced beyond said drawing rolls, means between the drawing rolls and the carrier to sever the so-extending portion of the web to form a label and means to swing the carrier with the severed label therein from its last-named position to bring an edge of the label into engagement with the applying roll to be frictionally advanced thereby into contact with the package.

2. A machine for severing labels from a web coated with heat activated adhesive and applying the labels to packages which comprises, a roll for applying labels to a face of a package, means to rotate said applying roll, means for advancing a label web, an oscillating label carrier, said carrier in one position of its movement being positioned to receive the leading end portion of the web, means to sever said portion to form a label, means to move the carrier with the severed label therein from its last-named position to bring the non adhesive side of an edge portion of the label into frictional feeding engagement with the rotating applying roll to be advanced thereby into contact with the package, and a heated member between which and the roll the label is advanced prior to its engagement with the package to activate the adhesive on the exposed face of the label.

3. A machine for severing and applying labels to packages which comprises, a roll mounted for rotation about a vertical axis, for applying labels to a face of a package, means to rotate said applying roll, a pair of drawing rolls for advancing a label web, a label carrier pivoted for swinging movement in a plane at right angles to the direction of feed of the drawing rolls and about an axis parallel to the axis of rotation of the applying roll, said carrier in one position of its swinging movement being positioned to receive a leading end portion of the label web advanced beyond said drawing rolls, means between the drawing rolls and the carrier to sever the so-extending portion of the web to form a label, and means to swing the carrier with the severed label therein from its last-named position to bring a vertical side edge portion of the label into frictional feeding engagement with the applying roll.

4. A machine for severing and applying labels to packages which comprises, a roll for applying labels to a face of a package, means to rotate said applying roll, a pair of drawing rolls for advancing a label web, a label carrier pivoted for swinging movement, said carrier in one position of its swinging movement being positioned to receive the leading end portion of the label web advanced beyond said drawing rolls, means between the drawing rolls and the carrier to sever the so-extending portion of the web to form a label, means to swing the carrier with the severed label therein from its last-named position to bring an edge portion of the label into engagement with the surface of the applying roll, and a freely rotatable roll mounted adjacent the edge of the carrier to press said edge portion of the label into frictional feeding engagement with the applying roll to be drawn thereby from the carrier and advanced into contact with the package.

5. A machine for severing and applying labels to packages which comprises, a roll for applying labels to a face of the package, means to constantly rotate said applying roll, a pair of drawing rolls for advancing a label web, a constantly driven shaft, means for intermittently driving said drawing rolls from said constantly driven shaft, cutting means to sever a leading end portion of the web advanced by and beyond said drawing rolls to form a label, a cam constantly driven from said constantly driven shaft for actuating said cutting means, a pivoted carrier for transporting the severed label from the cutter to said applying roll and cam means carried by said constantly rotating shaft for actuating said carrier.

6. A machine for severing and applying labels to packages which comprises, a roll for applying labels to a face of a package, the surface of said roll being formed with a multiplicity of axially extending flutes, means to rotate said applying roll, a pair of drawing rolls for advancing a label web, a label carrier pivoted for swinging movement in a plane at right angles to the direction of feed of the drawing rolls, said carrier in one position of its swinging movement being positioned to receive a leading end portion of the label web advanced beyond said drawing rolls, means between the drawing rolls and the carrier to sever the so-extending portion of the web to form a label, means to swing the carrier from its last-named position to bring an edge portion of the label into engagement with the surface of the applying roll and a member supported by the carrier to superficially press the label into the flutes on the applying roll to cause the label to be drawn from the carrier by the applying roll and advanced thereby into contact with the package.

7. A machine for severing and applying labels to packages which comprises, means for applying labels to a face of a package, a pair of drawing rolls for advancing a label web, cutting means to sever a leading end portion of the web advanced by and beyond said drawing rolls to form a label, means engaging the web rearwardly of the drawing rolls to cause a predetermined slippage of the web relative to the drawing rolls to maintain successive predetermined portions of the web in registration with the cutting means, and a carrier for transporting the severed label from the cutter to the applying means.

8. A machine for severing and applying labels to a package which comprises, rotary means for applying labels to a face of a package, a pair of drawing rolls for advancing a label web, cutting means to sever a leading end portion of the web advanced by and beyond said drawing rolls to form a label, registration means engaging the

web rearwardly of the drawing rolls to cause a predetermined slippage of the web relative to the drawing rolls to maintain successive predetermined portions of the web in registration with the cutting means, a pivoted carrier for transporting the severed label from the cutter to the applying means, a shaft, means to constantly rotate said shaft and said applying means, a common drive for intermittently operating said drawing rolls and said registration means, and a one revolution clutch connecting said common drive to said shaft and means to disengage the clutch in the absence of packages to be labeled.

9. In a machine for severing labels from label webs having longitudinally spaced openings therein, which webs are to be severed on lines having a predetermined position relative to said opening, a pair of drawing rolls frictionally engaging the opposite faces of the web to advance the latter, means for driving said rolls, a drum around which the web is drawn by the rolls, circumferentially spaced pins extending from the surface of the drum of less diameter than said

openings to loosely engage in the web openings, the bases of the pins being spaced from each other a distance slightly less than the spacing of the web openings they are to enter, web severing means positioned to sever a label from the web at a point beyond the drawing rolls and means to drive the drum at a surface speed less than that of the drawing rolls whereby the trailing edge of the web openings are brought into contact with said pins to reduce the speed of web travel to that of the drum and bring the web openings into predetermined registering relation with the cutter.

WILLIAM HOPPE.

REFERENCES CITED

The following references are of record in the file of this patent:

UNITED STATES PATENTS

Number	Name	Date
1,543,434	Hardman	June 23, 1925
2,266,087	Schlemmer	Dec. 16, 1941