July 31, 1956 F. L. RIEGER ET AL 2,756,674

INKING SYSTEM FOR AUTOMATIC MARKING MACHINES

Filed Nov. 15, 1952 2 Sheets-Sheet 1

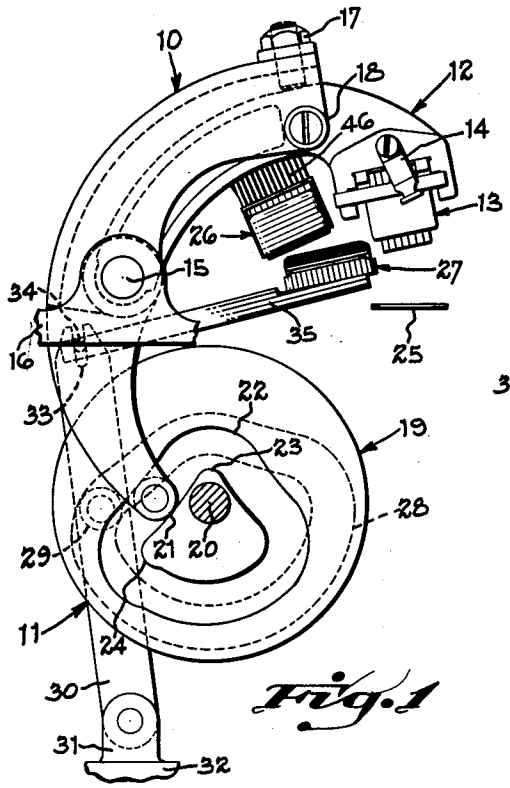

Fig. 1

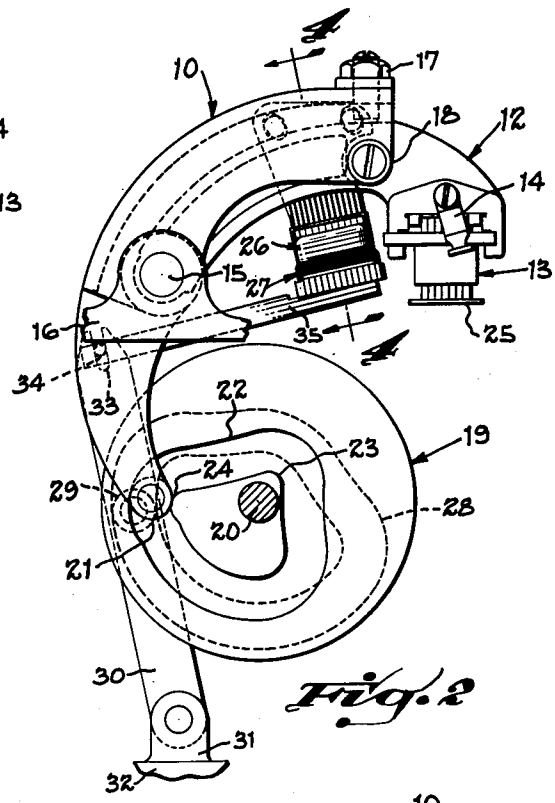

Fig. 2

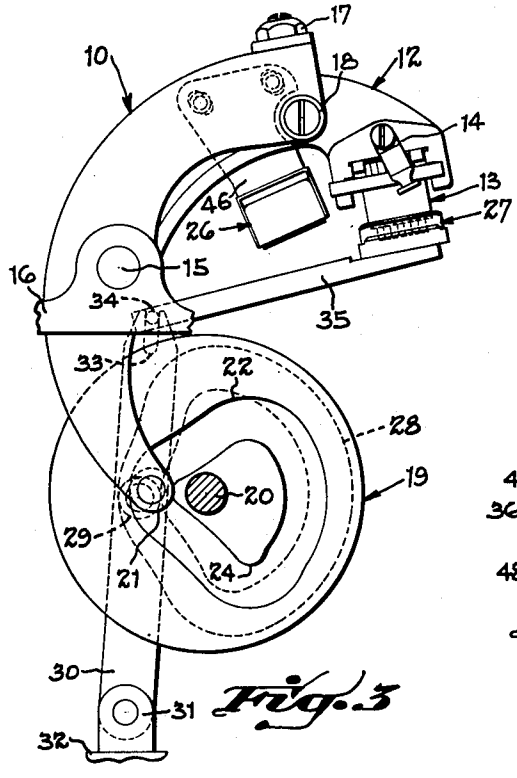

Fig. 3

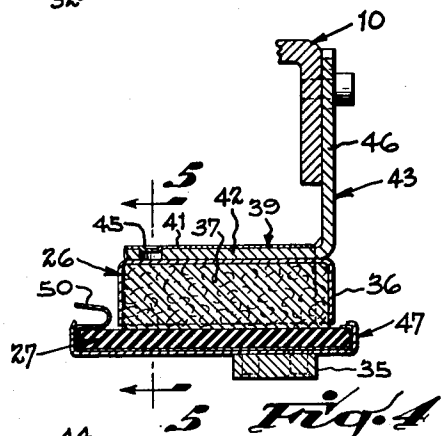

Fig. 4

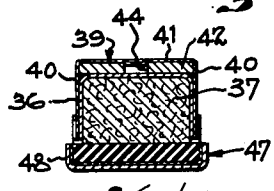

Fig. 5

INVENTORS.
Frederic L. Rieger.
BY Raymond M. Slade.
Wood, Herron & Evans.
ATTORNEYS.

July 31, 1956 F. L. RIEGER ET AL 2,756,674

INKING SYSTEM FOR AUTOMATIC MARKING MACHINES

Filed Nov. 15, 1952 2 Sheets-Sheet 2

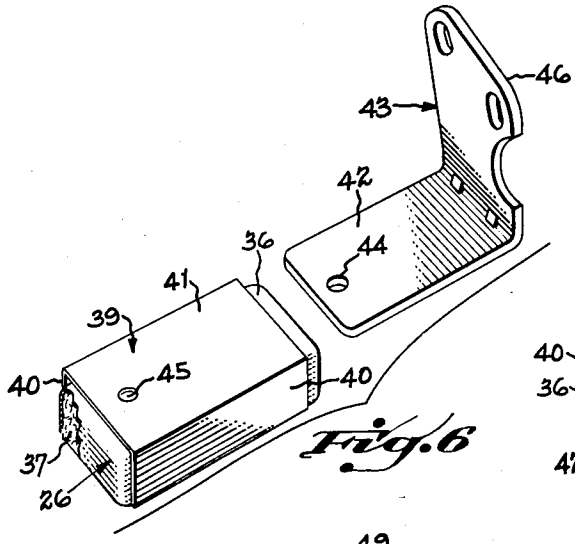

Fig. 6

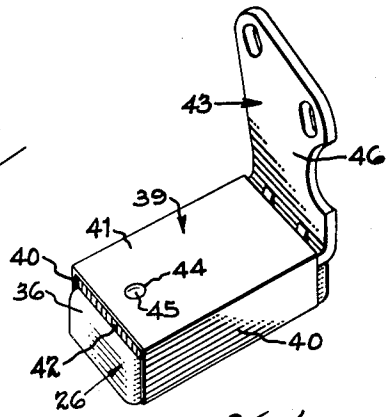

Fig. 7

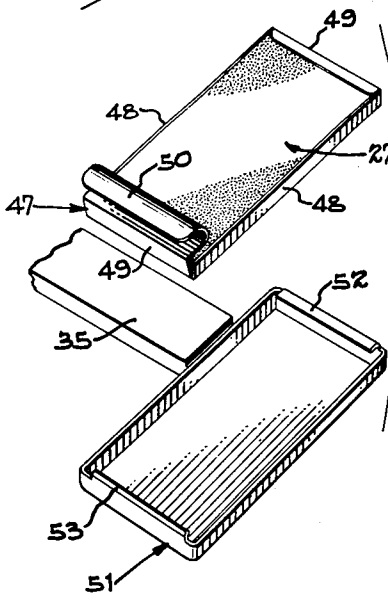

Fig. 8

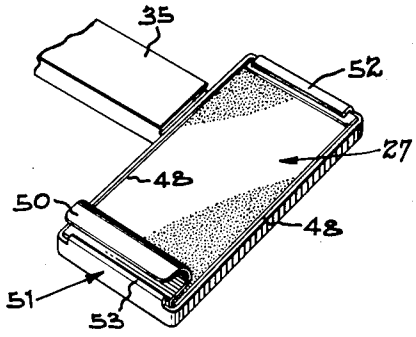

Fig. 9

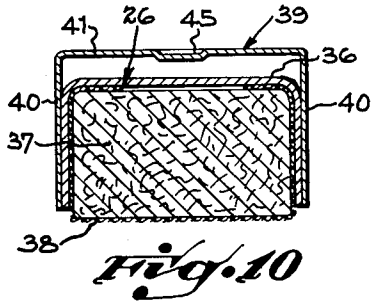

Fig. 10

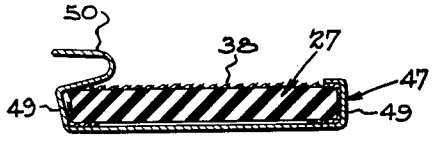

Fig. 11

INVENTORS.
Frederic L. Rieger.
BY Raymond M. Slade.
Wood, Herron & Evans
ATTORNEYS.

United States Patent Office

2,756,674

Patented July 31, 1956

2,756,674

INKING SYSTEM FOR AUTOMATIC MARKING MACHINES

Frederic L. Rieger, Dayton, and Raymond M. Slade, Tipp City, Ohio, assignors to The Monarch Marking System Company, Dayton, Ohio, a corporation of Ohio

Application November 15, 1952, Serial No. 320,768

3 Claims. (Cl. 101—301)

This invention relates to automatic marking machines in which type is employed for printing prices and other indicia on tags, tickets and labels. More particularly, the invention is directed to a new method and means for inking the type employed in these machines. Heretofore, ribbon devices have been used for this purpose. It is the broad objective of the present invention to provide a better, longer lasting, and more economical means.

It has been found that a ribbon of good quality can be used to print between sixty and sixty-five thousand tags before the impressions become so light that they are difficult to read. By contrast, the inking means or system of the present invention has been tested in a run of approximately one million tags and the impression on the last tag of the run found to be sharp and clear, comparing favorably with tags printed by a new ribbon. Thus, the absolute upper limit of the number of tags which can be printed by the present inking system has not been determined to date.

The experimental run referred to was made over a period of several months, the machine being run intermittently during that time to approximate marking room conditions. Toward the latter part of the run it was found that the tags printed at the start of a day were appreciably darker than those printed at the end of the previous day. That is, the system rejuvenated itself overnight while it was not being used. This phenomenon, of the system rejuvenating itself with rest, should be even more apparent in prolonged marking room use, because in such use there are frequent intervals when a machine is shut down for several days at a time.

Collaterally with the broad objective set forth, it is also an objective of the invention to provide a new inking system for automatic marking machines which is adapted to be installed in a majority of the presently existing machines in place of ribbon inking devices without the necessity of making substantial changes in the design or disposition of the machine parts.

The operation of modern marking machines is cyclic in nature and follows substantially the same general pattern. Tags, tickets or labels in strip form are fed across a table or a guideway to a printing station where they are impressed by type which is carried in a reciprocating printing head or the equivalent. In some machines the tags etc., are impressed through a ribbon, that is, it is the ribbon which actually contacts the tag. In others, a ribbon is used to carry ink to the type, and it is the type itself which makes contact with the tag. The latter method results in cleaner, sharper markings. Where a ribbon is interposed between type and tag, the texture print of the ribbon material is noticeable and the print outlines are fuzzy. The direct method is utilized in the present system.

The movement through the machine is an intermittent one in which the strip is advanced a tag, ticket or label unit at a time to the printing station. The means used for advancing the strip usually comprises feed fingers or their equivalent having a reciprocating motion which takes

place in timed sequence relative to the reciprocating movement of the printing head. In those machines in which a ribbon is used to carry ink to the type, the ribbon mechanism may operate simultaneously with the strip feed means, being moved into type inking position by the same drive means. If this is not done, then auxiliary means are employed for moving the ribbon into and out of inking relationship with the type. In those machines printing through the ribbon, there is no need to have the ribbon reciprocate back and forth between two positions. However, there are cyclically operating parts with which the elements of the present invention may be associated. Generally speaking, the elements may be associated respectively with the printing head and the feed fingers; the printing head and another reciprocating part adjacent the printing head; or each element may be associated with any of the parts adjacent the printing station which move in timed sequence with the printing head. Of course, special mounts and drive linkage may be utilized. But, in any event, elaborate engineering changes in a majority of the present machines are not necessary to accommodate the elements of the system.

Only two elements are required, and it is preferred that they be provided and installed as a set. One of the elements comprises a reservoir assembly which holds a substantial supply of ink. In the preferred embodiment, the reservoir itself is constituted by a rectangular block of ordinary felt. The other element comprises a transfer pad which is designed to be mounted so that it reciprocates between the reservoir and the type, taking ink from the reservoir and depositing it on the type. Both the reservoir and the transfer pad are charged initially with an ink supply. The transfer pad may comprise felt or other absorbent material which is covered with fine texture cloth, however, it is preferred that it be made of microporous rubber. Preferably, both elements of the system are provided in cartridge form. Snap-in mounting means are provided for both of the cartridges so that they may be installed and removed easily. The respective mounting means are arranged so that the transfer pad contacts the underside of the reservoir and removes ink from its lower surface. There is thus a gradual decrease in the amount of ink in the reservoir. The pad on the other hand is resupplied from the reservoir after each contact with the type, and therefore, its supply of ink remains substantially constant until the reservoir supply is exhausted. This insures unchanging conditions in the ink supply directly available to the type over substantially the entire useful life of a set of elements. In other words, a gradually decreasing supply of ink in the system is not reflected in the amount of ink that is available to the type until the large quantity in the reservoir is substantially exhausted. Thus, the operator of a machine is insured that the tags printed in a machine from day to day over an unusually long period are substantially identical in appearance; whereas in the past, where a ribbon system was employed, the print gradually became lighter during the comparatively short life of the ribbon.

In a majority of installations, the reservoir element can be fastened to the side of the printing head, and the transfer pad associated with, or at least tied-in with the movement of, the strip advance means. Since the strip advance means must operate at a time when the printing head is clear of the strip, the transfer pad can, therefore, move under the head to ink the type simultaneously with the movement of a new tag into its position under the head. By the same token, when the strip advance means retract to pick up the next tag, the transfer pad can move with it out from under the printing head to a position under the reservoir at the side of the head for a new supply of ink.

Both the ink reservoir and the transfer pad are com-

paratively small elements which are simple in design and construction. A ribbon inking device, by way of contrast, requires special indexing mechanism to feed fresh sections of the ribbon into position for contact with the type. The ribbon and its indexing mechanism take up a considerable amount of space at the most crowded point in a machine. From the view point of simplicity in machine design, therefore, the present system is more compact than ribbon devices.

It is preferred that the cartridges be supplied to the user with the ink supply already in them and that both of the cartridges be thrown away when the reservoir is exhausted. The two elements are adapted to be manufactured so economically that it is practical, particularly in view of their long life, to simply replace them with new ones. There are other reasons however. Proper re-inking is an exacting task. The difference between too little and too much is a surprisingly small amount. With ribbon systems it has been found that the tendency is to over-ink. This can be a costly mistake because of the possibility of excessive ink on a ticket offset printing onto merchandise. Then too, the ink bottles themselves are a hazard in a marking room. In fact, a number of large department stores have made a set rule against re-inking and require that ribbons be replaced rather than run the risk of having ink bottles in their marking rooms. However, even with such a rule, it is impossible for an operator to change a ribbon without getting some ink on his fingers, which means a delay while he washes his hands so that it is safe for him to handle garments or other merchandise again. The manufacturer or supplier is in a far better position than a machine operator to know the correct amount of ink to use in charging the cartridges initially. The amount, of course, depends upon the size of the cartridges and the types of materials chosen, but can be quickly arrived at by experimentation.

The combination of supplying disposable cartridges which are already charged with ink and adapted to be snapped into place in the machine means that they can be replaced by an operator quickly, easily and without touching an inked surface. The ease with which the cartridges are adapted to be replaced makes it feasible for department stores to make frequent changes in the color of the ink being used in their machines. For one thing, different price ranges can be indicated in different colors of ink. Also periodic changes in ink color may be used to assist in inventory control. In addition, appropriate colors may be selected for seasonal sales, and different colored inks used for different departments throughout the store.

Other objects and advantages of the invention will be apparent to those skilled in the art from the following detailed description of the drawings, in which:

Figures 1–3 show progressive positions of a printing arm and head, including the driving means, of a typical automatic price marking machine incorporating the inking system of the present invention.

Figure 4 is a fragmentary cross sectional view taken on the line 4—4 of Figure 2.

Figure 5 is a cross sectional view taken on the line 5—5 of Figure 4.

Figure 6 is a perspective view of an inking reservoir cartridge and a mounting bracket.

Figure 7 is a perspective view similar to Figure 6 showing the cartridge mounted on the bracket.

Figure 8 is a perspective view showing a transfer pad and transfer pad carrier.

Figure 9 is a perspective view similar to Figure 8 showing the transfer pad in place in the carrier.

Figure 10 is a cross sectional view of a modified form of the inking reservoir.

Figure 11 is a cross sectional view of a modified form of the transfer pad.

Installation in general

Figures 1 through 3 show a portion only of an automatic marking machine in which the inking system of this invention is adapted to be installed. For a more complete disclosure of a machine of this type see U. S. Patent No. 1,971,963. The portion of the machine shown is intended to be representative only of automatic marking machine constructions in general. It is believed that the adaptation of the present system to other marking machines will be apparent to those skilled in the art.

Generally speaking, automatic marking machines operate cyclically, with each cycle simply being a repetition of the one preceding it. Usually each cycle involves the feeding of a tag to a printing head, the actual printing of the tag, and then the discharge of the tag. The printing faces of the type can be inked at any time that they are not impressing a tag. For the most part, it has been found expedient to ink the type at the same time in the cycle that a new tag is being fed into printing position. This is done in the machine disclosed in U. S. Patent No. 2,310,179; however, the type is inked by a ribbon mechanism in the disclosure. As will be seen from a study of this patent, the ribbon requires rather complex indexing mechanism to insure that a fresh surface is being constantly fed to the type. The disclosure of this patent is an example of the sort of ribbon inking system that the present system is intended to replace.

Specifically, the portion of the marking machine shown in Figures 1–3 includes a printing arm **10**, arm driving means **11** and a printing head **12**. The head has a type chase **13** slidably mounted therein and mounts a swinging latch **14** for locking chase **13** in place. In the instance shown, both the printing arm and printing head are pivotally mounted on a shaft **15** which is journaled in the bed of the machine, a portion only of which is indicated at **16**. The common pivot at shaft **15** is provided so that the printing head may be made adjustable relative to the arm **10**. This is done in order to provide means for varying the impression made by the type. The means employed comprise a set screw **17** and a lock device **18**.

The head is driven through arm **10** by means of a cam **19** keyed to a drive shaft **20** which is located inside the machine. A cam roller **21** at the lower end of the printing arm **10** is designed to ride in a cam track **22**. As will be seen from the shape of cam track **22**, the printing head lowers twice during each cycle of the machine; the first time at point **23** in cam track **22** where it descends a slight amount for inking purposes and again at point **24** where it descends all of the way for impressing a tag, one of which is indicated diagrammatically only at **25**.

In the machine shown, it is found expedient to mount an ink reservoir assembly **26**, which constitutes one part of the present system, directly upon printing arm **10**. It is also found expedient to tie-in directly the movement of an ink transfer pad assembly **27**, constituting the second part of the present system, with the movement of the printing head. This is done by providing a second cam track **28** on cam **19** in the face opposite cam track **22**. A cam roller **29** rides in the second cam track. This roller is journaled at the side of a swinging lever **30** which is pivotally journaled at its lower end in a bracket **31** mounted upon the base of the machine, a portion of which only is shown at **32**. The upper end of swinging lever **30** is forked at **33** and engages a pin **34**. This pin is secured to a transfer pad carriage **35** which is slidably mounted in a guideway (not shown) formed in the frame of the machine. The cam track **28** is designed to move the transfer pad carriage between the position shown in Figure 2 and the position shown in Figure 3. In the first position, the transfer pad is below the ink reservoir assembly **26** so that the two contact one another during that portion of the operating cycle when tag **25** is

being impressed. In the latter position the pad is beneath the type chase so that when the printing head lowers slightly, as a result of cam roller **21** being at point **23** in the cam track, contact is made between the pad and type. Thus, in each cycle the ink supply on the pad is replenished at the reservoir **26** and a fresh film of ink deposited upon the type.

In substance, the elements of the present system are adapted for use in any automatic marking machine having cyclically operating reciprocating parts such as the printing head of the machine shown in the drawings. Therefore, it will be seen that the system is not limited in use to a machine designed especially for it, but may be installed in existing machines to replace ribbon mechanisms. The only practical limitations arise through the need for synchronizing the movement of the transfer pad with the movement of the printing head. In some machines, for example the one disclosed in U. S. Patent No. 2,313,347, the transfer pad is adapted to be associated with the feed finger mechanism, and arranged so that it moves into type inking position each time a new tag is fed into printing position. The reservoir cartridge assembly **26** under these circumstances is placed upon the printing head, but at the side adjacent the feed finger mechanism.

Ink reservoir

It is preferred that the ink reservoir be provided in disposable cartridge form for several reasons. From a cost standpoint, the inexpensive construction of the reservoir cartridge and its exceedingly long life make disposal of exhausted cartridges economically practical. In addition, it is believed that the manufacture is in a better position than a machine operator to know the optimum amount of ink that should be used in charging a cartridge. The disposable cartridge feature of the system also does away with the need for having bottles of ink in a marking room where they are likely to be tipped over and ruin merchandise. Then too, the cartridge, being small, may be readily packed in an air tight container so that the ink will remain fresh until ready for use.

The ink cartridge disclosed in the drawings comprises an inverted, rectangular cup **36** in which a block of felt **37** is secured by adhesive. The lower face of the felt block **37** depends slightly below the lower rim of the cup where it may be contacted by the ink pad of assembly **27**. The felt block may be covered by silk or other material of a type which is not likely to produce lint. This material may be similar to that used for making inking ribbons. An example of a covering of this nature is shown in Figure 10 of the drawings, being indicated by the numeral **38**.

A U shaped strap **39** is secured to the cup **36**. The strap includes a pair of side walls **40—40** which are spot welded to the opposite side walls of cup **36** and a top wall **41**, which defines with the top of cup **36**, a slot for receiving a horizontal leg **42** of a mounting bracket which is indicated generally at **43**. In the present instance, the leg **42** of the bracket has a hole **44** in it near its outer end. Hole **44** is designed to receive a dimple **45**, which is formed within the upper wall **41** of the strap portion of the ink cartridge, in snap-fit relation to provide detent means for holding the cartridge onto the bracket. In the instance shown in Figures 1–3, the bracket has a vertical leg **46** which is bolted to the side of printing arm **10**. In price marking machines of different design, the mounting bracket construction may have to be altered in order to adapt it to a particular mount.

Inking pad

The preferred material for the pad is micro-porous rubber of the type disclosed in U. S. Patent No. 2,353,877. The reasons for the preference will be pointed out below under the sub-heading "Materials and Operation." The pad is rather shallow and rectangular in outline being slightly wider and longer than the felt block **37**. The pad is cemented into a thin metal tray **47**, which is in the nature of a shallow box having side walls **48—48** and end walls **49—49**. The forward end wall includes an extension **50** which provides means for handling the tray when it is being installed or changed. The handle shown is formed by bending the extension of the forward end wall back over the rubber pad, then curving it upwardly and forwardly. At the back of the pad, an extension of the end wall is bent at a right angle over the edge of the pad. The four corners of the tray are not fastened, this being found unnecessary. The pad and tray are mounted as an assembly within a box-like carrier **51** which may be welded or otherwise fastened to the carriage member **35**. The rear wall of carrier **51** has a flange **52** along its upper edge which is turned forwardly at approximately 90 degrees. The upper edge of the front wall of the carrier includes a lip, indicated at **53**, which is bent inwardly at approximately 45 degrees. The flange **52** at the rear of the carrier is designed to overhang the rear edge of the pad tray, whereas the lip **53** is designed to engage the forward end wall of the pad tray below handle **50** in snap-fit relation to lock the tray in place within the carrier. To remove the tray, the handle **50** is sprung rearwardly to release the front end wall from lip **53**.

Materials and operation

As long as a cover of the type shown in Figure 10 at **38** is utilized for the ink reservoir cartridge the quality of the felt utilized for the block **37** is unimportant. It is found that the cheapest felt may be used, for example, that which is employed for padding shipping cartons. The ink capacity of the block is the more important factor, the material from which it is made is of secondary importance, it being anticipated that materials other than felt may be employed in the system. The material used for the ink transfer pad on the other hand is important, the microporous rubber mentioned above being preferred.

This material has been used by itself as a printing plate (U. S. Patent No. 2,427,765). In this use the ink is fed into the pad from the back and migrates to the face of the pad by capillary action. The feeding of the ink to the face of the pad by this method is too slow, however, to be practical in an automatic marking machine which often runs at a speed of approximately 100 impressions per minute. In the present system, the micro-porous pad is charged with ink before it is installed. It is suggested that the pad be charged by the manufacturer like in the case of the reservoir and the two provided as a disposable unit. The amount of ink required in the pad is less than that which would cause the pad to become saturated. The exact amount can be determined easily by simple experimentation.

If desired, a different type of pad, for example one made of felt and covered with silk, may be employed but the results obtained are not nearly as satisfactory as with the micro-porous rubber pad. For one thing, there is a tendency for the type characters to pick up the thread pattern of the cloth cover and impress it upon tags. This is particularly noticeable when the ink supply is running low. When large type characters are being used, the thread pattern is not particularly objectionable; but, when small type is employed, 4 to 6 point for example, the thread pattern becomes obvious and makes reading of the fine print difficult.

The ink film applied to the type by a micro-porous rubber pad is even and no texture pattern can be seen on the type. This is primarily a result of the surface characteristics of the material. The holes or surface indentations on the face of a pad of micro-porous rubber are so tiny that they do not cause a break in the film of ink. Also, there seems to be a migration of ink on the surface of the pad due to the slight squeezing action which results from the type hitting the pad repeatedly. The surface tension of the ink may also contribute to

the evenness of the film on the pad. In any event, texture patterns are not found on tags printed with type inked by an almost dry micro-porous rubber pad. Even though the surface of the reservoir block is exceedingly rough and should thereby cause a texture pattern of ink to be deposited on the pad, such pattern is not transferred to the type, possibly due to the noted migration of the ink within and on the surface of the pad. Oddly enough, the performance of a micro-porous rubber pad is improved by covering it with thin ribbon material (see Figure 11) and the texture pattern referred to above in connection with a felt pad does not appear as long as the pad has an adequate supply of ink.

The ink within the reservoir block is always removed from the bottom where it naturally tends to migrate. On the other hand, ink is removed from the top of the transfer pad, but only after it receives a new film. As a practical matter, the amount of ink within the pad tends to remain substantially constant and dispersed evenly throughout the pad, that is, it does not tend to migrate to the bottom like it does in the felt block. Thus, the operation of the system in its simplest form is one of replenishing a surface supply on the transfer pad after each contact between the pad and type. In other words, the ink that it removed from the top of the pad is replaced at the top so that the supply available to the type is always constant.

A micro-porous pad used alone, that is without the reservoir, which is charged with an initial supply of ink will operate for printing a surprising number of tags in a slow run, but the darkness of the impressions on the tags decreases rapidly and varies in intensity over the run. The reservoir cartridge, of course, holds a much greater amount of ink than is possible to place in the pad. The useful life of the two together is increased accordingly and the amount of ink supplied to the type does not vary in a fast run.

Neither the pad nor the reservoir need be filled with ink to the absolute saturation point when they are charged initially. Perhaps the percentage of ink in both the reservoir and pad decrease together in the latter part of the useful life of the two, but up to a certain point, at least, the reservoir ink supply only is used and thus it decreases while the ink supply remains substantially constant in the pad. This is undoubtedly the result of the tendency for the ink in the felt block reservoir to migrate toward the bottom surface while the ink in the micro-porous pad tends to remain in evenly dispersed condition.

There are certain relationships which should be maintained in installing the system in a marking machine. The cycle of the reciprocating member which carries the inking pad should be such that the pad does not remain in contact with either the reservoir or the type for more than an instant. In other words, there should be no "dwell" during either pad contact. The contact between pad and reservoir should be light, so as to not squeeze ink out of the felt block; that is, the ink should be lifted off—not forced out. Also, the pad and block should meet squarely so that there is even contact between the respective surfaces. The same is true when the pad contacts the type. The transfer of the ink film from the pad to the face of the type is substantially instantaneous upon contact. Thus, the pad need only "kiss" the type. The type should not indent the pad appreciably. A slight disturbance of the surface of the pad does, however, tend to keep the ink throughout the pad within a constant level of dispersion.

Having described our invention, we claim:

1. The method of inking the type in an automatic marking machine comprising bringing an ink absorbent pad having a supply of ink therein into momentary facial contact with the lower surface of an ink absorbent block having a supply of ink therein, thereby depositing a film of ink upon the surface of said pad, and moving said pad from said block and into momentary facial contact with the face of said type thereby depositing said film on said type.

2. A method of inking the type in an automatic marking machine comprising the successive steps of bringing a pad of micro-porous rubber having a supply of ink therein into momentary facial contact with the lower surface of a block of ink absorbent material having a substantially greater supply of ink therein, thereby depositing a film of ink upon the upper surface of said pad, moving said pad from said block and bringing the upper face of said pad into momentary facial contact with the face of said type, whereby said film of ink is transferred to said type.

3. In an automatic marking machine having a drive shaft which operates cyclically, a printing head carrying type, and means operatively connecting the printing head to the drive shaft, means for inking the type comprising an ink reservoir assembly including a block of ink absorbent material having a flat face, said block being capable of holding a substantial supply of ink and being mounted on the printing head with a flat face of the block presented downwardly, an ink transfer pad, said ink transfer pad being substantially thinner than the block and being capable of holding a lesser supply of ink, a reciprocably mounted carriage, said transfer pad mounted upon said carriage and presenting a flat face upwardly, cam means operatively connecting said drive shaft to said carriage to reciprocate said carriage in timed sequence with respect to the operation of the printing head for moving said transfer pad between a position in which it makes light momentary facial contact with the underside of said reservoir to renew the ink supply on the surface thereof and a position in which it makes light momentary facial contact with the underside of the type carried in said printing head to deposit ink thereon.

References Cited in the file of this patent

UNITED STATES PATENTS

763,873	Fox	June 28, 1904
1,987,802	Ryan	Jan. 15, 1935
2,310,179	Kohnle	Feb. 2, 1943
2,427,765	Chollar	Sept. 23, 1947
2,562,627	McKay	July 31, 1951
2,584,908	Oblinger	Feb. 5, 1952
2,689,525	Anker et al.	Sept. 21, 1954