United States Patent [19]

Cobaugh et al.

[11] **3,850,500**

[45] **Nov. 26, 1974**

[54] **STAMPED AND FORMED POST AND MINIATURE SPRING RECEPTACLE**

[75] Inventors: **Robert Franklin Cobaugh; Jay Merlin Heisey,** Elizabethtown, both of Pa.

[73] Assignee: **AMP Incorporated,** Harrisburg, Pa.

[22] Filed: **Sept. 11, 1972**

[21] Appl. No.: **288,852**

Related U.S. Application Data

[63] Continuation of Ser. No. 93,204, Nov. 27, 1970, abandoned.

[52] **U.S. Cl.** ..... **339/258 R,** 339/17 C

[51] **Int. Cl.** **H01r 13/12**

[58] **Field of Search** 339/17, 176, 192, 221, 339/258, 259

[56] **References Cited**

UNITED STATES PATENTS

3,192,498	6/1965	Ruehleman	339/33
3,262,088	7/1966	West	339/220 R X
3,369,212	2/1968	Coldren et al.	339/258 R X
3,434,094	3/1969	Walter	339/258 R X
3,555,497	1/1971	Watanabe	339/258 R
3,601,782	8/1971	Vlijmen et al.	339/176 MP X
3,602,875	8/1971	Pierini	339/17 CF X
3,673,551	6/1972	McDonough	339/258 R
3,685,001	8/1972	Krafthefer	339/17 CF X

FOREIGN PATENTS OR APPLICATIONS

1,490,561	4/1969	Germany	339/258 F

Primary Examiner—Paul R. Gilliam
Assistant Examiner—Lawrence J. Staab
Attorney, Agent, or Firm—Gerald K. Kita

[57] **ABSTRACT**

A unitary post and receptacle having at least one depending post and spaced longitudinal spring legs. The end portions of the legs are laterally flared and one of the legs is provided with spaced sidewall portions which are parallel or laterally flared. Together, the flared spring legs and sidewall portions define a tapered receptacle extending between the legs. A tab on one of the sidewall portions partially overlies one of the legs.

2 Claims, 14 Drawing Figures

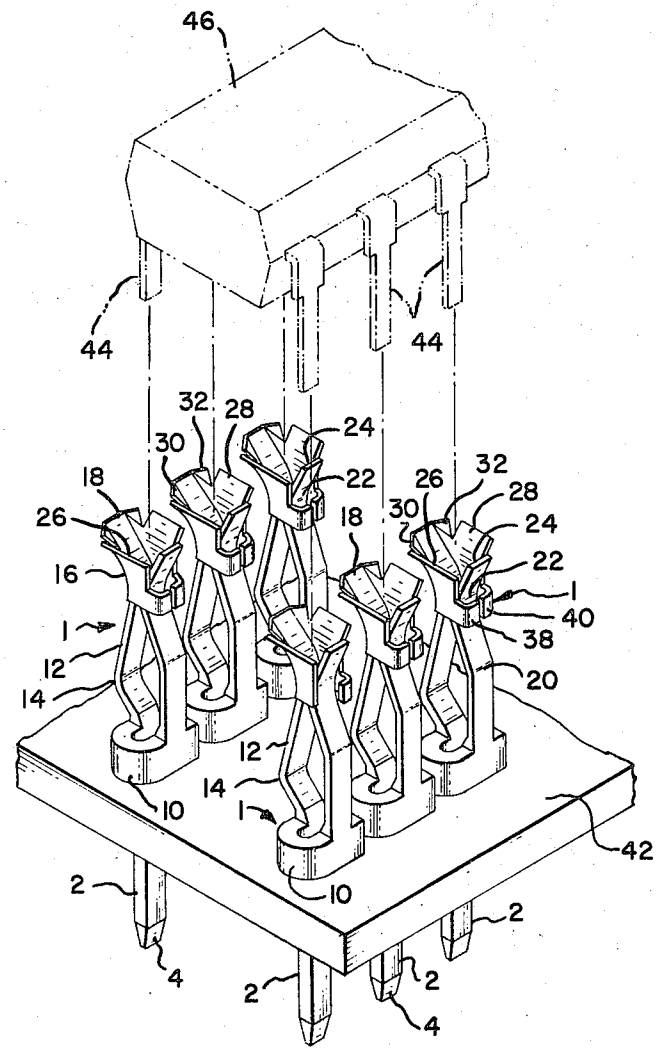

Fig. 1

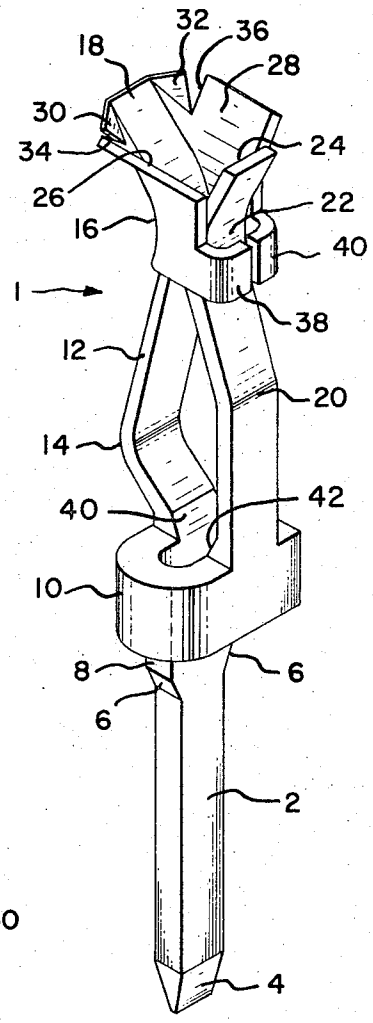
32
36
18
28
30
24
34
26
22
16
40
1
38
12
20
14
42
40
10
8
6
6
2
4

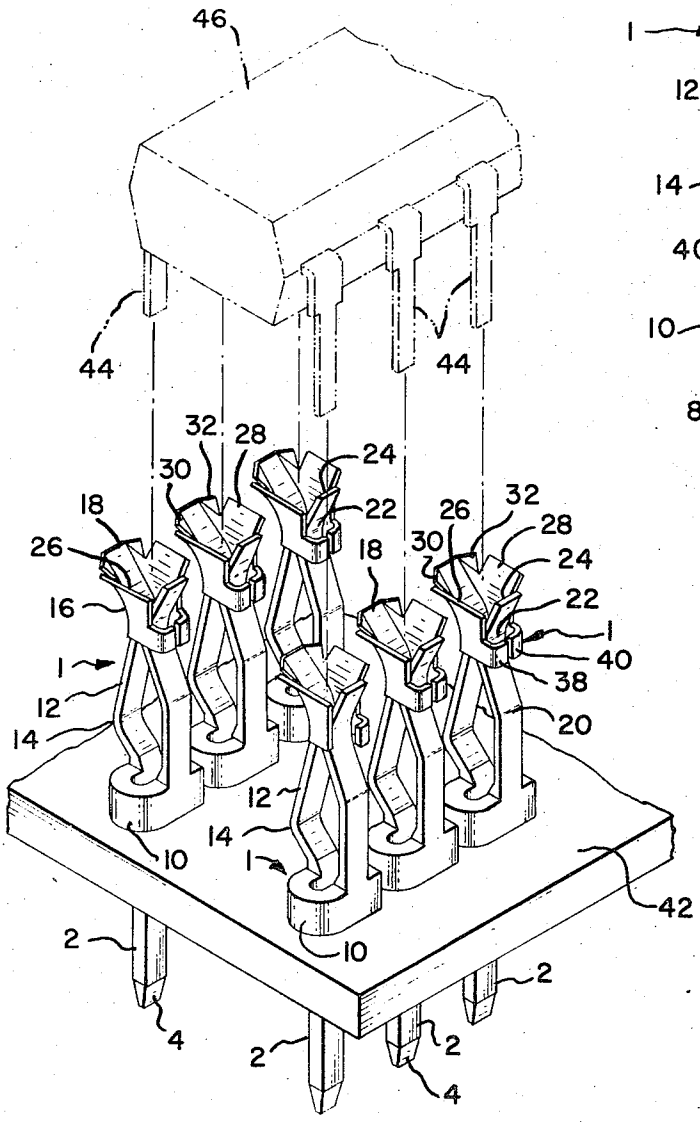
46
44
44
32
28
24
30
22
18
26
26
32
28
30
24
18
22
16
1
1
40
38
12
20
14
12
14
10
1
42
10
2
2
4
2
2
4

Fig. 2

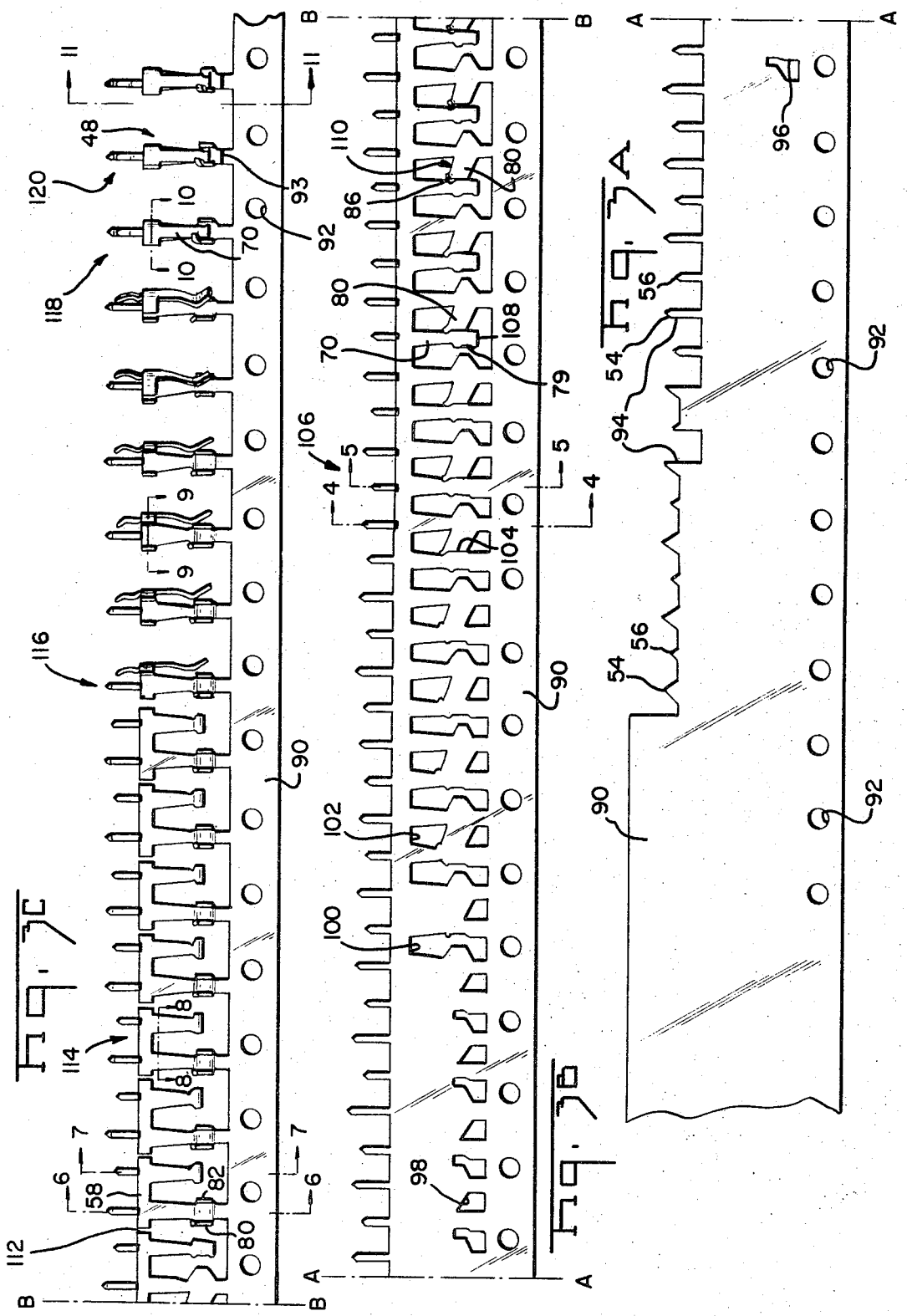
Fig. 7C
Fig. 7B
Fig. 7A

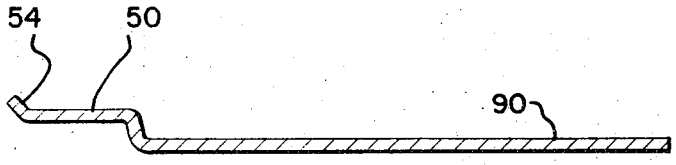

Fig. 4

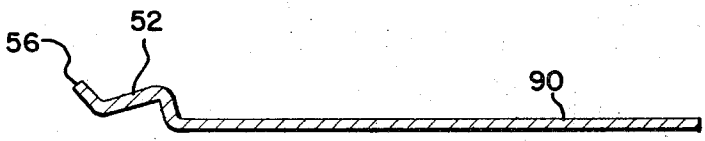

Fig. 5

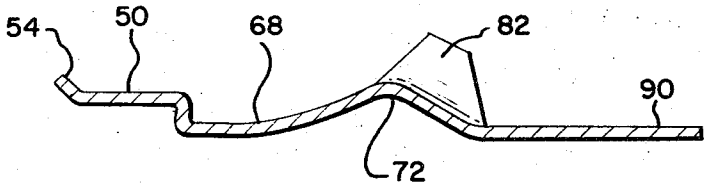

Fig. 6

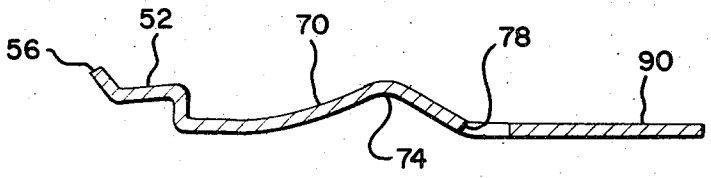

Fig. 7

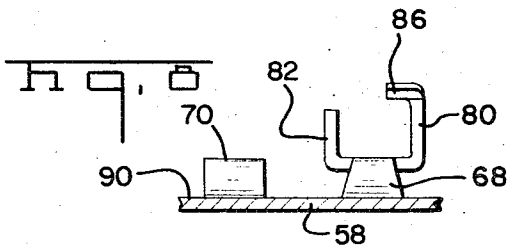

Fig. 8



Fig. 9

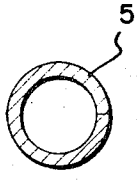

Fig. 10

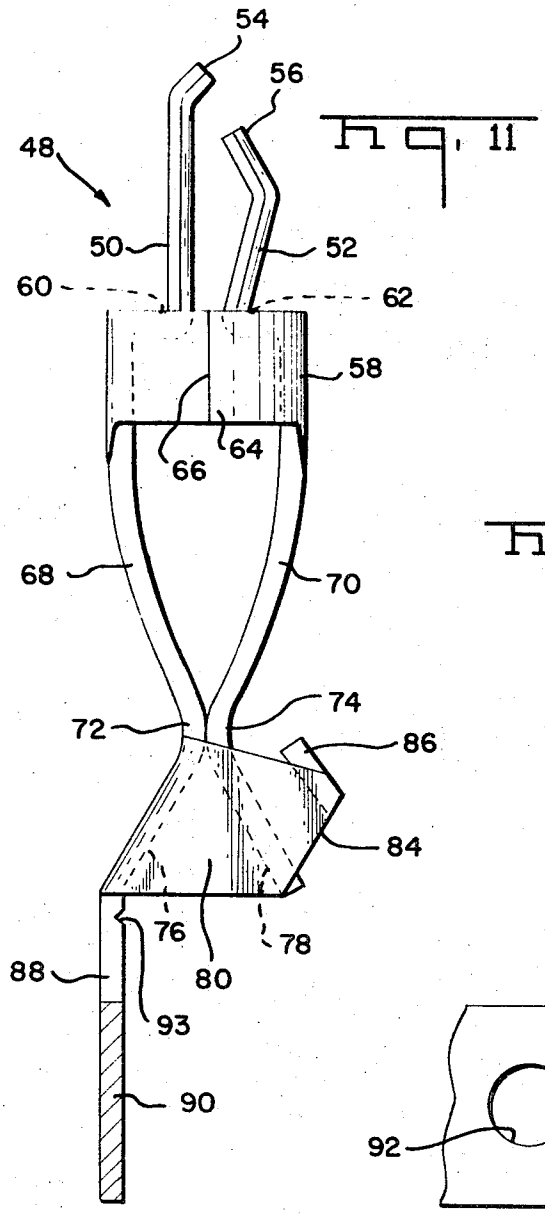
54
56
48
50
52
60
62
58
66
64
68
70
72
74
86
84
76
78
80
88
93
90

Fig. 11

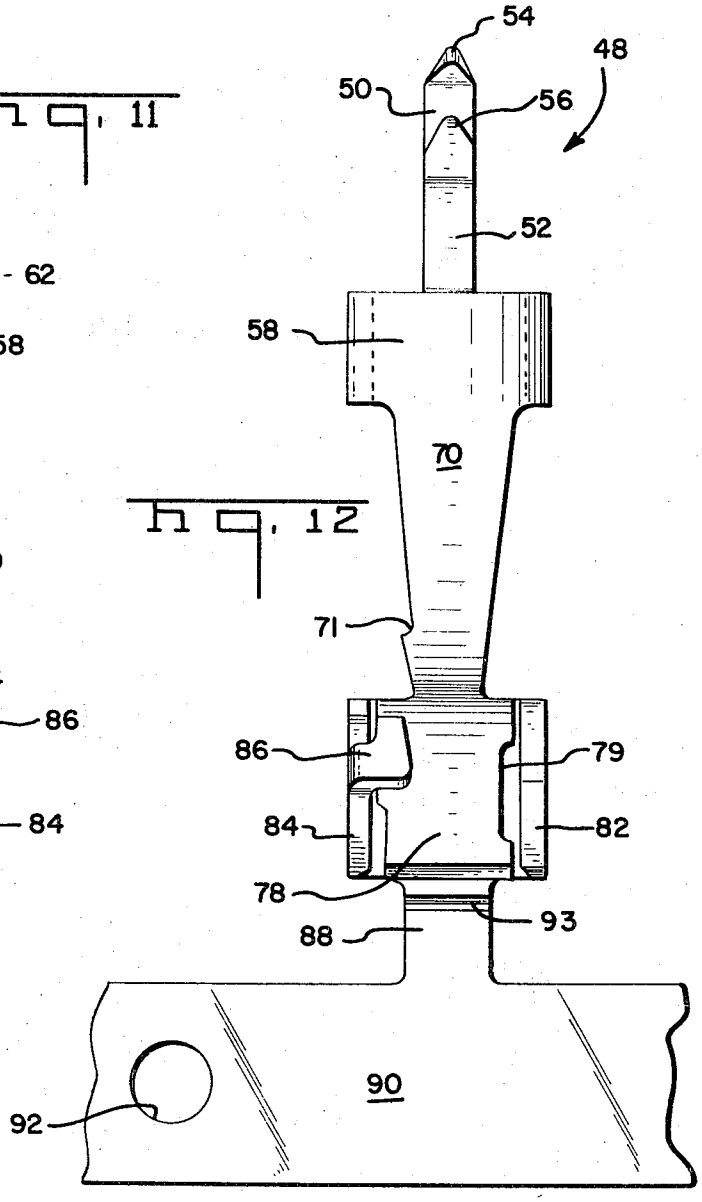
54
48
50
56
52
58
70
71
86
79
84
82
78
93
88
90
92

Fig. 12

STAMPED AND FORMED POST AND MINIATURE SPRING RECEPTACLE

CROSS REFERENCE TO RELATED APPLICATION

This application is a continuation application of application Ser. No. 93,204, filed Nov. 27, 1970, and now abandoned.

FIELD OF THE INVENTION

The present invention relates to a point-to-point post and receptacle which may be secured to a mounting panel or board.

BRIEF DESCRIPTION OF THE PREFERRED EMBODIMENTS

The present invention relates to a single piece or unitary post and receptacle provided with longitudinal depending post for connection to a mounting panel or board. The post is provided with an integral stamped and formed receptacle including a laterally projecting U-shaped bight and spaced longitudinal spring legs on the bight. A tapered receptacle is formed between the spring legs by laterally flared end portions of the legs cooperating with flared or parallel sidewall portions projecting from one of the spring legs. At least one sidewall portion has a tab which partially overlies the other of said legs which is cantilever mounted on the bight. The tab prevents overstressing of the cantilever mounted spring leg upon receiving an electrical contact within the receptacle.

OBJECTS OF THE INVENTION

It is therefore an object of the present invention to provide a stamped and formed single piece post and receptacle for connection to a mounting panel or board.

Another object of the present invention is to provide a stamped and formed post with an integral receptacle formed between a pair of spring legs.

A further object of the present invention is to provide a unitary post and receptacle having spring legs with flared end portions and a pair of sidewall portions forming a receptacle.

Still another object of the present invention is to provide a post with a unitary receptacle, defined between a pair of spring legs, and a pair of sidewall portions, wherein at least one sidewall portion include a tab partially overlying one of said spring legs to prevent excessive deformation thereof.

Other objects and many attendant advantages of the present invention will become apparent upon perusal of the following detailed description taken in conjunction with the accompanying drawings.

BRIEF DESCRIPTION OF THE DRAWINGS

FIG. 1 is an isometric of a unitary post and receptacle according to a preferred embodiment;

FIG. 2 is an isometric of a plurality of unitary posts and receptacles arranged in columns and rows and attached to a mounting panel and further illustrated with a typical electronic apparatus having depending electrical contacts to be received within the receptacles;

FIGS. 3*a*, 3*b*, and 3*c* are fragmentary composite plan views, when considered in serial relationship, illustrate a metal strip and an exemplary stamping and forming progression resulting in a modified embodiment of the invention shown in FIG. 1;

FIG. 4 is a section taken along the line 4—4 of FIG. 3*b*;

FIG. 5 is a section taken along the line 5—5 of FIG. 3*b*;

FIG. 6 is a section taken along the line 6—6 of FIG. 3*c*;

FIG. 7 is a section taken along the line 7—7 of FIG. 3*c*;

FIG. 8 is a section taken along the line 8—8 of FIG. 3*c*;

FIG. 9 is a section taken along the line 9—9 of FIG. 3*c*;

FIG. 10 is a section taken along the line 10—10 of FIG. 3*c*;

FIG. 11 is an enlarged detail section taken along the line 11—11 of FIG. 3*c* illustrating a modified stamped and formed post and miniature spring receptacle according to the present invention; and

FIG. 12 is a side elevation of the embodiment shown in FIG. 10.

DETAILED DESCRIPTION OF THE PREFERRED EMBODIMENTS

With more particular reference to FIG. 1 of the drawings, there is illustrated generally at 1, a unitary post and receptacle including a longitudinally depending post 2 of generally rectangular configuration and provided with a beveled pointed end 4. The post includes outwardly flaring lateral sidewall portions 6 immediately adjacent to an enlarged rectangular portion 8. The portion 8 includes an integral, laterally extending U-shaped bight 10 having an upstanding, generally longitudinally extending spring leg 12, substantially in line with the post 2. The spring leg 12 includes a laterally outwardly curved or bowed portion 14 immediately adjacent to the bight 10. The spring leg 12 additionally includes an inwardly reversely curved or bowed portion 16 immediately adjacent to an outwardly flared end portion 18.

The bight 10 is further provided with a second longitudinal spring leg 20 in opposed spaced relationship with respect to the leg 12. The leg 20 includes an inwardly curved or bowed portion 22 adjacent to, and opposed in relationship with, the bowed portion 16. The leg 20 terminates in a laterally outwardly flared end portion 24.

The flared end portion 18 and the inwardly bowed portion 16 is provided integrally thereon with sidewall portions 26 and 28. As shown, the sidewall portions are formed and bent into positions generally extending between the spring legs 12 and 20 and in opposed spaced relationship with respect to each other. The sidewall portions 26 and 28 are additionally laterally outwardly flared, however, they may be planar parallel and not flared. Diagonally extending corner tabs 30 and 32 are provided between the flared end portions 18 and the sidewalls 26 and 28. A kerf 34 is defined between the tab 30 and the sidewall 36 and a corresponding kerf 36 is defined between the tab 32 and the sidewall portion 28. If the sidewall portions 26 and 28 are planar parallel, the kerfs are omitted. Upon forming the sidewalls 26 and 28 to the positions as shown and described, the kerfs 34 and 36 become widened to form stress-relieving notches which allow the sidewalls 26 and 28 to be formed into their laterally outwardly tapering

configurations. The sidewall portions **26** and **28** are provided with tabs **38** and **40** respectively which are formed and bent to extend toward each other and partially overlie the inwardly bowed portion **22** of the spring leg **20.** As shown in the figure, the flared end portions **18** and **24** and the flared sidewalls **26** and **28** together define a tapered contact receiving receptacle extending generally between the spaced opposed spring legs **12** and **20.** The spring leg **12** is generally in longitudinal alignment with the post **2** and is purposely designed to be substantially rigid, whereas, the spring leg **20** is cantilever mounted to the bight **10** and is capable of being resiliently deflected toward and away from the leg **12.** For example, upon receiving a male electrical contact within the described receptacle the outwardly flared spring legs configurations guide and readily accommodate insertion of such contact. Additionally, the spring leg **20** will be resiliently deformed or deflected in a direction away from the spring leg **12** upon insertion of the contact. The tabs **38** and **40** provide positive stops to limit the deformation or deflection of the spring leg **20.** Accordingly, the tabs provide an overstressing means to prevent excessive deformation or deflection and resultant overstressing of the spring leg **20.**

With reference to FIG. **2,** there is particularly shown a plurality of unitary post and receptacles, as particularly shown in FIG. **1,** secured in a mounting board or panel **42** of dielectric material and positioned in spaced rows corresponding to the locations of spaced male contacts or leads **44** of a micro-electronic circuit component **46.** Each receptacle flared configuration, formed by its corresponding sidewalls **26** and **28** and the spring end portions **18** and **24,** serve to guide a corresponding lead **44** during insertion thereof. The spring leg **20** of each receptacle will be resiliently deformed or deflected away from the opposed leg **12** to accommodate the corresponding lead **44** therebetween. The resilient spring action of the leg **20** will insure clamped contact of the corresponding lead **44** between the legs **12** and **20.** During insertion of the lead the tabs **38** and **40** of a respective receptacle will limit excessive bending and deformation of the spring leg **20** to prevent overstressing thereof. As shown, the preferred embodiment can be modified by eliminating one of the tabs, leaving only one tab, such as the tab **40** which is sufficient to prevent overstressing as described.

As more particularly shown in FIG. **1,** the bight portion **10** and the post portion **2** are of thicker cross section than the spring legs **12** and **20.** A tapered interconnecting sidewall portion **40** provides a transition in metal thickness between the spring leg **12** and the bight portion **10.** In similar fashion, a tapered sidewall **42** forms a transition portion of metal stock thickness between the spring leg **20** and the bight portion **10.** Also the relatively thicker bight portion **10** provides a base supporting the relatively readily deflectable spring portions **12** and **20** on a board or panel **42** as shown in FIG. **2.**

With reference to FIGS. **11** and **12** of the drawings, a modification of the embodiment shown in FIG. **1** will be described in detail. Generally shown at **48,** is a modification including a pair of adjacent longitudinal projecting posts **50** and **52** having respective terminal end portions **54** and **56** inwardly bent toward one another. The post **52** is relatively shorter in length and is inclined toward the post **50.** The posts integrally project from a generally lateral cylindrical bight **58.** More specifically, the posts **50** and **52** are located on opposed sides of one circular end of the bight **58** and include reverse curved end portions **60** and **62** directed toward each other and locating the posts **50** and **52** in adjacent relationship inwardly of the bight circumference. As shown in FIG. **12,** the posts **50** and **52** are also in aligned coplanar relationship. As shown in FIG. **11,** the bight **58** is fabricated from a single piece of metal having marginal edge portions **64** and **66** abutted together in formation of the bight circumference. The bight also includes integral oppositely directed spring legs **68** and **70,** originating on opposite sides of a circular end of the bight, gradually curved along their longitudinal dimensions toward each other until they contact at reverse curved portions **72** and **74** and terminate in outwardly flared terminal end portions **76** and **78.** The terminal end portion **76** is provided with integral sidewall portions **80** and **82** projecting in spaced parallel relationship. The portion **82** has a projecting tapered lateral portion **84** terminating in a generally L-shaped tab **86.** As shown in FIGS. **11** and **12,** the terminal end portion **78** of the spring leg **70** is received generally between the spaced sidewall portions **80** and **82,** and the tab **86** is partially folded to project from the plane of the sidewall portion **80** and overlie the outwardly flared terminal end portion **78.** The tapered portion **84** of the sidewall portion **80** is provided to position the tab **86** generally in spaced relationship overlying the central portion of the flared terminal end portion **78.** The end portion **76** is integral with a stem **88** which is part of a continuous carrier strip, a portion of which is shown at **90.** A groove **93** extends entirely across one surface of the stem **88** to facilitate separation of the device **48** from the stem.

In use the device **48** may be inserted into a card or board such as the board **42** in substitution for the preferred embodiment **1.** As shown the device **48** is shown inverted with respect to the preferred embodiment **1.** The pair of posts **50** and **52** when inserted into the board **42** are resiliently biased toward each other to provide resilient spring action against the board to prevent inadvertent removal therefrom. To permanently secure the device **48** in the board **42,** the posts **50** and **52** may be solder dipped, in the well known manner, the space between the posts providing a wicking action which accepts and retains fluidized solder until it solidifies. A receptacle is formed by the spring legs, the terminal end portions **76** and **78** cooperating with the flanged portions **80** and **82.** Upon receiving the leads **44** of the exemplary microelectronic component **46,** the spring legs **68** and **70** will be resiliently biased apart, the tab **86** preventing overstressing of the spring leg **70** in a manner similar to the tab **38** or **40** of the preferred embodiment shown in FIG. **1.** It is to be understood that the receptacle portion of the device shown in FIG. **1** may be similar in configuration to the receptacle portion of the device shown in FIG. **11** by eliminating the kerfs **34** and **36** and by making the flared sidewalls **26** and **28** in parallel spaced apart relationship similar in configuration to the sidewall portions **80** and **82.**

With reference to FIGS. **3***a*, **3***b* and **3***c*, an exemplary stamped and formed die progression for the device shown in FIGS. **11** and **12** will be described in detail. Thus, with reference to FIG. **3***a*, a fragmentary portion of the continuous metal strip **90** is shown in detail with a plurality of spaced apertures **92** being punched along

one margin of the strip thus providing a perforated carrier strip for progressively advancing the carrier strip serially through punching and forming work stations. At one work station, the marginal edge opposite the perforations **92** is punched to form the end portions **52** and **56** of the posts **54** and **56.** As the carrier strip is supplied serially to another work station, notches **94** are provided to separate and finally form the posts **54** and **56.** Medial portions **96** and **98** of the carrier strip are removed by a punching operation at yet other serially located work stations. With reference to FIG. *3b*, additional medial portions of the carrier strip are removed at **100** and **102** at still additional serially located work stations. A parting line **104** is added at still another serially located work station. At still another serially located work station, generally indicated at **106**, the posts **50** and **52** are bent to their final bowed or curved configurations shown in FIG. **11**, and, with reference to FIGS. **4** and **5**, the configuration of the carrier strip **90** together with the configurations of the posts **50** and **52** are shown in greater detail.

With reference again to FIG. *3b*, a further medial portion of the carrier strip is removed, as shown at work station **108**, to form the terminal end **78** of the spring leg **70** immediately adjacent to the sidewall portion **80.** Simultaneously, a piece **79** is removed from the spring leg end **78.** At still another serially located work station, generally indicated at **110**, the projecting tab **86** on the sidewall portion **80** is bent and formed to its configuration shown in FIGS. **11** and **12.**

With reference to FIG. *3c*, at still another serially located work station, a medial portion of the strip **90** is severed at **112** providing a metal strip **58** which is later formed into the lateral bight portion shown in FIGS. **11** and **12.** Also at the work station, the flange portions **80** and **82** are bent and formed to their parallel spaced relationship, as shown in FIGS. **11** and **12**, projecting from the spring leg **76.** With more particular reference to FIGS. **6** and **7**, FIG. **6** shows the spring leg portion **68** formed to its curved configuration. FIG. **7** shows the spring leg **70** formed to its desired curved configuration simultaneously with the spring leg portion **68** and at the same work station.

With further reference to FIG. *3c*, there is shown a selected work station, generally shown at **114**, which results in the structure shown in FIG. **8.** The spring leg **68** is shown still attached to the carrier strip **90** and the receptacle enclosure is partially completed with the sidewall portions **80** and **82** and the tab **86** having been bent and formed to their final desired configurations shown in FIGS. **11** and **12.** As shown in FIG. *3c*, beginning at a serially located work station, generally indicated at **116**, the strip **58** is bent by successive bending and forming operations from a planar position shown in FIG. **8** to a partially looped configuration such as shown in FIG. **9**, until finally, as shown in FIGS. *3c* and **10**, at an exemplary work station generally indicated at **118**, the bight portion **58** is formed to a completely cylindrical configuration. Simultaneously with the formation of the bight **58**, the spring leg **70** is progressively pivoted into position between the spaced sidewall portions **80** and **82** and under the overlying tab **86.** The clearances are such that when the spring leg is pivoted into position, during the formation of the cylindrical bight **58**, it will readily pass in the space between the tab **86** and the flange portion **82.** However, upon completion of the bight cylindrical configuration the spring leg **70** will be constrained to move only in cantilever deflection fashion without return pivotal motion and thereby will engage against the tab **86** to prevent further cantilever deflection and overstressing thereof. To complete the operation, reference will be made to FIG. *3c* wherein at serially located work station generally indicated at **120** the groove **92** is provided which facilitates separation of the completed post and receptacle from the carrier strip **90.**

As shown and described, the die progression is particularly suitable for formation of the preferred embodiment shown in FIGS. **11** and **12.** However, the progression may easily be modified to form the preferred embodiment shown in FIG. **1.** For example, the strip forming the bight portion **58** may be bent and formed to a U-shaped configuration to conform with the bight portion **10** rather than to a completely cylindrical configuration as required in the formation of the bight portion **58.** And, as heretofore described, one of the tabs, such as the tab **38** may be eliminated during formation of the preferred embodiment of FIG. **1**, enabling the spring leg **20** to be inserted in the space between the remaining tab **40** and the sidewall **26** during formation of the bight portion in an operation similar to that above-described. In such a modification, the remaining single tab **40** is sufficient to prevent overstressing of the spring leg **20** as it is resiliently bent in cantilever fashion.

Other modifications and embodiments of the present invention are to be embodied in the scope of the appended claims.

What is claimed is:

1. A unitary post and receptacle comprising: at least one longitudinal post, spaced spring legs connected to said post, each of said legs having a laterally flared end portion, laterally flared spaced sidewall portions connected to one of said legs, the other of said legs being connected to said post for cantilever spring action, said flared sidewall portions and said flared end portions define a tapered receptacle extending generally between said spring legs, one of said legs being substantially in line longitudinally with said post and being provided with flared corner tabs and a kerf disposed between each of said tabs, and a corresponding one of said flared sidewall portions.

2. A unitary post and receptacle comprising: at least one longitudinal post, spaced spring legs connected to said post, each of said legs having a laterally flared end portion, laterally flared spaced sidewall portions connected to one of said legs, the other of said legs being connected to said post for cantilever spring action, said flared sidewall portions and said flared end portions defining a tapered receptacle extending generally between said spring legs, a second post adjacent to said longitudinal post, and a bight portion connecting said posts, said bight portion carrying said spring legs in spaced opposition to each other.

* * * * *