March 2, 1954 H. V. KINDSETH 2,670,700

CONTROL MECHANISM FOR SEWING MACHINES AND THE LIKE

Filed Oct. 27, 1950 3 Sheets-Sheet 1

Fig. 1

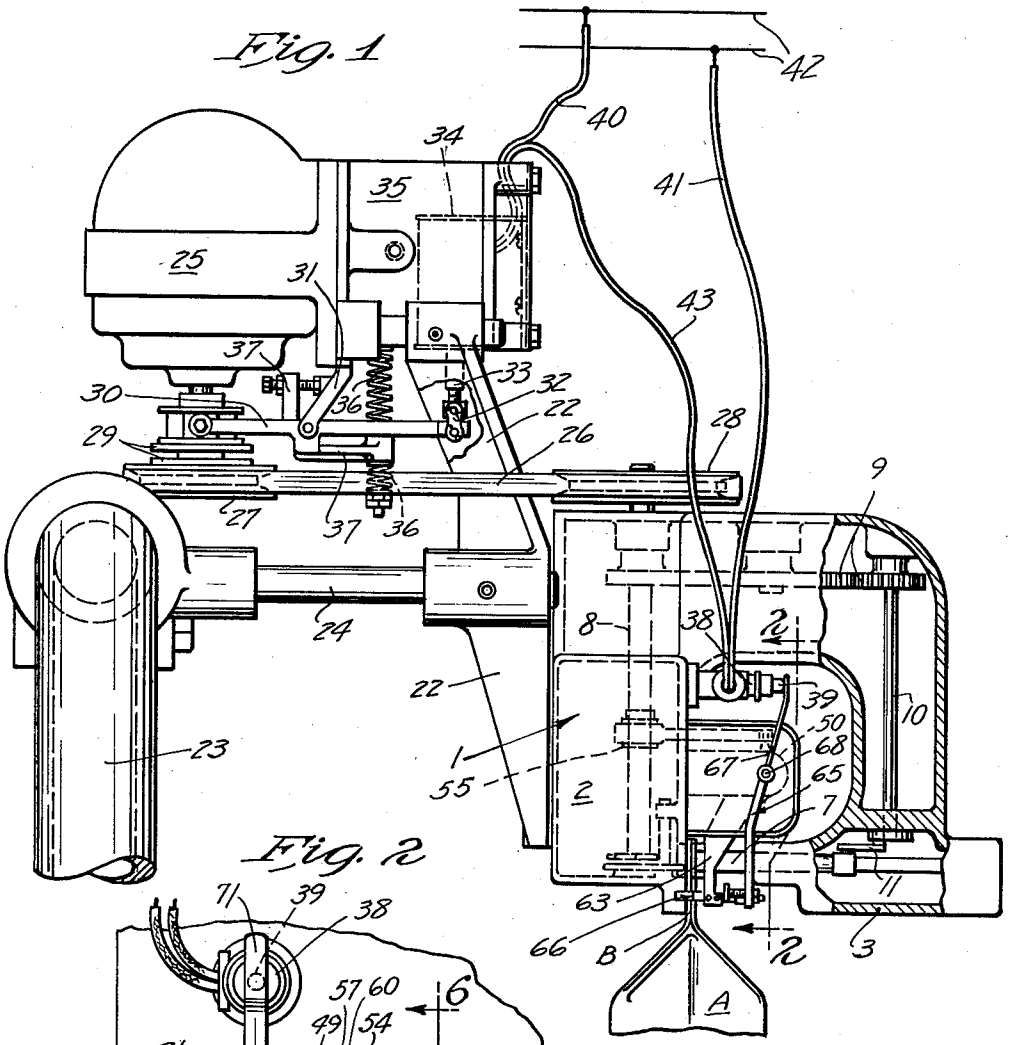

Fig. 2

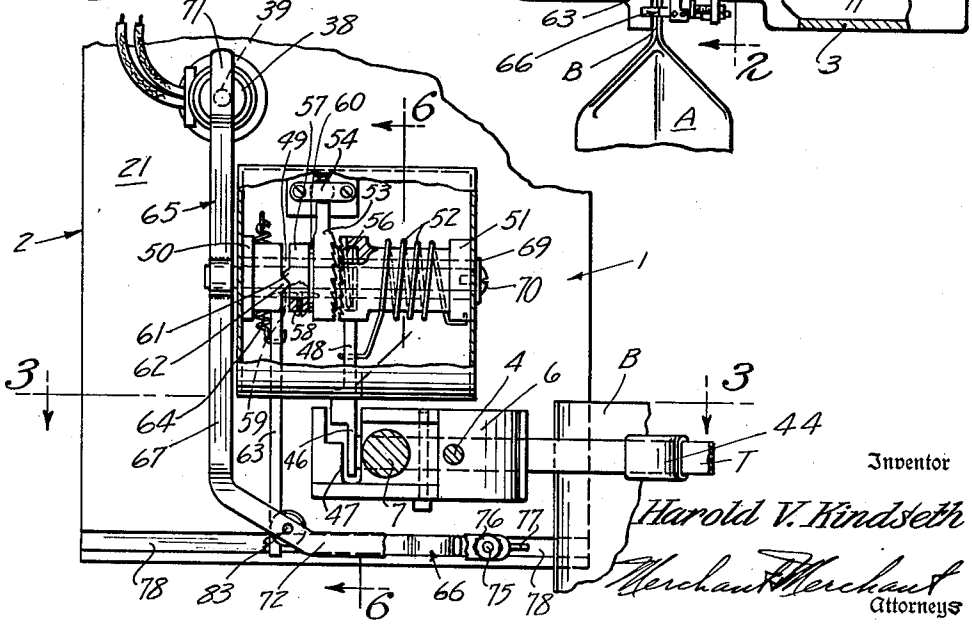

Inventor

Harold V. Kindseth

Merchant & Merchant

Attorneys

March 2, 1954 H. V. KINDSETH 2,670,700

CONTROL MECHANISM FOR SEWING MACHINES AND THE LIKE

Filed Oct. 27, 1950 3 Sheets-Sheet 2

Fig. 3

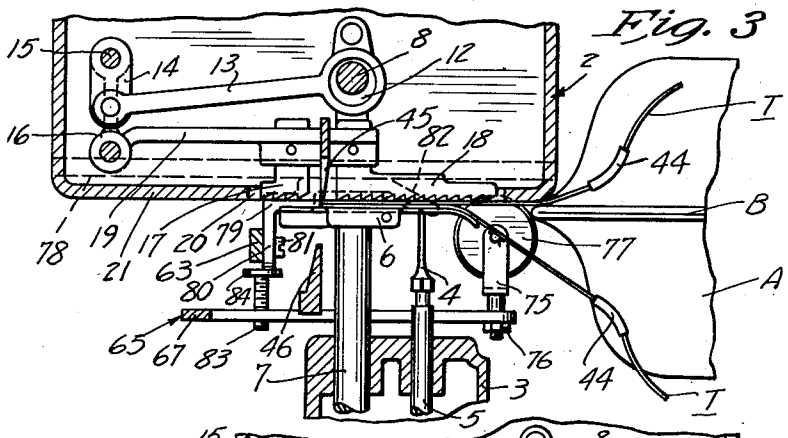

Fig. 4

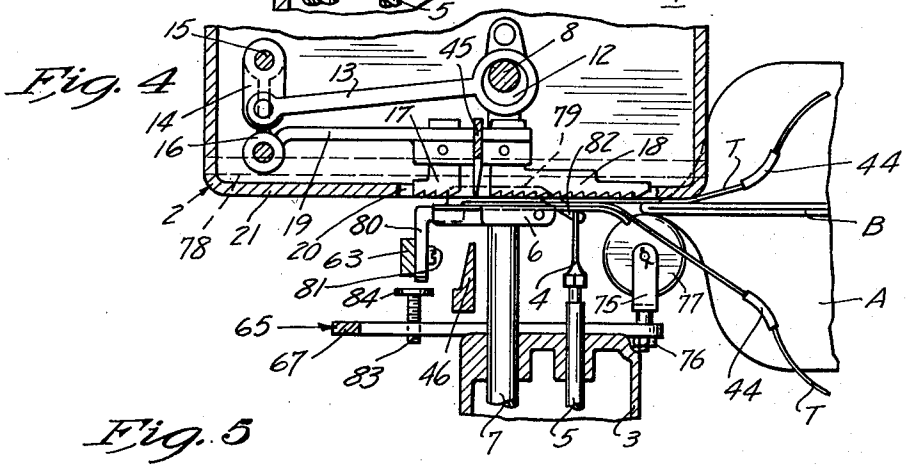

Fig. 5

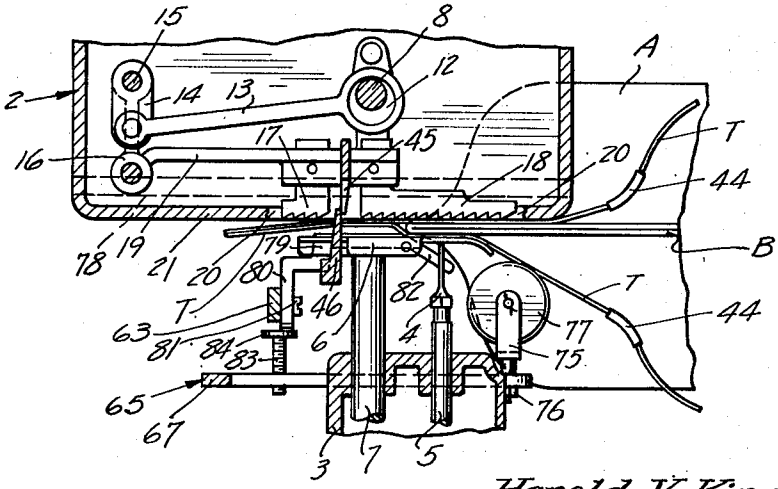

Inventor

Harold V. Kindseth

By

Merchant & Merchant

Attorneys

March 2, 1954 H. V. KINDSETH 2,670,700

CONTROL MECHANISM FOR SEWING MACHINES AND THE LIKE

Filed Oct. 27, 1950 3 Sheets-Sheet 3

Fig. 6

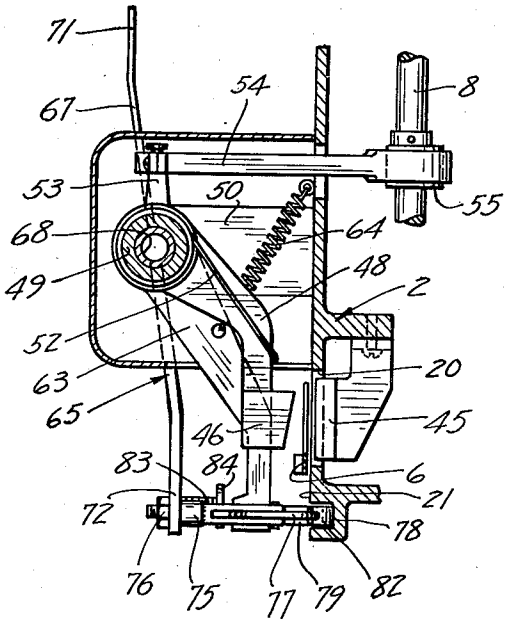

Fig. 7

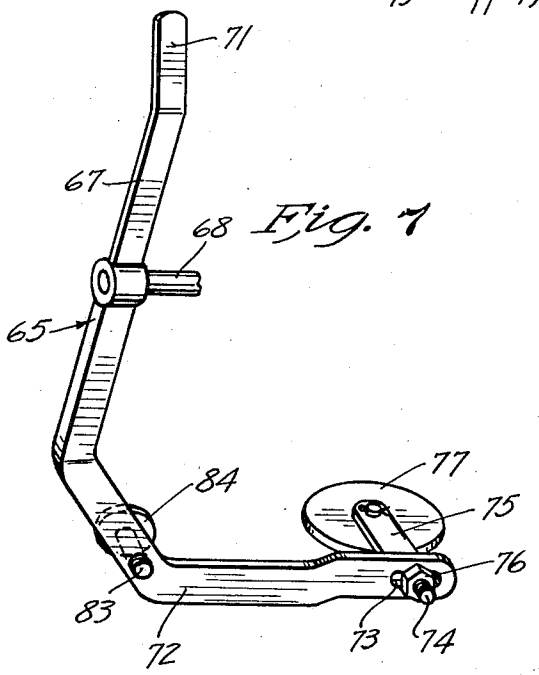

Inventor
Harold V. Kindseth
By Merchant & Merchant
Attorneys

Patented Mar. 2, 1954

2,670,700

UNITED STATES PATENT OFFICE

2,670,700

CONTROL MECHANISM FOR SEWING MACHINES AND THE LIKE

Harold V. Kindseth, Minneapolis, Minn., assignor to Bemis Bro. Bag Co., Minneapolis, Minn., a corporation of Missouri

Application October 27, 1950, Serial No. 192,517

6 Claims. (Cl. 112—11)

1

My invention relates generally to power-driven sewing machines and more specifically to improvements in machines used in stitching together the upper ends of filled bags.

In sewing together said upper ends of the filled bags, it is common practice to utilize one or more continuous strips of tape for each bag to provide reinforcement for the closure thereof. The tape is secured to the bag by being stitched through in the sewing of the closure. The tape aids to prevent escape from the bag of fine granular material which might otherwise escape through the stitching alone.

Heretofore, in machines of this type, means has been provided, responsive to movements of the bag through the sewing machine, to cut the tape adjacent the opposite side edges of the bag. However, the means for feeding the tape and actuating the sewing mechanism has heretofore usually been manually controlled. Therefore, there has inevitably been a considerable loss of both tape and thread if, for one reason or another, the operator either fails to continuously feed the bags in close succession or fails to stop the sewing and tape-feeding mechanism during periods which elapse between relatively widely spaced articles.

An important object of my invention is the provision of novel means whereby the sewing and feeding movements are automatically initiated and terminated by mechanism responsive to the movements of the bags or other articles being fed therethrough.

Another object of my invention is the provision of control means for successively initiating a sewing and tape-feeding operation, imparting cutting movements to the cutting means whereby to cut the tape on opposite edges of the bag, and thereafter, terminating said sewing and tape-feeding operation of the machine.

Another object of my invention is the provision of novel article-engaging control means for initiating and terminating a sewing and tape-feeding operation to the machine and second article-engaging control means in tandem relation to the first said control means operating independently thereof to cut the tape on opposite sides of the article, and a second control member engaging the first control member in a manner to maintain the machine in operation until the tape has been severed on both sides of the article.

Another object of my invention is the provision of control means as set forth which are easily adjusted with respect to one another and

2

to the machine whereby to compensate for varying thicknesses of article portions being fed through the machine.

Another object of my invention is the provision of control apparatus as set forth which is relatively simple and inexpensive to manufacture and install, which is efficient in operation, and which is rugged in construction and durable in use.

The above and still further highly important objects and advantages of my invention will become apparent from the following detailed specification, appended claims, and attached drawings.

Referring to the drawings, which illustrate the invention, and in which like characters indicate like parts throughout the several views:

Fig. 1 is a fragmentary view in side elevation, some parts being broken away and some parts shown in section, of a power-driven sewing machine and controls therefor, built in accordance with my invention;

Fig. 2 is a fragmentary view partly in front elevation and partly in section as seen from the line 2—2 of Fig. 1;

Fig. 3 is a horizontal section taken substantially on the line 3—3 of Fig. 2;

Fig. 4 is a view corresponding to Fig. 3 but showing a different position of some of the parts;

Fig. 5 is a view corresponding to Fig. 3 but showing a still different position of some of the parts;

Fig. 6 is a vertical section taken substantially on the line 6—6 of Fig. 2; and

Fig. 7 is a view in perspective of one of the control members of my invention, some parts being broken away.

Referring with greater detail to the drawings, the numeral 1 indicates in its entirety a power-driven sewing machine having a base 2 and a sewing head 3. The head 3 supports a needle 4 by means of conventional reciprocating needle bar 5 and a presser foot 6 secured to the inner end of a presser bar 7. The sewing and feeding mechanism of the machine is of conventional nature and is shown in the drawings more or less diagrammatically. However, it will be seen, by reference to Fig. 1 and Figs. 3 to 5, inclusive, that the needle bar 5 and feeding mechanism are driven from a drive shaft 8, the needle bar 5 being operatively connected thereto by gearing 9, a rotary shaft 10, and crank and pitman connections 11. The feeding mechanism comprises an eccentric 12 fast on the drive shaft 8, a pitman arm 13 driven by the eccentric 12 and

connected at its free end to a crank arm 14 fast on a rock shaft 15. The rock shaft 15 is suitably journalled in the base 2 and has rigidly secured thereto a crank arm 16 which drives a pair of feed dogs 17 and 18 through a rigid link 19. The feed dogs 17 and 18 extend laterally outwardly through an aperture 20 in a base plate 21, shown as being part of the base 2. The feed dogs 17 and 18 are adapted to move in a direction to feed material between the base plate 21 and the presser foot 6 from the right to the left with respect to Figs. 3 to 5, inclusive.

The frame 1 of the sewing machine is rigidly secured to a mounting bracket 22 which is supported from a main supporting frame 23 by laterally extending arms 24, one of which is shown. A drive motor 25 is secured to the upper end of the bracket 22 and drives the sewing and feeding mechanism through a V-belt 26 running over a V-pulley 27 on the shaft of the motor 25 and another V-pulley 28 mounted fast on the drive shaft 8. It will be seen, by reference to Fig. 1, that the pulley 27 is provided with a clutch mechanism 29 which is operated by a clutch lever 30 to operatively couple the pulley 27 to the motor 25. The clutch lever 30 is pivoted intermediate its ends to an arm 31 secured to the base of the motor 25. At its free end, the lever 30 is secured by a coupling 32 to a plunger 33 operated by a solenoid, shown by dotted lines in Fig. 1 and indicated by the numeral 34. The solenoid 34 is contained within a housing 35 secured to the base of the motor 25 and supported by the upper end of the bracket 22. The lever 30 is further provided with cushioning springs 36 and an adjustable stop element 37. The clutch and operating linkage therefor do not in themselves constitute the invention and further detailed description thereof is deemed unnecessary.

The clutch-operating solenoid 34 is controlled by a switch contained within a housing 38 mounted on the base plate 21. The switch is of a type permitting overtravel of the switch actuator after the contacts of the switch have been closed. A plunger-type switch button 39 extends outwardly of the housing 38 and may be assumed to be yieldingly biased against inward pressure by conventional spring means not shown but contained within the switch housing 38. The above-mentioned switch may also be assumed to be in a normally open condition, the closing thereof being effected by inward movement of the actuator 39 against the biasing means within the housing 38. As seen in Fig. 1, the switch is interposed in a circuit comprising a pair of leads 40 and 41 one each connected to one side of a suitable source of electrical power such as a power line 42. The lead 40 extends from one side of the power line 42 to the solenoid 34 and the lead 41 extends from the other side from the power line 42 to one side of the switch contained within the housing 38. When the circuit is completed, the lead 43 connects the solenoid 34 to the switch contained in the housing 38, thus completing the electrical circuit for the solenoid 34.

In the sewing of certain articles, such as the sewing together of opposite sides of the upper end of filled bags, it is sometimes expedient to apply reinforcing tape to the upper ends of said bags and cause the stitching to extend through said tape or tapes. This arrangement aids in filling the bags, particularly when the bags are filled with fine granular or powdered material which

would otherwise tend to escape between the stitching. A filled bag is indicated in the drawings by A, the upper closed end B thereof being adapted to be fed through the machine between strips of tape T. The tape T which may be made from any suitable material such as paper, fabric, or the like, is fed into the machine between the base plate 21 and the presser foot 6 through feeding guides 44 which are fragmentarily shown in Figs. 2 to 5, inclusive, and which are conventional in nature. The tapes T are fed through the machine in a direction from the right to the left with respect to Figs. 3 to 5, inclusive, between the tooth-equipped feed dogs 17 and 18, and the closed ends B of the bags A are initially fed therebetween either manually or by mechanical means as desired.

It is preferred that a length of sewed tape extend laterally outwardly from each side edge of the closed bag A to prevent the stitching therein from becoming loosened or unravelled within the limits of the bag, thereby causing leakage. I provide cutting means for severing the stitching and the tape T at predetermined distances from the opposite side edges of the bag A, such cutting means comprising a relatively stationary cutter blade 45 and a relatively movable cutter blade 46. The stationary cutter blade 45 extends outwardly into the aperture 20 of the base blade 21 intermediate the feed dogs 17 and 18 and is rigidly secured to the base 2, see Fig. 6. The movable cutter blade 26 is adapted to cooperate with the stationary blade 45 through a recess or notch 47 in the presser foot 6. Mechanism for operating the cutter blade 46 may be of any conventional type such as disclosed in the Sauer Patent No. 2,229,991. A form of mechanism for operating the cutter blade 46 is illustrated in Figs. 2 and 6 as comprising an arm 48, to the outer end of which the cutter blade 46 is rigidly secured, and mechanism for moving said arm in a direction to cause cutting engagement between the cutter blades 45 and 46. The arm 48 is journalled at one end on a tubular shaft 49 which is mounted between upstanding supports 50 and 51 formed integrally with the base 2, and is yieldingly biased in a direction to move the cutter blade 46 out of engagement with the cutter blade 45 and out of the path of travel of the tapes T, and the upper end B of the bag A, by a torsion spring 52. The journalled end of the arm 48 is provided at one side with ratchet teeth that are adapted to engage cooperating teeth on a crank arm 53 which is also journalled on the tubular shaft 49 adjacent the arm 48. The free end of the crank arm 53 is pivotally connected to one end of a pitman 54, the inner end of which is secured to an eccentric 55 mounted on the drive shaft 8. The crank arm 53 is oscillated continuously during the sewing and feeding operation of the sewing machine and the ratchet teeth of the crank arm 53 are normally maintained out of engagement with the ratchet teeth of the cutter blade arm 48 by a coil compression spring 56 encircling the tubular shaft 49 intermediate the journalled ends of the arms 48 and 53. In order to cause the cutter blade 46 to sever the tape T and stitching therein, it is necessary for the ratchet teeth on the oscillating arm 53 to engage the cooperating ratchet teeth on the cutter blade arm 48 for a time interval necessary to produce a single cutting movement of the cutter blade 46. For this purpose, there is provided a collar 57 mounted for axial sliding movements on the tubular shaft

49 adjacent the side of the crank arm 53 opposite the ratchet teeth thereon. The collar 57 is held against rotation on the shaft 49 by a key-acting screw or the like 58 which has its inner end contained in a keyway 59 in the tubular shaft 49. A thrust washer 60 is interposed between the collar 57 and the journalled end of the crank arm 53. The collar 57 is provided with a crank-acting lug 61 which is adapted to be engaged by a similar lug 62 on a crank-acting member 63 which has its inner end journalled on the tubular shaft 49 adjacent the upstanding support 50. It will be seen by reference to Figs. 2 and 6, that movement of the member 63 in a clockwise direction with respect to Fig. 6, will cause the cam lug 62 to engage the cam lug 61 and move the collar 57 and crank arm 53 toward the ratchet teeth on the cutter arm 48 against bias of the spring 56. Continued movement of the member 63 causes the cam lug 62 to move beyond the cam lug 61 and permits the spring 56 to move the ratchet teeth on the crank arm 53 out of engagement with the teeth on the cutter blade arm 48. Of course, during the time that the ratchet teeth are engaged, the crank arm 53 will impart a swinging movement to the cutter blade 46 to sever the tape. Similarly, when the member 63 is moved in a counterclockwise direction with respect to Fig. 6, to its normal position shown therein, engagement of the cam lug 62 with the cam lug 61 will cause the ratchet teeth to be engaged and another cutting operation to be performed. The member 63 is yieldingly biased in one direction by a coil tension spring 64 which has one end anchored thereto and another end anchored to the base plate 21.

The primary feature of my invention is an arrangement whereby, when a bag or article to be sewed is moved between the base plate 21 and the presser foot 6, the stitching and tape-feeding operatings will automatically function, the tape T severed at a predetermined spaced distance from one side edge of the bag A, and thereafter, when the upper end of the bag has been stitched closed, the tape T and stitching will be severed at a predetermined spaced point outwardly of the opposite side edge of the bag, and the feeding and sewing operations terminated. To achieve these results, I provide a pair of control members 65 and 66 that are operatively situated in tandem relationship with respect to the direction of travel of bags being fed through the machine whereby the former is actuated by the bag prior to the engagement of the latter by said bag. The control member 65 comprises an elongated arm 67 having a shaft 68 rigidly secured to its intermediate portion. The shaft 68 is journalled in the tubular shaft 49 and held against axial movement by a washer 69 which engages one end of the tubular shaft 49 and which is held securely in place on the end of the shaft 68 by a machine screw or the like 70. As indicated in Figs. 1 and 2, one end 71 of the arm 67 overlies and engages the outer end of the switch button 39, the other end thereof having an angular portion 72 which overlies the outer end of the member 63. The end portion 72 of the control member 65 extends longitudinally of the direction of feeding movement of the bags through the machine and at its extreme end, is provided with a longitudinally extending slot 73 through which extends a threaded end portion 74 of a bifurcated member or fork 75. The fork 75 is rigidly clamped to the arm 67 by a clamping nut or the like 76 and may be adjustably moved in opposite directions parallel to the direction of movement of the bags through the machine to the extent permitted by the slot 73, and by loosening of the clamping nut 76. A bag-engaging roller 77 is journalled in the fork 75 and has a peripheral edge portion normally contained in an outwardly opening groove or channel 78 in the base plate 21 extending longitudinally of the direction of travel of the bags through the machine. Engagement by the roller 77 of the upper end portion B of a given bag manually or otherwise fed into the machine causes the roller 77 to be moved outwardly with respect to the base plate 21 and the control member 65 to be rocked in the direction to close the switch 38 and energize the solenoid 34, whereby to initiate operation of the feeding and stitching means.

The control member 66 comprises a finger 79 which normally lies in the channel 78 and an integrally formed outwardly projecting mounting lug 80 which is secured fast to the member 63 by means of a machine screw or the like 81. The forward end of the finger 79 is turned angularly outwardly of the channel 78 to provide a cam-acting portion 82 which engages a bag being fed through the machine. Movement of a bag against the cam-acting portion 82 moves the control finger 79 outwardly of the channel 78 with consequent movement of the member 63 sufficient to cause a tape-cutting operating to be performed. When the bag has passed beyond the rear end of the finger 79, said finger will return to its normal position in the channel 78 as indicated in Fig. 3 and under bias of the coil spring 64. This return movement of the finger 79 into the channel 78 causes another cutting operation to be performed on the tape at the opposite side edge of the bag A.

For preventing movement of the roller 77 laterally inwardly toward the channel 78 after the bag passed therebeyond and until the second cutting operation on the tape, I provide an abutment on the control member 65 which is engageable by the control member 66. This abutment comprises a stud 83 screw-threaded into the angular portion 72 of the arm 67 and having at one end thereof a head or flange 84 positioned to be engaged by the outer end of the lug 80 of the finger 79. As clearly shown in Fig. 5, when the bag moves the finger 79 outwardly of the channel 78, the lug 80 engages the head 84 of the abutment-forming screw 83 and moves the roller-equipped arm 67 in a direction to maintain the switch 38 in a closed position until the bag has passed beyond the rear end of the finger 79. As hereinbefore stated, the switch 38 is of the type which permits substantial overtravel of the switch button 39 in a switch-closing direction, so that said outward movement of the roller 77 has no effect upon the switch after the same has been initially closed. However, movement of the roller 77 to its extreme laterally inward limit of movement will cause the switch 38 to open and de-energize the solenoid 34 to terminate the feeding and stitching operation.

When it is desired to close and stitch a filled bag A, the upper end portions B of the bag are moved together as indicated in Figs. 1 and 3 to 5, inclusive. Assuming that the motor 25 is in operation, the bag A is manually or otherwise moved in a direction from the right to the left with respect to Figs. 3 to 5, inclusive, the closed portion B thereof engaging the cam roller 77

of the control member 65. Continued movement of the bag A causes the roller 77 and parts associated therewith to be moved laterally outwardly to the position indicated in Fig. 4 wherein the top portion B of the bag A lies between the roller 77 and the base plate 21. Movement of the roller 77 to its position of Fig. 4 causes the switch-operating arm 67 to be swung on the axis of its shaft 68 to close the switch 38. Closing of the switch 38 energizes the solenoid 34 to cause the clutch 29 to bring the pulley 27 into operative engagement with the shaft of the motor 25. The sewing and feeding mechanism stitches and feeds the tapes T and moves the same toward the left with respect to Figs. 3 to 5, inclusive. As the bag A continues to be fed to the left, the upper end B of the bag A is stitched between the tapes T. Movement of the bag A during the stitching and feeding operation causes the upper portion B of the bag to engage the cam-acting portion 82 of the control finger 79 and moves said control finger out of the channel 78 to the position shown in Fig. 5. During the laterally outward travel of the finger 79, the member 63 is moved thereby to and beyond the point where the cam lug 62 engages and runs over the cooperating cam lug 61. As above described, this momentary engagement of the cam lug 62 with the lug 61 causes the cutter blade 46 to sever the tape T and stitching therein at a point laterally outwardly of the side edges of the bag A. As soon as the same lug 62 has passed beyond the cam lug 61, the torsion spring 52 moves the cutter 46 to its normal position of Figs. 3 and 4 and the upper end B of the bag A and the tapes T are allowed to be fed therepast. When the entire width of the bag has been stitched, and the opposite side of the bag passes the rear end of the control finger 79, the coil tension spring 64 moves the member 63 in a direction to bring the control finger 79 to its normal position. This inward movement of the control finger 79 causes the cam lug 62 to move over the cam lug 61 in the opposite direction and again causes the cutter blade 46 to execute another cutting operating laterally outwardly of the opposite side edge of the bag A. As above indicated, the roller 77 is maintained during the feeding and initial cutting operation in its switch-closed position by engagement of the outer end of the lug 80 with the abutment flange 84. Movement of the control finger 79 to its normal position of Fig. 3 under bias of the spring 64 permits movement of the control member 65 in a direction to allow the switch 38 to open, whereby deenergize the solenoid coil 34 and disengage the clutch 29 thus arresting stitching and feeding movements of the machine.

With this arrangement, I have been able to effect a great saving in tape and thread, particularly when there is an appreciable time interval between the feeding of separate bags through the machine, and manually starting and stopping of the machine between the feeding of the bags therethrough is eliminated. Moreover, by adjusting the abutment 83 on the control member 65, inaccuracies in several parts of the control mechanism may be corrected and efficient operation of the machine assured. The roller 77 may be adjusted longitudinally of the end portion 72 of the control member 65 to maintain the amount of wasted tape at a minimum when bags are being fed through the machine manually and not in definite spaced relationship.

My invention has been thoroughly tested and

found to be completely satisfactory for the accomplishment of the objectives set forth; and, while I have shown and described a commercial embodiment of my novel control mechanism, it will be understood that the same is capable of considerable modification without departure from the scope and spirit of the invention as defined in the claims.

What I claim is:

1. In a sewing machine, means for stitching articles successively fed in spaced relation, means for feeding a strip of reinforcing tape with said articles past the stitching means, drive means for simultaneous operation of said stitching and feeding means, means for cutting said tape at opposite sides of said articles, normally inoperative drive means for said tape-cutting means, a first article engageable control member movable transversely of the direction of feeding movement responsive to initial movements of the articles through the machine to set the first drive means into operation and adjustably shiftable in opposite directions parallel to the direction of feeding movements of said articles and tape, and a second article engageable control member responsive to continued movement of the articles through the machine to set the drive means for the tape-cutting means into operation in sequence and hold the first said control member in its drive means operative position during the sequence of operation of said tape-cutting means, said second control member releasing said first control member responsive to disengagement of the article from said second control element to render the drive means for the feeding and stitching means inoperative, shifting of said first control member in said directions parallel to the direction of feeding movement of said articles altering the position of said articles relative to the stitching means when the operation of the stitching and feeding means is initiated.

2. In a sewing machine, means for stitching articles successively fed in spaced relation, means for feeding a strip of reinforcing tape with said articles past the stitching means, drive means for simultaneous operation of said stitching and feeding means, means for cutting said tape at opposite sides of said articles, normally inoperative drive means for said tape-cutting means, a first article engageable control member movable transversely of the direction of feeding movement responsive to initial movements of the articles through the machine to set the first drive means into operation and adjustably shiftable in opposite directions parallel to the direction of feeding movements of said articles and tape, a second article engageable control member responsive to continued movement of the articles through the machine to set the drive means for the tape-cutting means into operation in sequence, and an abutment on the first control member engageable with said second control member to hold said first control member in its drive means operative position during the sequence of operation of said tape cutting means, movement of said second control member in a direction to render said tape-cutting means inoperative being responsive to disengagement of the article therefrom to release said first control member for movement thereof in a direction to render the drive means for the feeding and stitching means inoperative, shifting of said first control member in said directions parallel to the direction of feeding movement of said articles altering the position of said articles relative

to the stitching means when the operation of the stitching and feeding means is initiated.

3. The structure defined in claim 2 in which said first control member includes an article-engaging roller in tandem relationship to said second control member.

4. In a machine for stitching articles successively fed in spaced relation and stitching lengths of tape thereto, a base plate having a slot therein, a needle at one side of the base plate, a presser foot at the same side of the base plate, feed means at the opposite side of the base plate and operative through the slot therein in cooperation with the presser foot for feeding said articles with a strip of tape past the needle, drive means for jointly operating the needle and feed means, a switch-controlled clutch in said drive means, means for cutting said tape at opposite sides of said articles, normally inoperative drive means for said cutting means, a first article-engaging control member movable laterally of the base plate through pressure contact of the articles therewith in their initial movement through the machine, connections between said first control member and said switch operative to initiate and terminate operation of the needle and feed means, said first control member being adjustably shiftable in opposite directions parallel to the direction of feeding movements of said articles and tape, a second article-engageable control member in tandem relationship to said first member and movable laterally of the base plate through pressure contact of the articles therewith in their continued movement through the machine, connections between said second member and said normally inoperative drive means operative to cut the tape at opposite sides of the articles, said second member engaging the connections between said first member and said switch when engaged by said article whereby to hold said first member in its needle and feed operative position, and releasing said first member responsive to disengagement of the article from said second member to render the needle and feed means inoperative, shifting of said first control member in said directions parallel to the direction of feeding movement of said articles altering the position of said articles relative to the stitching means when the operation of the stitching and feeding means is initiated.

5. The structure defined in claim 4 in which said first article-engaging control member comprises a roller, and in which the connections therebetween and said switch include a rock arm pivoted intermediate its ends to said machine and mounting said roller to one end of said rock arm, the other end of said rock arm being engageable with said switch, said second article-engaging control member comprising a finger extending in the direction of travel of said articles.

6. In a machine for stitching articles successively fed in spaced relation and stitching lengths of tape thereto, a base plate having a slot therein, a needle on one side of the base plate, a presser foot on the same side of the base plate, feed means on the opposite side of the base plate and operative through the slot therein in cooperating with the presser foot for feeding said articles with a strip of tape past the needle, drive means for jointly operating the needle and feed means, a switch-controlled clutch in said drive means, means for cutting said tape at opposite sides of said articles, normally inoperative drive means for said cutting means, said base plate being provided with an outwardly opening channel extending longitudinally of the direction of feeding movement, a first article-engaging control member comprising a roller, a rock arm pivoted at its intermediate portion to said machine for limited rocking movements, and means mounting said roller on one end of said rock arm for common swinging movements with said rock arm toward and away from an article engaging position wherein a portion of said roller is contained within said channel, said roller mounting means being adjustably shiftable on said rock arm in opposite directions longitudinally of the direction of feeding movements of said articles and tape, the other end of said rock arm being engageable with said switch and operative to initiate and terminate operation of the needle and feed means, an article-engageable controlling finger in tandem relationship to said roller and movable laterally of the base plate into and out of said channel through pressure contact of the articles therewith in their continued movement through the machine, and connections between said finger and said normally inoperative drive means operative to cut the tape on opposite sides of the articles, said finger engaging a portion of said rock arm between said roller and the pivotal connection of the rock arm when engaged by said article, whereby to hold said rock arm in its needle and feed operative position, and releasing said rock arm responsive to disengagement of the article from said finger to render the needle and feed means inoperative.

HAROLD V. KINDSETH.

References Cited in the file of this patent

UNITED STATES PATENTS

Number	Name	Date
2,148,377	Lutz	Feb. 21, 1939
2,151,438	Pierce	Mar. 21, 1939
2,293,686	Allen	Aug. 18, 1942
2,539,627	Kindseth	Jan. 30, 1951