Dec. 14, 1971 R. E. BULLOCK, JR 3,626,632

TOY BUILDING BLOCK

Filed May 4, 1970

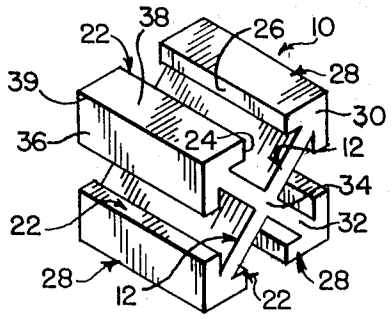

FIG. 1

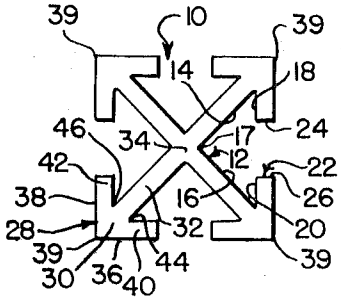

FIG. 2

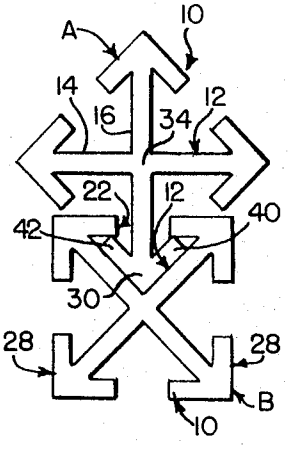

FIG. 3

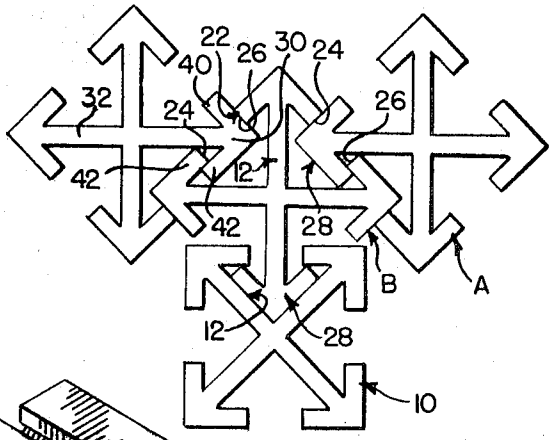

FIG. 4

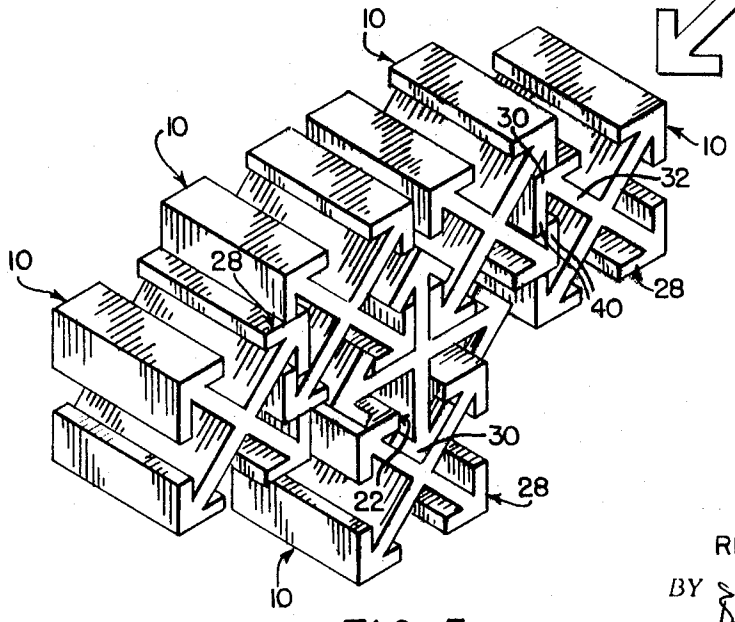

FIG. 5

INVENTOR
RICHARD E. BULLOCK, JR.

BY Benjamin C. Colman

ATTORNEY

United States Patent Office 3,626,632
Patented Dec. 14, 1971

3,626,632

TOY BUILDING BLOCK

Richard E. Bullock, Jr., 116 E. Shaw St.,
Charlotte, Mich. 48813

Filed May 4, 1970, Ser. No. 34,043
Int. Cl. A63h 33/08
U.S. Cl. 46—25 12 Claims

ABSTRACT OF THE DISCLOSURE

A toy building block is formed as an extruded or molded unit, of substantially square cross-sectional configuration, the four sides of the block being provided with longitudinally extending medial grooves having an arrowhead-shaped transverse section, whereby the corners of the block are formed into arrows arranged in a cruciform design, the heads of the arrows being undercut with flanges arranged substantially at right angles to each other and extending from the body of the arrowhead. The arrowheads of one block will fit within the grooves of a second block. The arrowheads not only can fully seat in a complementary groove of a substantially identical block, but an arrowhead of one block can partially seat in an undercut portion of the groove of a second block, an arrowhead of the second block engaging the arrowhead of the first block by the same flanges. When the two blocks are thus engaged, they are disposed in parallel alignment. When the arrowhead of one block is fully engaged in a groove of a second block, the cruciform core of the first block is at 45° to the cruciform core of the second block.

The invention generally involves the construction of a toy building block having a substantially square transverse section of any desired length, which can be molded or extruded of a metal, such as aluminum, or of a suitable substantially firm plastic material, such as a styrene, low or high density polyethylene, polypropylene, polyvinyl polymer, or the like. The block is provided with longitudinally extending slots and grooves 90° apart and medially of the sides of the block. The grooves have a transverse section generally in the shape of an arrowhead, in which the adjacent meeting surfaces are substantially at right angles to each other, the lower ends of the meeting surfaces being inturned to an entry slot for the groove. The corner portions of the block, formed by these grooves, are in a cruciform arrangement of arrows in which the two outer surfaces of the arrowhead form a right angle apex and the stem or shaft portion of the arrow blends into the arrowhead at undercut portions, so that two laterally diverging flanges extend from the arrowhead at right angles to each other. Each of the arrows of the block in the cruciform design is at 90° to the next, alternate arrows being in alignment and oppositely directed.

The peripheral dimensioinal configuration of the arrow-shaped grooves is substantially that of the transverse section of the arrowhead of one block, each of the blocks being substantially identical in transverse section, will dovetail with and smoothly enter a lateral side groove of a second block, the arrowhead with its lateral diverging flanges fully seating in such groove, the stem of the arrow projecting through the entry slot of the groove and spaced from the sides of the slot defined by two adjacent adjacent opposed flanges of adjacent corner arrowheads. The grooves are defined by adjacent arrow stems and the arrowhead flanges. Because the lateral side groves and entry slots extend from end to end of the block, the blocks are engaged by sliding the arrowhead of one block into the slot and groove of a second block at its end.

The width of the entry slot into the arrowhead-shaped groove defined by adjacent arrowheads and stems allows

an arrowhead of a first block to partially enter the groove of a second block with one side of the arrowhead lying within the groove and the other side of the arrowhead, particularly the laterally-extending flange portion, projecting beyond and outside of the first block. The inserted flange of the first block and the engaged flange of the second block lie in substantially parallel, overlapping and engaging relationship. The width of the entry slot is substantially filled with the engaging arrowhead, the latter's radius of rotation, i.e., its thickness and cross-sectional dimensions, being such that it cannot rotate out of engagement from the second block.

The prior art contains disclosures of some cruciform designs for inter-engaging blocks, such as Glukes No. 2,406,759 and Glukes No. 3,310,906. A partial cruciform arrangement in a toy building block is that disclosed in Meehan et al. No. 2,800,743. Each of these prior art references discloses block corner portions arranged to slide into lateral medially disposed complementary grooves of other substantially identical blocks or units. The corner portion must fully seat within such medial groove, there can be no partial insertion or engagement of the two blocks.

The construction of the instant invention, although it provides for fully seating the corner portion of one block within the groove of a second block, nevertheless provides for partial insertion of an arrowhead to effect positive engagement of the two blocks. Partial insertion and engagement permits blocks to be arranged in parallel with each other, while full insertion of the arrowhead disposes engaged blocks at a 45° angle to each other. By virtue of this feature, blocks can be arranged in stepped relationship to produce structures not heretofore possible with blocks built according to the prior art references.

It is therefore an object of the invention to provide in a building block a plurality of longitudinally extending undercut grooves dsposed medially of the side walls of the block, producing a cruciform arrangement of arrows and undercut grooves disposed medially of the side walls of the block. It is another object to provide a block of substantially square transverse section which can be molded or extruded of metal or of plastic materials. Still another object is to provide a symmetrical arrangement of corner portions of a block which can be fully seated or partially seated in a side wall groove of a second substantially identical block. A further object is to provide undercut arrowhead portions at the corners of the blocks so that engaged arrowheads partially inserted into complementary grooves have overlapping engaging arrowhead flanges and the arrowheads are disposed in opposed overlapping relationship.

Various further and more specific objects, features and advantages of the invention will appear from the description given below, taken in connection with the accompanying drawings, illustrating by way of example preferred forms of the invention. Reference is here made to the drawings annexed hereto and forming an integral part of this specification, in which:

FIG. 1 is a perspective view of a building block embodying the inventive construction.

FIG. 2 is an end elevational view of the block illustrated in FIG. 1.

FIG. 3 is an end elevational view of two blocks engaged by an arrowhead of one block fully seated in a groove of the second block.

FIG. 4 is an end elevational view of an arrowhead of each of two blocks partially disposed in adjacent oppositely-directed grooves of the two blocks, flanges of the two arrowheads being disposed in overlapping engaging relationship.

FIG. 5 is a perspective view of a plurality of engaged blocks, some of which show full seating of arrowheads

and some engaged with partial seating of arrowheads.

As shown in the several views of the drawing, each of the building blocks **10** comprises a body having lateral longitudinally extending side grooves **12** disposed medially of each side from end to end of the block body, slots **22** providing entry into each groove, corner arrows **28**, and block ends **48** and **50**. The block body **10** is of substantially square transverse cross-sectional configuration, the corner arrows **28** being arranged 90° to each other, the length of the block being variable as desired or required. The block may be of a length equal to, shorter or longer than the width of a side, or any multiple or proportion of such width.

The side groove **12** comprises meeting surfaces **14** and **16**, arranged at an angle to each other with an apex **17** substantially complementary to the cross-sectional configuration of the corner edges **39** of the block, undercut inturned surfaces **18** and **20** connected to the surfaces **14** and **16** respectively, by fillets **46** and **44** respectively. The slot **22** providing entry to the groove **12** is defined by the edges **24** and **26** of the arrowhead flanges **42** and **40** respectively.

Each of the corner arrows **28** comprises an arrowhead body **30** connected by a stem **32** to the cruciform core **34** of the four arrows **28** forming the square cross-sectional configuration of the block, the arrowhead body **30** further comprising the outer surfaces **36** and **38**, flanges **40** and **42** having their inner surfaces **20** and **18** respectively and the terminal edges **26** and **24**, and fillets **44** and **46**, respectively.

The stem **32** is defined by the groove surfaces **14** and **16** of adjacent grooves **12**, the stems **32** of the four arrows **28** terminating in the cruciform core **34**.

Each of the grooves **12** and each of the corner arrows **28** have the construction described above, each groove of one block being complementary to and adapted to fully seat and receive a corner arrow of another block upon sliding the corner arrow **28** of the second block into the groove **12** of the first block **10** at either end **48** or **50** of the first block. The fully seated conjunction of two blocks is clearly illustrated in FIG. 3. It will be noted that although the corner arrow surfaces **36** and **38** of block A make substantially close complementary contact with the groove surfaces **16** and **14** respectively of block B, the flanges **40** and **42** of block A seating within the fillets **44** and **46** of the groove **12** of block B, these flanges do not fill the entire space of the groove under the arrowhead body **30** nor does the stem **32** of the arrowhead fill the slot **22** of block B, but substantial open space remains. The flanges of the corner arrow **28** of block A being defined by the inturned surfaces **18** and **20** and their adjacent fillets **46** and **44** respectively, the flanges blend into the arrowhead body **30**. The thin arrow stem **32** enables the blocks A and B to be engaged, as illustrated in FIG. 4, by adjacent overlapping flanges of the two blocks, the arrowhead body **30** substantially filling the entry slot **22** of the groove **12** in block B.

In this conjunctive relationship (FIG. 4), the arrowhead **30** of block A enters and seats in the groove **12** of block B only partially, the arrowhead body portion under fillet **46** to the opposite outer surface **36** substantially filling the slot **22** between its defining edges **24** and **26** respectively of two adjacent corner arrows **28** of block B. The arrowhead flange **42** of block A is disposed in parallel and adjacent overlapping and oppositely directed relationship with arrowhead flange **42** of the engaging corner arrow **28** of block B, flange **42** of block A having its surface **18** in overlying relationship with surface **18** of flange **42** of block B under the fillet **46** of the groove **12** in block B. As will be observed in FIG. 4, blocks A and B now assume a parallel, engaged, connected relationship, as distinguished from the angular relationship of the same two blocks illustrated in FIG. 3, wherein the cruciform core and corner arrows of block A are disposed at 45° to the cruciform core and arrows of block B.

A plurality of blocks can be arranged and connected to each other either by full seating of a corner arrow **28** of one block in a groove **12** of a second block, according to the structure illustrated in FIG. 3, and/or by partial seating, engagement and connection according to the construction illustrated in FIG. 4. Such a combination of blocks is illustrated in perspective view in FIG. 5.

The significant improvement of this invention over the prior art resides in providing the undercut inturned flange surfaces **18** and **20** with their connecting arrowhead fillets **46** and **44** blending into the narrow thin stem **32**. These structural features permit partial seating and engagement according to the conjunction described above and illustrated in FIG. 4. It will be observed that block A cannot be rotated out of the slot **22** of block B when arrowhead **28** of the block A is partially seated in groove **12** of block B. The arrowhead edge **39** extends beyond the radius of rotation established by the width of slot **22** defined by the distance between flange edges **24** and **26**, thus preventing disengagement by rotation of either block A or block B from the other.

Such parallel relationship of conjoined blocks, according to the invention disclosed herein, permits and provides an improved building block structure, which cannot be achieved when the blocks can only be related in a conjunction of two blocks at a 45° angle to each other required by full seating of a corner portion of one block in a complementary groove of a second block.

Although certain particular embodiments of the invention are hereindisclosed for purposes of explanation, further modifications thereof, after study of this specification, will become apparent to those skilled in the art to which the invention pertains. Reference should be had to the appended claims in determining the scope of the invention.

I claim:

1. A unitary integrally formed building block comprising a body having

a longitudinal groove extending centrally along each side of said body from one end to the other end thereof,

each of said grooves having a cross-sectional configuration substantially in the form of an undercut arrowhead,

an entry slot into each of said grooves at the side of said body,

arrow portions defined by said grooves and their respective entry slots,

a cruciform core connected to and forming the base of said arrows disposed substantially central and axial of said body,

each of said arrow portions having an arrowhead of transverse cross-sectional shape generally complementary to said grooves and a stem extending from said arrowhead to said cruciform core,

each said arrow portion and its stem being defined by two adjacent said grooves,

each said arrowhead having an undercut portion of each side of said stem defining laterally and rearwardly extending flanges at an angle to each other less than 180°,

the dimensional distance between a side of said arrowhead and the undercut portion at the remote side of said stem under said stem under said arrowhead being substantially equal to but no greater than the width of an entry slot,

the dimensional relationships of said arrow portions, grooves and entry slots being such that each said arrowhead of one said block is adapted to be slidingly inserted in an entry slot and groove of a second said block so that one distal edge of said second block arrowhead definining said entry slot is in closely adjacent relationship with the outer side of one arrow portion of said one block arrowhead, and the arrow

portion of said second block defining the opposite side of said entry slot is in overlying and closely adjacent engaging relationship with and in the undercut region of the other arrow portion of said one block arrowhead, to limit and prevent rotation of said one block arrowhead out of engagement with said second block arrow portions next thereto adjacent, whereby one said arrow portion of one block is slidingly and fully receivable in one said groove of a second substantially similar block, and alternatively one said arrowhead of one block is partially slidingly receivable in one said groove and its entry slot of a second substantially similar block, effecting secure engagement of said blocks.

2. The building block defined in claim 1 wherein said block has a substantially rectangular transverse cross-sectional shape.

3. The building block defined in claim 2 wherein said transverse cross-sectional shape is substantially square.

4. The building block defined in claim 3 wherein said arrow portions are located at the corners of said substantially square transverse cross-sectional shape, and are disposed 90° apart from each other.

5. The building block defined in claim 1 wherein said arrow portions are substantially identical in transverse cross-sectional shape.

6. The building block defined in claim 1 wherein said stems extend radially from said cruciform core.

7. The building block defined in claim 1 wherein each of said arrowheads of one block is adapted to be fully seated in the complementary groove of a second block, said stem connected to said arrowhead being disposed intermediate and spaced from the edges of the arrow portions defining the entry slot of said complementary groove.

8. The building block defined in claim 7 wherein said stem is disposed substantially medially of said entry slot.

9. The building block defined in claim 1 wherein, when an arrowhead of said one block is slidingly received in one said groove and its entry slot of said second substantially similar block, to effect engagement of said blocks,

the flange of said arrowhead received in said groove is disposed in parallel overlapping relationship and engagement with the complementary flange of the arrowhead defining one side of said groove and said entry slot.

10. The building block defined in claim 1 wherein, when an arrowhead of said one block is slidingly received in one said groove and its entry slot of said second substantially similar block, to effect engagement of said blocks,

said one block is disposed in substantially the same attitude and posture as said second block and at a different elevation.

11. The building block defined in claim 1 wherein, when an arrow portion of said one block is slidingly fully received in one said groove of said second substantially similar block,

said one block is disposed at an attitude and posture normal to that of said second block.

12. The building block of claim 11, wherein

said arrow portion of said one block is disposed radially of said cruciform core of said second block and intermediate the stems of adjacent arrow portions of said second block defining said one groove.

References Cited

UNITED STATES PATENTS

2,800,743	7/1957	Meehan et al.	46—25
2,968,118	1/1961	Paulson	46—25 X
1,898,297	2/1933	Fox	46—25 X
1,084,597	1/1914	Anft	46—25

LOUIS G. MANCENE, Primary Examiner

D. L. WEINHOLD,, Assistant Examiner