Aug. 18, 1931. W. C. CARTER 1,819,591

ELECTRICALLY OPERATED FUEL PUMP

Filed Sept. 28, 1925

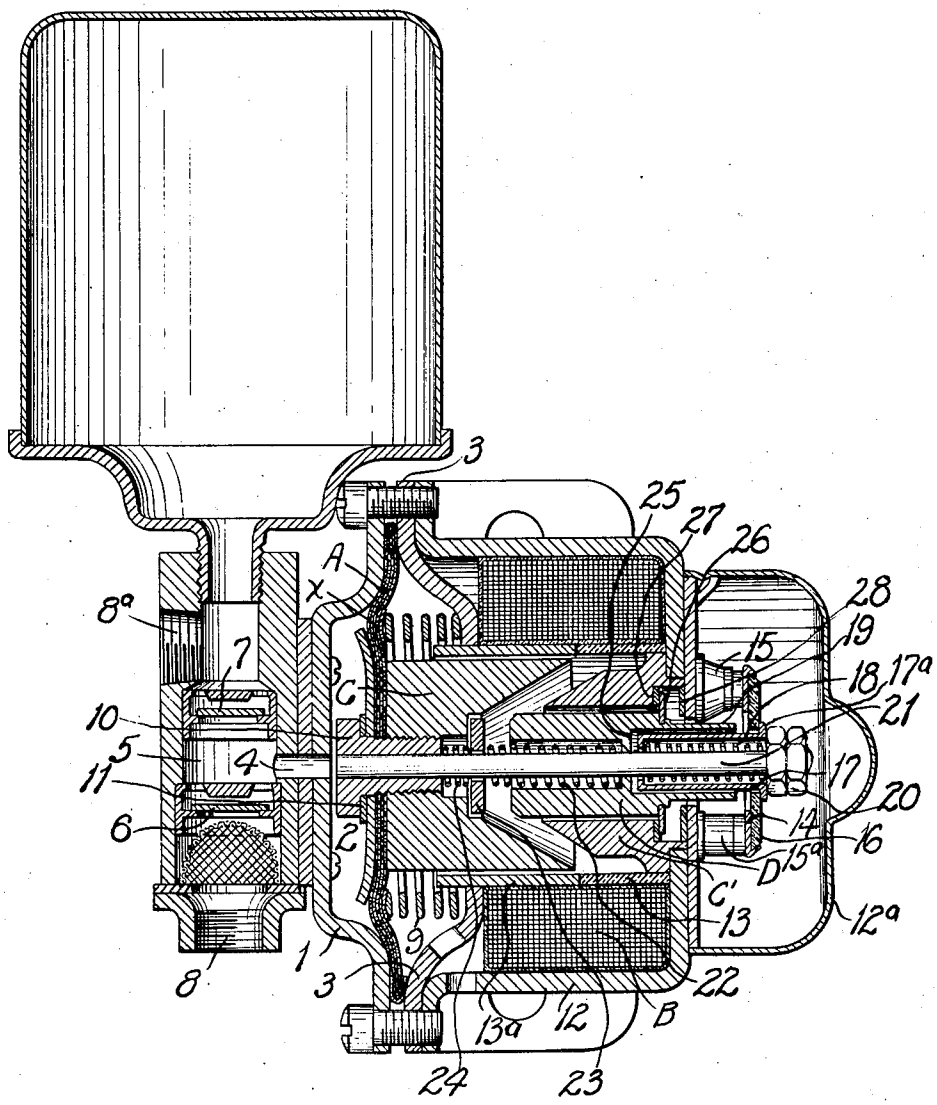

INVENTOR:
WILLIAM C. CARTER.

BY Bakewell & Church

ATTORNEYS.

Patented Aug. 18, 1931 1,819,591

UNITED STATES PATENT OFFICE

WILLIAM C. CARTER, OF FLINT, MICHIGAN

ELECTRICALLY-OPERATED FUEL PUMP

Application filed September 28, 1925. Serial No. 59,149.

This invention relates to fuel pumps, such as are used for pumping liquid fuel from a lower to a higher level, and particularly, pumps of the type in which the pumping element consists of a non-metallic diaphragm whose peripheral portion is clamped and held against movement, and whose central portion is attached to an actuating means in such a way that the intermediate portion of the diaphragm is capable of flexing back and forth, and thus cause fuel to be drawn into and expelled from a pumping chamber.

One object of my invention is to provide a pump of the general type mentioned, that is equipped with a laminated non-metallic diaphragm whose layers or pieces will not wrinkle, separate or bulge at the intermediate portion of the diaphragm, even though the diaphragm becomes excessively heated.

Another object of my invention is to provide a pump that is equipped with a fabric diaphragm that will not make an objectionable noise when the pump is in operation.

The figure of the drawing is a vertical longitudinal sectional view of a pump embodying my present invention.

Referring to the drawing, A designates the diaphragm of the pump, which is preferably composed of a plurality of layers x of fabric treated to render it impervious to water, gasoline and the like, without making it brittle or inflexible. Said diaphragm is arranged in opposed relation to a rigid, cup-shaped member 1 so as to form a pumping chamber 2, and the peripheral edge portion of said diaphragm is combined with the member 1 and an opposed clamping member 3 that tightly clamps or grips the edge of the diaphragm. An actuating means is attached to the central portion of the diaphragm in such a way that the intermediate portion of the diaphragm, i. e., that portion located between the peripheral edge and the central portion, is capable of flexing back and forth, so as to draw liquid fuel into said pumping chamber from a source of supply, and thereafter force said fuel out of said chamber to an internal combustion engine or to a carburetor associated with such an engine. The pumping chamber 2 is connected by one or more parts 4 with a valve passageway 5 equipped with an inlet valve 6 and a discharge valve 7. When the pump is in operation liquid fuel is drawn from a source of supply through a conduit that is connected to an inlet 8 at the lower end of the valve passageway 5 and is discharged through an outlet 8^a at the upper end of the said passageway.

In order to maintain the diaphragm in the condition in which the pump will operate most efficiently, means is provided for preventing the layers x of the intermediate portion of the diaphragm from wrinkling, bulging or separating, even though the diaphragm becomes excessively heated. This is highly desirable, in that it prevents the volume of the pumping chamber from being cut down during the suction stroke of the diaphragm, by reason of the intermediate portion of the diaphragm bulging towards the pumping chamber. While various means may be used to actuate the diaphragm and to prevent the layers of the central portion of the diaphragm from separating or bulging, I prefer to flex the diaphragm A in one direction by a solenoid, and flex said diaphragm in the opposite direction by a spring. In the form of my invention herein illustrated the solenoid used to flex the diaphragm in one direction comprises a coil B and a core composed of a movable core piece C and a stationary core piece C′, the movable core piece C being connected to the central portion of the diaphragm A in any suitable manner, as, for example, by means of a screw or bolt 10, screwed into the core piece C and arranged with its head in engagement with a clamping plate 11 that clamps the central portion of the diaphragm A against the core piece C. The spring previously referred to, that is used to flex the diaphragm in the opposite direction, is designated by the reference character 9 and is arranged in engagement with the flexible intermediate portion of the diaphragm at a point between the peripheral edge of the diaphragm and the central portion of the diaphragm that is clamped to the movable core piece C. Said spring 9 exerts sufficient pressure on the diaphragm to prevent the layers of the intermediate portion of

the diaphragm from wrinkling, bulging or separating, and hence, it eliminates the possibility of the volume of the pumping chamber being cut down during the suction stroke, due to the bulging of the diaphragm. Due to the fact that the movable member C of the core is directly connected to the diaphragm A, the spring 9 constantly exerts pressure on the core piece C in a direction tending to move it away from the stationary core piece C′, and as said spring 9 surrounds the core piece C and is interposed between the diaphragm A and the opposed member 3 which forms an abutment for one end of the spring 9, it effectively prevents the diaphragm from flopping back and forth in opposite directions to the pumping strokes, thereby preventing the diaphragm from making an objectionable noise when the pump is in operation and adding materially to the life of the diaphragm.

The coil B of the solenoid is arranged inside of a housing of magnetic material formed by the member 3 previously referred to and by a substantially cup-shaped member 12 that is combined with the member 3, as illustrated in the drawing. The spool on which the coil B of the solenoid is wound preferably comprises a tubular portion 13 of non-magnetic material and a tubular portion 13ª of magnetic material that is connected to the housing member 3 and which is of sufficient area to insure the flux passing freely from the flux field to the core when the solenoid circuit is closed, thereby making it possible to operate the pump with a relatively small amount of electric current. Both members C and C′ of the core are formed of magnetic material and the stationary member C′ has a cone-shaped portion that telescopes in a tapered socket in the inner end portion of the movable member C of the core. A hammer D, which is also formed of magnetic material, is reciprocatingly mounted in the stationary member C′ of the core at the center of said member, which hammer will be hereinafter more fully described.

The electric circuit that is used to energize the solenoid of the pump is provided with two switches, one a manually-operated switch (not shown) that is closed when the pump is in use, and the other an automatically-operating, intermittent switch that opens and closes the solenoid circuit intermittently so as to cause the movable core piece C to reciprocate, and thus actuate the diaphragm or pumping element A of the pump. Said intermittent switch may be of any preferred construction, the one herein illustrated, comprising a movable contact consisting of a revolubly mounted member of disk or annular form arranged so that it will move into and out of engagement with two stationary contacts, one of which is electrically connected with the coil of the solenoid and the other being grounded. Said intermittent switch is arranged inside of a removable cap piece 12ª on the end wall of the housing of the solenoid and comprises a revoluble member 14 of disk or annular form that constitutes the movable contact of the switch and two stationary contacts 15 and 15ª arranged in spaced relation at one side of the movable contact 14, one of said stationary contacts being electrically connected to the coil B of the solenoid and the other stationary contact being grounded. The movable contact 14 is carried by an insulator 16 that is rotatably mounted on a tubular member 17 which constitutes a housing for a spring 18 that holds the contacts of the intermittent switch closed when the solenoid is imparting a suction stroke to the diaphragm. Said insulator 16 is moved outwardly or away from the stationary contacts 15 and 15ª by means of a tubular striking portion 19 on the hammer D which surrounds the spring housing 17, and said insulator is moved inwardly towards said stationary contacts by means of a stop 20 on a rod 21 that is rigidly connected with the bolt or screw 10 in the movable core piece C. The hammer D is so constructed and arranged that it will impart a sharp blow to the insulator 16 that carries the movable contact 14 of the intermittent switch in a direction to open the solenoid circuit with a quick break at the end of the suction stroke of the diaphragm A. In the pump herein illustrated the hammer D is provided with a center socket that houses a spring 22 that is stronger than the spring 18, said spring 22 surrounding the rod 21, previously referred to. A washer 23 is mounted on said rod between one end of the spring 22 and a spring 24 that is stronger than the spring 22 and which is arranged so that it bears against the screw or bolt 10 in the movable core piece C, the spring 22 being confined between the washer 23 and the inner end of the socket in the hammer D that receives said spring. The striking portion 19 of the hammer surrounds the spring housing 17, and the inner end of said spring housing is arranged in opposed relation to a shoulder 25 on the hammer. The hammer D is arranged to reciprocate freely inside of the stationary member C′ of the core and is provided with a radially-projecting flange 26 that is positioned between two stationary stops 27 and 28 of cork or other relatively soft material that co-operate with said flange to limit the movement of said hammer in opposite directions.

When the solenoid circiut is open the movable member C of the core is held spaced away from the stationary member C′ by the expansive force of the spring 9 and the movable contact 14 of the intermittent switch is held in engagement with the stationary contacts 15 and 15ª by the pressure which the

stop 20 on the rod 21 exerts on the spring housing 17 whose flange 17ª bears against the insulator 16 that carries said movable contact 14. When the manually-operable switch of the solenoid circuit is closed, the movable member C of the core moves inwardly towards the stationary core member C′ and the hammer D which is free to reciprocate relatively to the stationary core member C′ assumes the position shown in the drawing.

The inward movement of the core member C, namely, movement to the right, looking at the drawing, imparts a suction stroke to the diaphragm A and also builds up energy in the spring 22 of the hammer D and in the stiff spring 24 that is arranged on the other side of the washer 23, it being understood that the hammer D is held at rest during the inward stroke of the core member C by the magnetic attraction of the solenoid. During this time, namely, when the solenoid is imparting a suction stroke to the diaphragm, the contacts of the intermittent switch are held pressed tightly together by the force of the spring 18 which is under compression at this time. The spring 18 expands when the stop 20 on the rod 21 moves to the right, and thus exerts pressure on the spring housing 17 in a direction to hold the flange 17ª thereon in engagement with the insulator 16. At the time the core member C starts to move inwardly, namely, to the right from the position shown in the drawing, the space between the tapered surface on the core member C and the inclined surface on the inner end of the hammer D is less than the space between the tapered surface on the core member C and the tapered surface on the core member C′. The inward movement of the core member C reduces the width of said spaces and when the core member C reaches such a position that the washer 23 bears against the inner end of the hammer D, part of the flux path becomes short-circuited across the air gap or space between the tapered surface of the core member C and the inclined surface on the inner end of the hammer, due, of course, to the fact that said space or air gap is of less width than the space or air gap between the tapered surface on the core member C and the tapered surface of the core member C′. Consequently, the hammer D starts to move with the core member C, thereby causing the pulling force of the solenoid to be reduced automatically to such an extent that the solenoid exerts practically the same pull on the diaphragm at the end of the suction stroke as it exerted on the diaphragm at the beginning of the suction stroke. In other words, by forming the hammer D in such a manner that the inner end of same is separated from the tapered surface of the core member C by an air gap of less width than the air gap between the tapered surfaces of the core members C and C′, I prevent the pull of the solenoid on the diaphragm from building up progressively as the core member C moves inwardly. This is highly desirable, as it prevents the diaphragm from being operated at such a high speed that time enough is not provided to insure a full charge of fuel entering the pumping chamber before the diaphragm starts to move in the opposite direction, namely, to the left, under the influence of the spring 9. At the time the hammer starts to move with the core member C, the spring 24 and spring 22 are exerting a longitudinal thrust on the hammer D that is only slightly less than the force which holds the core member C and hammer D together. Further inward movement of the core member C reduces the air gap between the members C and C′, thereby cutting down the attraction power of the hammer D to such an extent that the spring 24 breaks it loose from the core member C, and the hammer D thereafter moves outwardly under the influence of the spring 22, the shoulder 25 on said hammer engaging the inner end of the spring housing 17 and moving said housing longitudinally in a direction to relieve the pressure on the insulator 16 which carries the movable contact 14 of the intermittent switch. Thereafter, the striking portion 19 of said hammer imparts a sudden blow to the insulator 16 and moves it outwardly away from the stationary contact of the intermittent switch, thus causing the solenoid circuit to be opened with a quick break. Immediately thereafter the core piece C moves outwardly, or to the left, back to the position shown in the drawing, under the influence of the spring 9 whose tension was increased by the inward movement of said core piece, and during this outward stroke of the core piece C the stop 20 on the rod 21 first compresses the spring 18 into the spring housing 17, and then engages the flange 17ª on the spring housing and moves said housing in a direction to compress the spring 22, thus causing the contact 14 to move into engagement with the contacts 15 and 15ª as shown in the drawing, and close the solenoid circuit.

The parts of the pump that may be said to constitute a motor and which comprise the solenoid, the switch for governing the solenoid circuit and the actuating means for the contacts of the switch, are not herein claimed, as they form the subject-matter of my pending application for patent Serial No. 319,241, filed November 14, 1928, patented Nov. 25, 1930, No. 1,782,407.

Having thus described my invention, what I claim as new and desire to secure by Letters Patent is:

1. A fuel pump provided with a laminated non-metallic diaphragm that forms one wall of the pumping chamber, means for holding

the peripheral portion of said diaphragm against movement, an actuating means attached to the central portion of the diaphragm, the intermediate portion of the diaphragm lying between said central portion and peripheral portion being adapted to flex back and forth, and means for exerting pressure on the layers of the flexible intermediate portion of the diaphragm in a direction to prevent said layers from bulking or separating.

2. A fuel pump provided with a fabric diaphragm that forms one wall of the pumping chamber, means for holding the peripheral portion of said diaphragm against movement, an actuating means connected to the central portion of the diaphragm, the intermediate portion of the diaphragm lying between said central portion and peripheral portion being capable of flexing back and forth, and a means for taking up the slack in the intermediate portion of the diaphragm.

3. A fuel pump provided with a laminated non-metallic diaphragm that forms one wall of the pumping chamber, means for holding the peripheral portion of said diaphragm against movement, an actuating means attached to the central portion of the diaphragm, the intermediate portion of the diaphragm lying between said central portion and peripheral portion being adapted to flex back and forth, and an expansion spring arranged in engagement with the flexible intermediate portion of the diaphragm and disposed so as to hold the layers of said intermediate portion pressed together.

WILLIAM C. CARTER.