F. D. HALLOCK.

STARTING RHEOSTAT.

APPLICATION FILED JULY 6, 1908.

958,870. Patented May 24, 1910.

2 SHEETS—SHEET 1.

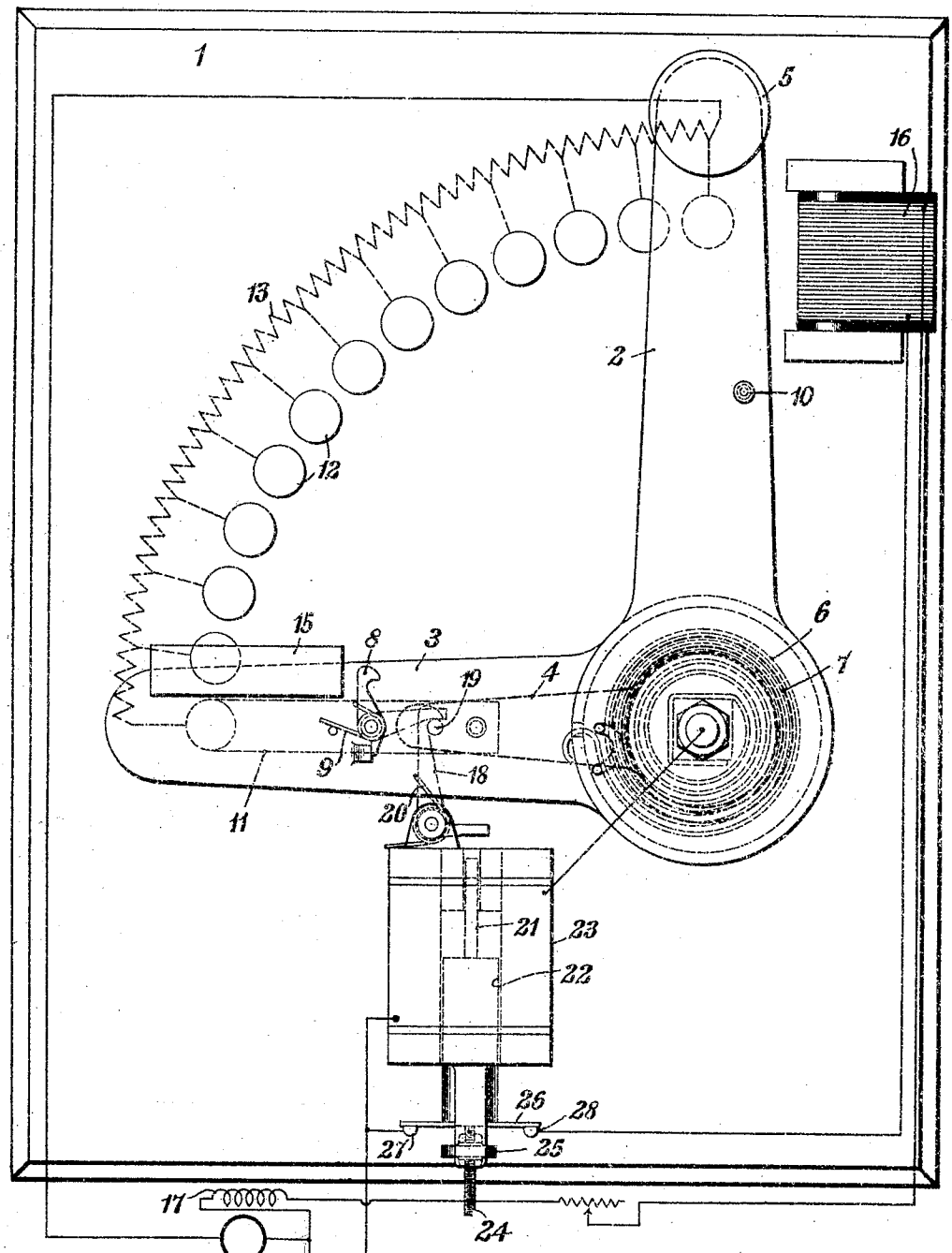

WITNESSES:

C. L. Belcher

Otto S. Schairer.

Fig. 1.

INVENTOR

Fletcher D. Hallock

BY

Wesley G. Carr

ATTORNEY

ANDREW B. GRAHAM CO., PHOTO-LITHOGRAPHERS, WASHINGTON, D. C.

1

F. D. HALLOCK.

STARTING RHEOSTAT.

APPLICATION FILED JULY 6, 1908.

958,870. **Patented May 24, 1910.**

2 SHEETS—SHEET 2.

Fig. 2.

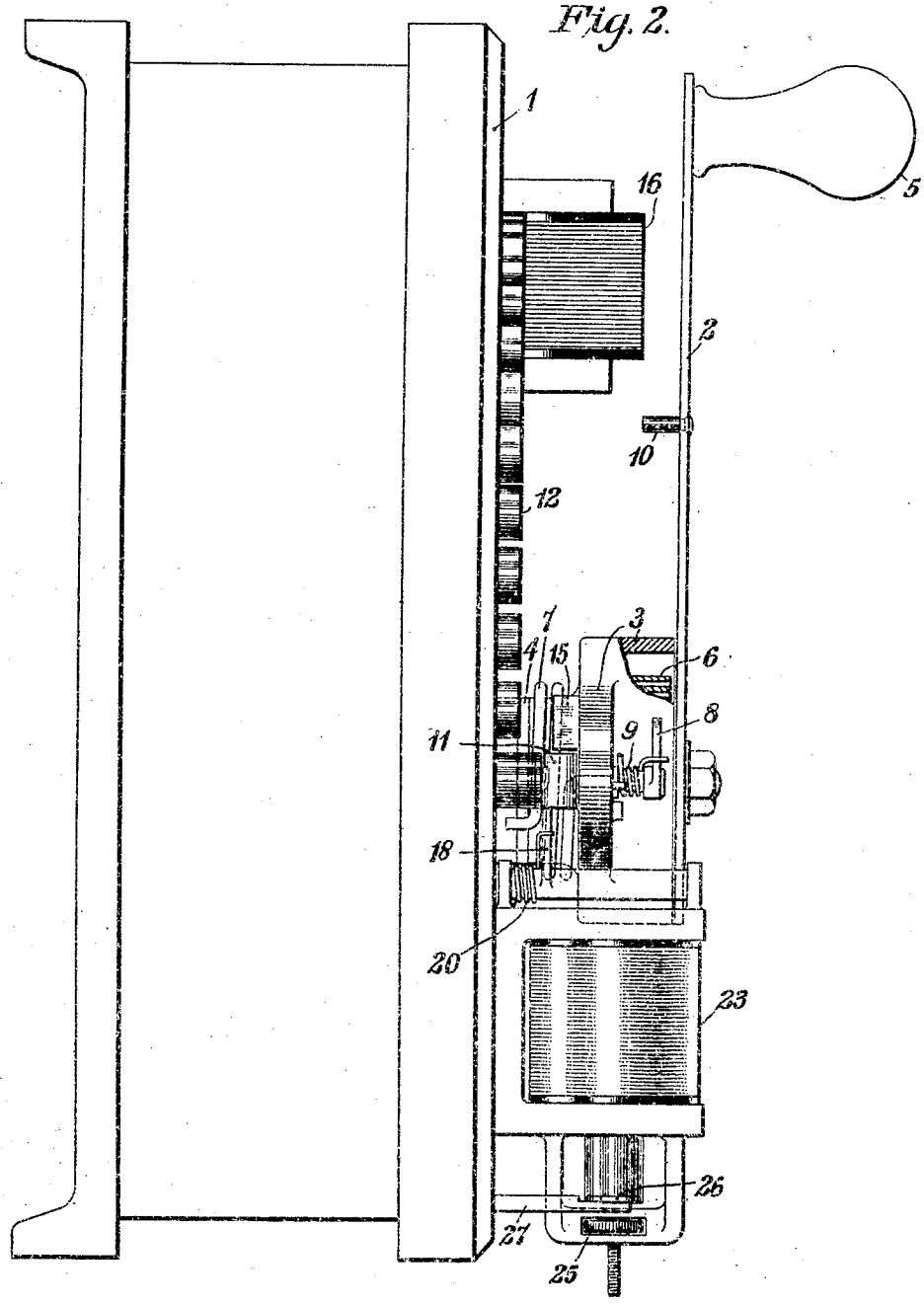

WITNESSES:

C. L. Belcher

Otto J. Schairer

INVENTOR

Fletcher D. Hallock

BY

Finley Gibson

ATTORNEY

ANDREW B. GRAHAM CO. PHOTO-LITHOGRAPHERS, WASHINGTON, D. C.

UNITED STATES PATENT OFFICE.

FLETCHER D. HALLOCK, OF PITTSBURG, PENNSYLVANIA, ASSIGNOR, BY MESNE ASSIGNMENTS, TO WESTINGHOUSE ELECTRIC & MANUFACTURING COMPANY, OF EAST PITTSBURG, PENNSYLVANIA, A CORPORATION OF PENNSYLVANIA.

STARTING-RHEOSTAT.

958,870. Specification of Letters Patent. **Patented May 24, 1910.**

Application filed July 6, 1908. Serial No. 442,226.

To all whom it may concern:

Be it known that I, FLETCHER D. HALLOCK, a citizen of the United States, and a resident of Pittsburg, in the county of Allegheny and State of Pennsylvania, have invented a new and useful Improvement in Starting-Rheostats, of which the following is a specification.

My invention relates to rheostats, and particularly to such rheostats as are employed for the purpose of starting electric motors.

The object of my invention is to provide a starting rheostat that shall comprise means for interrupting the motor circuit when it is traversed by more than a predetermined amount of current, irrespective of whether the resistance-governing member occupies an extreme position or an intermediate position.

Figure 1 of the accompanying drawings is a face view of a rheostat constructed in accordance with the present invention, the circuit connections thereof being shown diagrammatically, and Fig. 2 is a view, in side elevation, of the rheostat shown in Fig. 1.

Concentrically and pivotally mounted upon a panel or face plate 1 of the rheostat are three arms 2, 3 and 4, the arm 2 being freely movable and provided with an operating handle 5, the arm 3 being constrained or biased toward its initial position, or that shown in full lines, in the usual manner, by means of a spiral spring 6, and the arm 4 being constrained toward the position of the arm 3 by means of a helical spring 7.

The arm 3 is provided with a pivotally mounted dog or catch 8 that is normally maintained in the position shown by means of a spring 9 and is adapted to engage a pin 10 carried by the arm 2, so that movement of the arm 3 may be effected by means of the arm 2. The arm 3 is further provided with a contact member 11 adapted to engage a set or row of stationary contact terminals 12 that are mounted upon the face plate 1 concentrically with the pivotal mounting for the said arm and are connected respectively to suitable points of subdivision of a resistance 13, the said resistance being included in the circuit with the armature 14 of an electric motor. The arm 3 also carries an armature 15 for an electro-magnet 16, the winding of said magnet being preferably connected in series with the field magnet winding 17 of the motor, though it may be connected in the circuit in any other desired and suitable manner. The electro-magnet 16 acts upon the armature 15 to retain the arm 3 in its extreme right position, except when the voltage between the terminals of its winding falls, for any reason, below a predetermined value.

The arm 4 is normally retained in its initial position by means of a dog or catch 18 that engages a pin 19 carried by the said arm. The catch 18 is actuated against the pressure of a spring 20, so as to release the pin 19, by means of a rod 21 carried by a reciprocating armature or core 22 of an electro-magnet 23, provided the winding of the electro-magnet is traversed by more than a predetermined amount of current.

In order that adjustment of the current value at which the arm 4 will be released may be effected, the armature or core 22 is provided with a reduced extension 24 having screw-threads for the reception of a nut 25 to serve as a stop and determine the width of the air-gap between the armature and the stationary core portion of the electro-magnet.

In order that the electro-magnet 23 may also effect release of the arm 3 from its extreme right position and permit its return to its initial position, the armature 22 is provided with a switch member 26 that normally engages a pair of stationary contact terminals 27 and 28 and is separated therefrom when the armature is raised to interrupt the circuit of the winding of the electro-magnet 16.

In order to start the motor the arm 2 will be first moved from right to left to its extreme position, so that the dog 8 may engage the pin 10, and then the said arm will be moved from left to right in order to remove the resistance 13 in gradations from the armature circuit. When the arm 3 is moved to its extreme right position, the armature 15 is brought within the field of the electro-magnet 16 and the arm 3 is thereby maintained in the said position as long as the voltage applied to the circuit of the field magnet winding remains of such value that the force exerted by the electro-magnet 16 upon the armature 15 exceeds the force exerted upon the arm by the spring 6.

if more than a predetermined amount of current traverses the winding of the electro-magnet 23 during the movement of the arms 2 and 3 from left to right, the catch or dog 18 will be caused to release the pin 19. The arm 4 will then move quickly, under the action of the spring 7, toward the position of the resistance-governing arm 3, where it strikes the dog 8 and causes the same to be disengaged from the pin 10 upon the arm 2, with the result that the resistance-governing arm 3 will return to its initial position and carry the arm 4 with it. In order to again start the motor, the arm 2 must be returned to its extreme left position so as to permit the dog 8 to again engage the pin 10. If the winding of the electro-magnet 23 is traversed by more than a predetermined amount of current when the resistance-governing arm 3 occupies its extreme right position, the armature or plunger 22 of the electro-magnet will be raised, thereby interrupting the circuit of the winding of the electro-magnet 16. The armature 15 is then released and the arm 3 is permitted to return to its initial position.

I claim as my invention:

1. In a rheostat, the combination with a pivoted switch arm, and a resistance governed thereby, of a concentrically pivoted arm adapted to operate the resistance-governing switch arm, means for operatively connecting said arms, and a third concentrically pivoted arm adapted to interrupt the said operative connection upon the occurrence of abnormal circuit conditions.

2. In a rheostat, the combination with a pivoted member constrained or biased toward its initial position and a resistance governed thereby, of a concentrically pivoted member adapted to operate the resistance-governing member, means for operatively connecting the said members, and a third concentrically pivoted member adapted to interrupt the said operative connection to permit the resistance-governing member to return to its initial position upon the occurrence of abnormal circuit conditions.

3. In a rheostat, the combination with a movable member, and a resistance governed thereby, of a second movable member adapted to operate the resistance-governing member, means for operatively connecting said members, a third movable member adapted to interrupt said operative connection upon the occurrence of abnormal circuit conditions, and means for retaining the said member in its initial position during the continuance of normal circuit conditions.

4. In a rheostat, the combination with three concentrically pivoted movable members, and a resistance governed by one of said movable members, of an operative connection between the resistance-governing member and one of the other members, means for retaining the third movable member in its initial position except upon the occurrence of abnormal circuit conditions, the said member, upon its release, effecting interruption of the said operative connection.

5. In a rheostat, the combination with a movable member, and a resistance governed thereby, of a second movable member for operating the resistance-governing member, means for operatively connecting said members, a third movable member biased or constrained toward the position of the resistance-governing members, and means for retaining the said third member in its initial position except upon the occurrence of abnormal circuit conditions, the said member, upon its release, effecting interruption of the said operative connection.

6. In a rheostat, the combination with a movable member biased or constrained toward its initial position, and a resistance governed thereby, of a second movable member adapted to operate the resistance-governing member, means for operatively connecting said members, and a third movable member biased or constrained toward the position of the resistance-governing member and adapted to effect interruption of the said operative connection upon the occurrence of abnormal circuit conditions.

7. In a rheostat, the combination with a movable member biased or constrained toward its initial position, and a resistance governed thereby, of a second movable member adapted to operate the resistance-governing member, means for operatively connecting said members, a third movable member biased or constrained toward the position of the resistance-governing member, and means for retaining the third member in its initial position except upon the occurrence of abnormal circuit conditions, the said third member, upon its release, effecting interruption of the said operative connection.

8. In a rheostat, the combination with a movable member biased or constrained toward its initial position, means for retaining the said member in its extreme position except upon failure of the voltage of the circuit in connection with which the rheostat is employed, and a resistance governed by the said member, of a second movable member adapted to operate the resistance-governing member, means operatively connecting said members, a third movable member biased or constrained toward the position of the resistance-governing member, and means for retaining the third member in its initial position except when the current traversing the circuit in connection with which the rheostat is employed exceeds a predetermined amount, the said third member, upon its release, effecting interrup-

tion of the operative connection between the resistance-governing member and the second movable member.

9. In a rheostat, the combination with a movable member, and a resistance governed thereby, of a second movable member adapted to operate the resistance-governing member, means operatively connecting the said members, a third movable member biased or constrained toward the position of the resistance-governing member, a catch for retaining the said third member in its initial position, an electro-magnet adapted to cause the catch to release the said member when the winding thereof is traversed by more than a predetermined amount of current, movement of the third movable member toward the position of the resistance-governing member effecting interruption of the operative connection between the same and the second movable member.

10. In a rheostat, the combination with a movable member, and a resistance governed thereby, of a second movable member adapted to operate the resistance-governing member, means operatively connecting said members, a third movable member biased or constrained toward the position of the resistance-governing member, means for retaining the said third movable member in its initial position, and an electro-magnet adapted to effect release of the said third movable member when the winding thereof is traversed by more than a predetermined amount of current, movement of the third movable member toward the position of the resistance-governing member effecting interruption of the operative connection between the same and the second movable member.

In testimony whereof, I have hereunto subscribed my name this 30th day of June, 1908.

FLETCHER D. HALLOCK.

Witnesses:
H. C. NAGEL,
BIRNEY HINES.