Dec. 23, 1969 T. L. COOK 3,485,009

PACKAGING MACHINE

Filed April 4, 1968 5 Sheets-Sheet 1

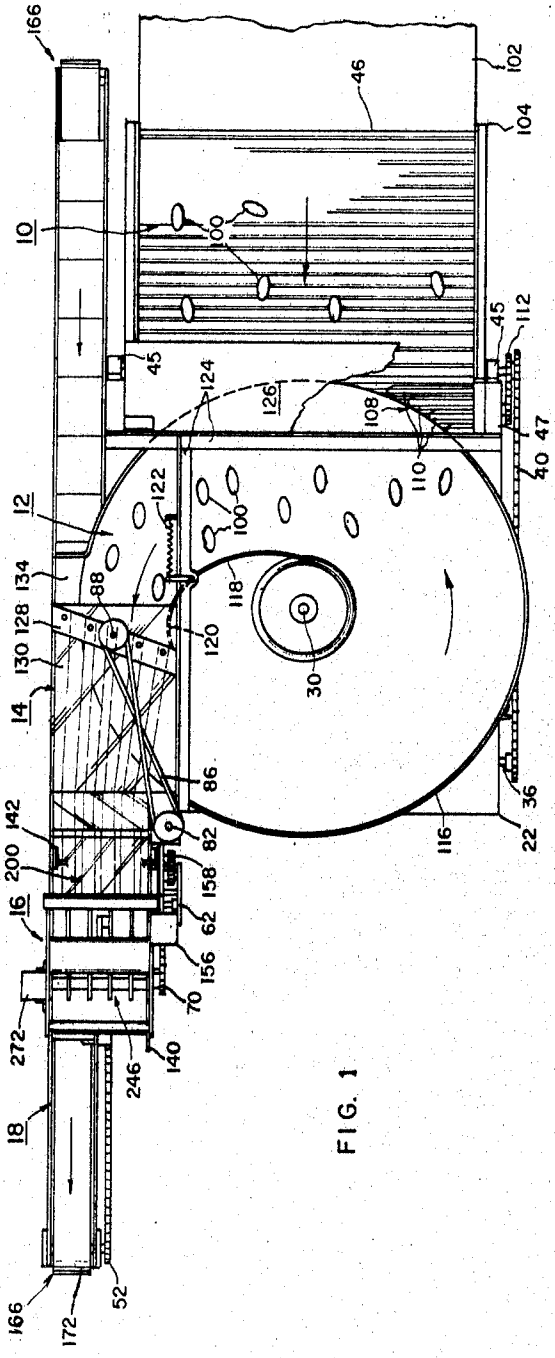

FIG. 1

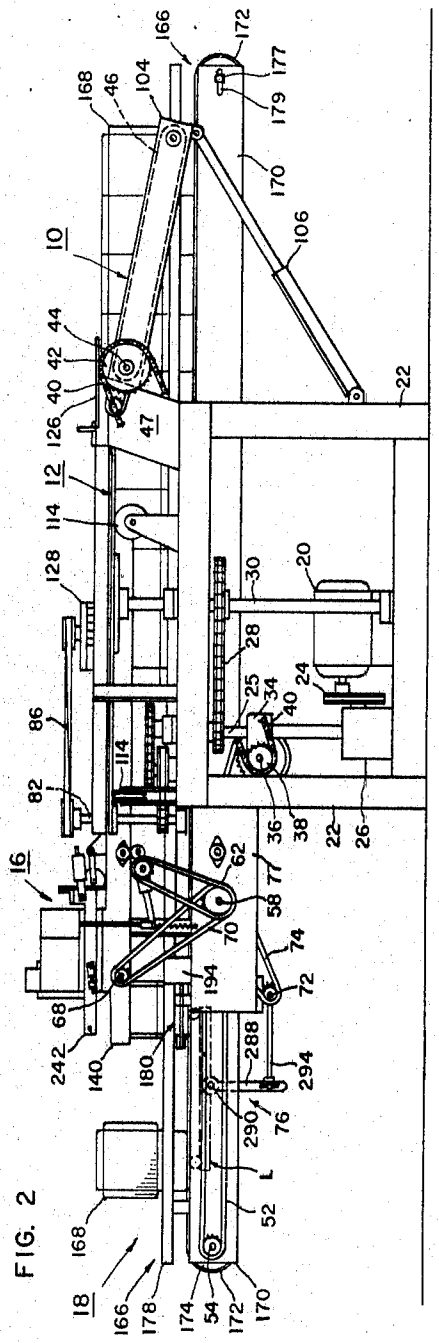

FIG. 2

INVENTOR.
THOMAS L. COOK

BY Gardner & Zimmerman

ATTORNEYS

Dec. 23, 1969 T. L. COOK 3,485,009

PACKAGING MACHINE

Filed April 4, 1968 5 Sheets-Sheet 2

FIG. 3

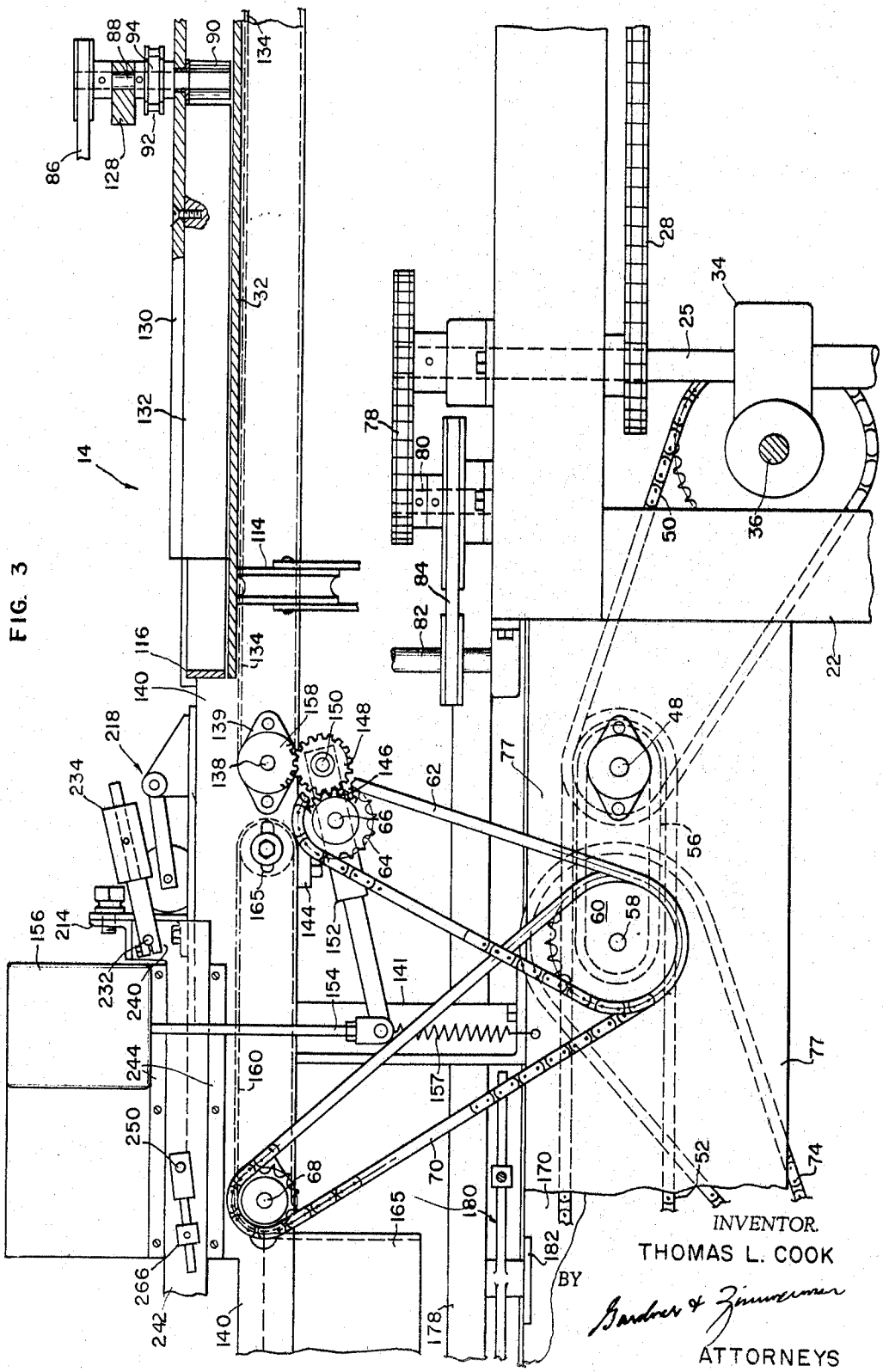

INVENTOR.
THOMAS L. COOK
BY
Gardner & Zimmerman
ATTORNEYS

Dec. 23, 1969 T. L. COOK 3,485,009

PACKAGING MACHINE

Filed April 4, 1968 5 Sheets-Sheet 3

FIG. 4

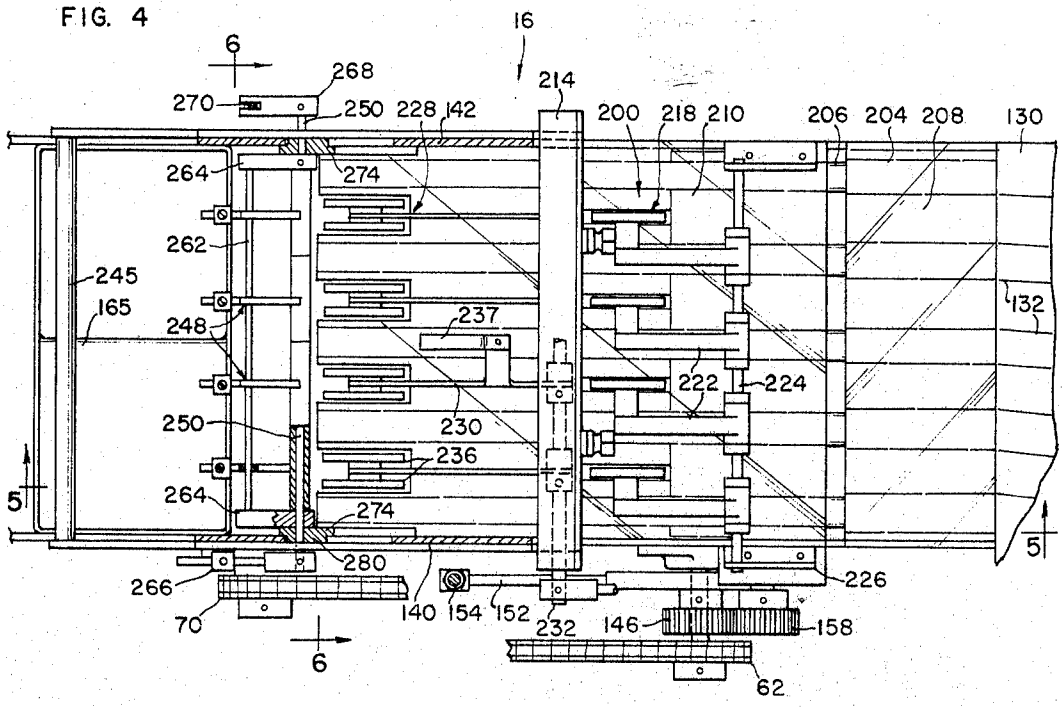

FIG. 5

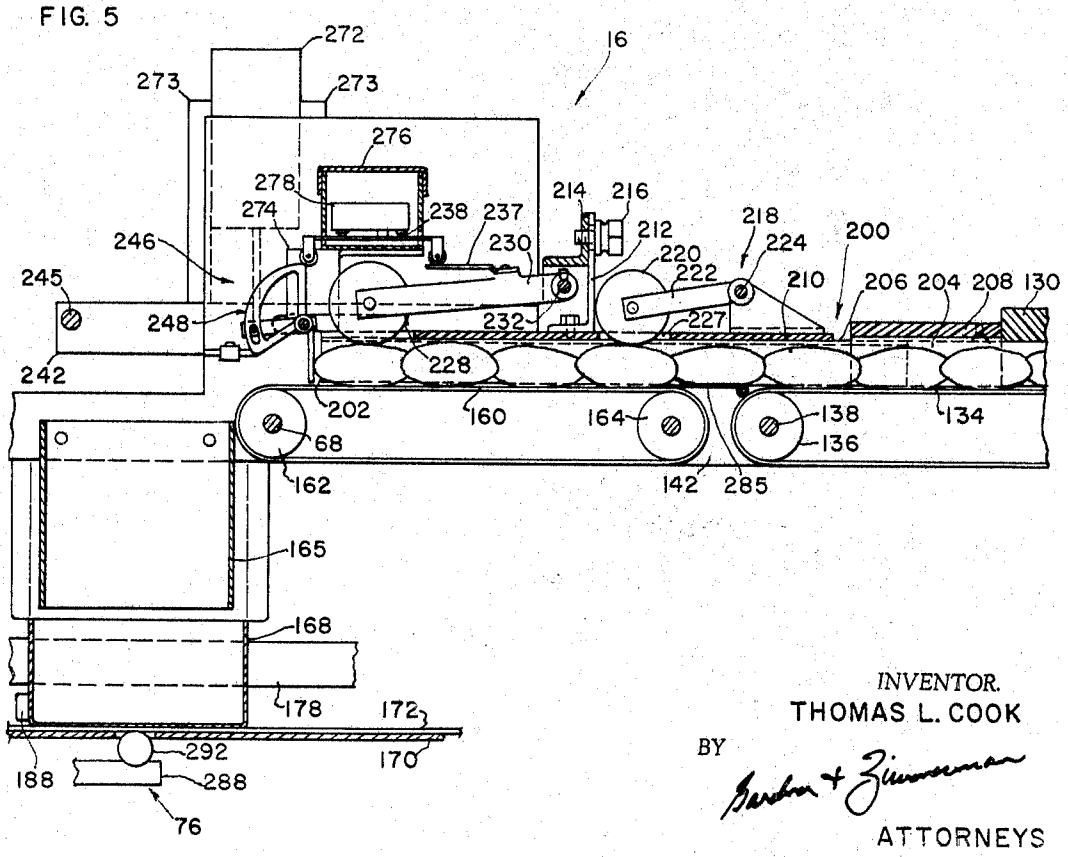

INVENTOR.
THOMAS L. COOK

BY Gardner & Zimmerman

ATTORNEYS

Dec. 23, 1969 T. L. COOK 3,485,009

PACKAGING MACHINE

Filed April 4, 1968 5 Sheets-Sheet 4

FIG. 7

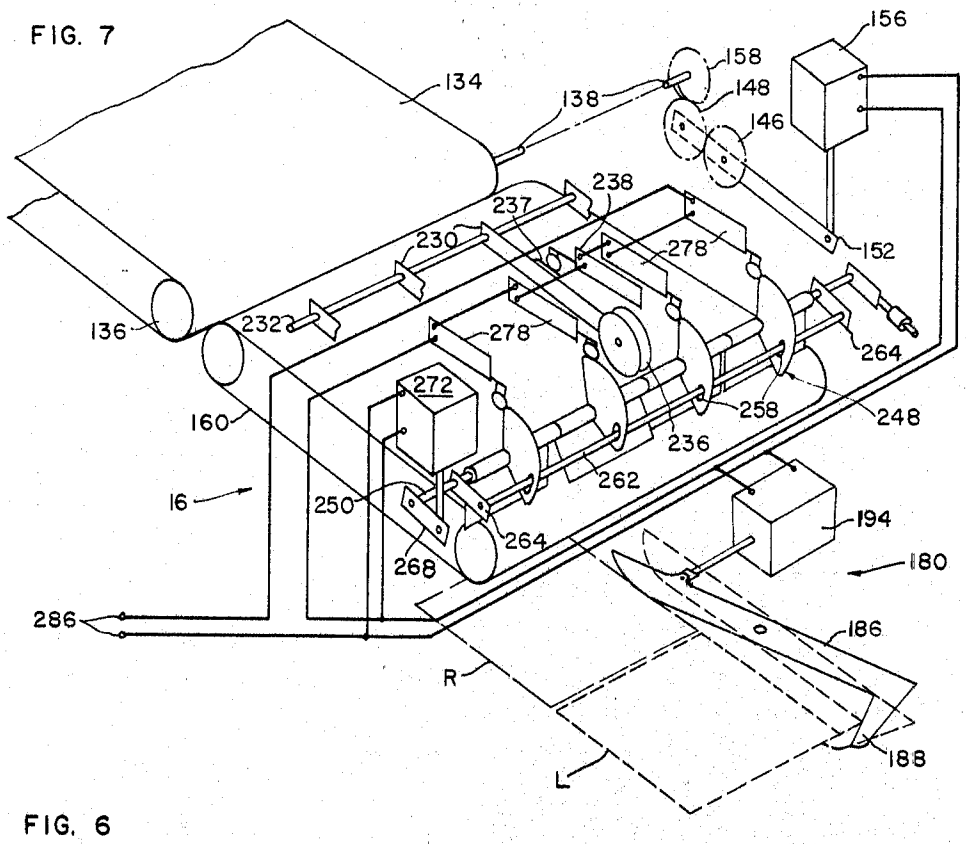

FIG. 6

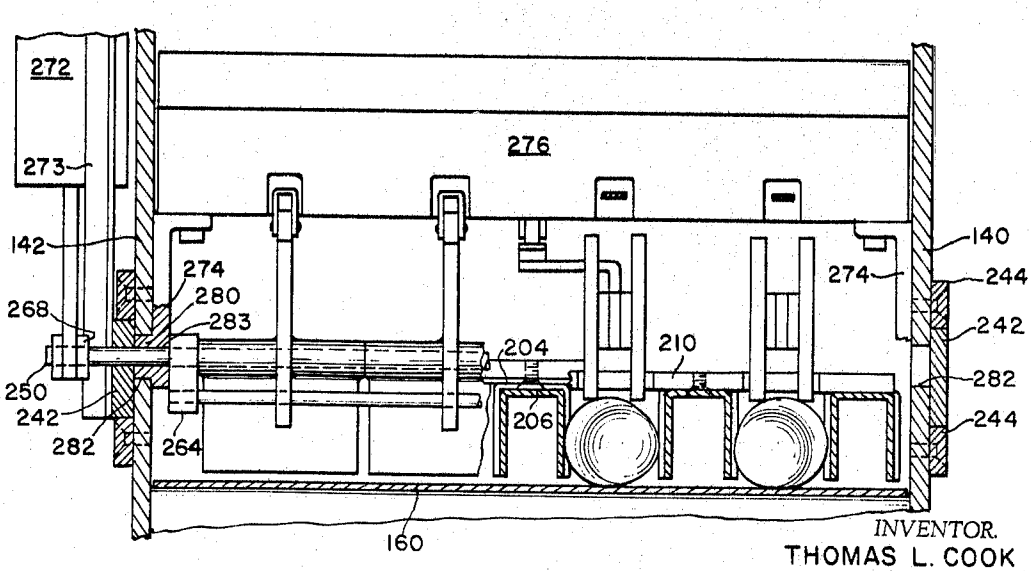

INVENTOR.
THOMAS L. COOK

BY Harbert & Zimmerman

ATTORNEYS

Dec. 23, 1969 T. L. COOK 3,485,009

PACKAGING MACHINE

Filed April 4, 1968 5 Sheets-Sheet 5

FIG. 9

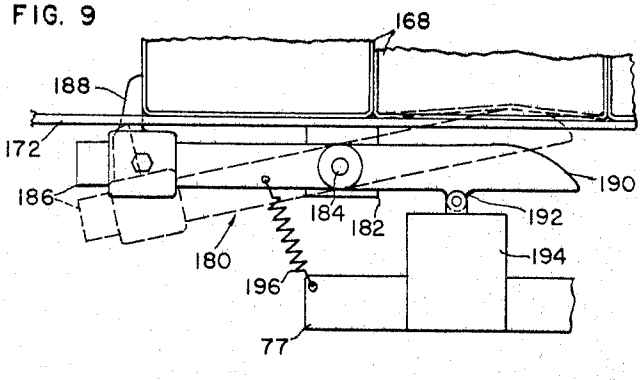

FIG. 8

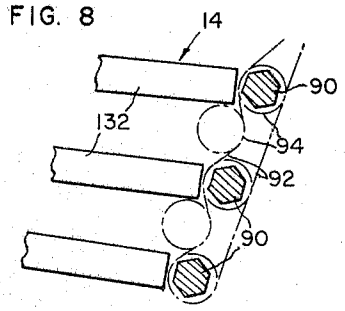

FIG. 10

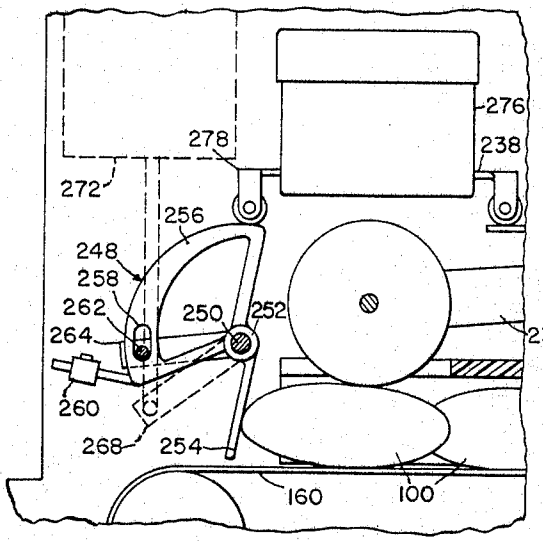

FIG. 11

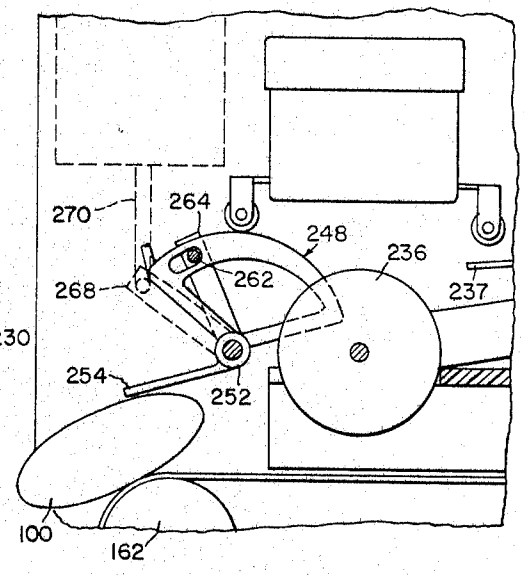

FIG. 12

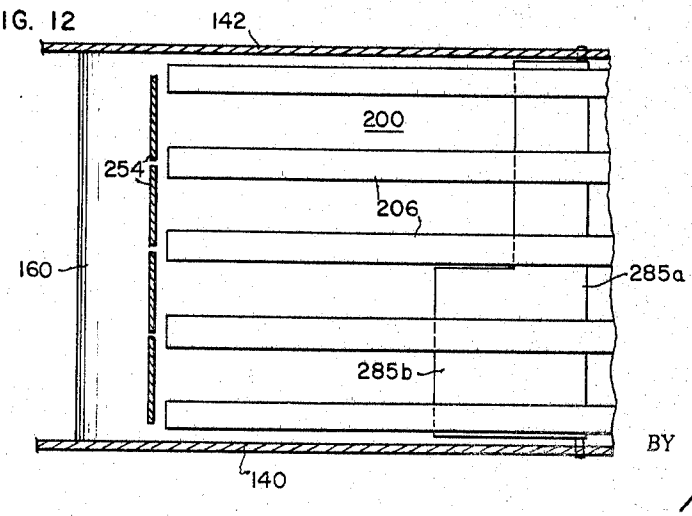

INVENTOR.
THOMAS L. COOK

BY Barker & Zimmerman

ATTORNEYS

United States Patent Office 3,485,009 Patented Dec. 23, 1969

3,485,009

PACKAGING MACHINE

Thomas L. Cook, 1320 Egbert Ave.,
San Francisco, Calif. 94124

Filed Apr. 4, 1968, Ser. No. 718,749
Int. Cl. B65b 23/14, 35/30, 57/14
U.S. Cl. 53—55 17 Claims

ABSTRACT OF THE DISCLOSURE

A filling apparatus for articles such as doughnuts in which a plurality of such articles are delivered to a continuously moving belt, a gate mechanism restraining the articles until a predetermined number of articles are on the belt, means for opening the gate and discharging the determined number of articles, and means for stopping delivery of articles to said belt during the discharging operation.

BACKGROUND OF THE INVENTION

There are numerous ways in which a plurality of articles may be deposited in a suitable container or carton, and in many instances, it is necessary that some predetermined number of such articles be provided in each package. Certain articles lend themselves quite readily to previously used machines, but where the article is a food product, such as doughnuts, additional problems are presented.

SUMMARY OF THE INVENTION

In general, the apparatus of the present invention provides an apparatus which is capable of high speed filling of passages with a predetermined number of doughnuts or other articles. Additionally, the doughnut count may be selectively varied so that a greater or lesser number of articles may be deposited in the package. Although the disclosed apparatus is adapted for random packaging, the same concepts as hereinafter set forth can be incorporated with some suitable head mechanism which is capable of stacking or otherwise orienting the product.

The construction is such that crumbs falling from the doughnuts or coatings on the doughnuts will not interfere with the continued operation of the machine. In more detail, the apparatus is adapted to sequentially deliver open top boxes or cartons to the bottom of a filling spout. Doughnuts are delivered to a continuously moving conveyor and maintained in a plurality of single line columns until a predetermined but variable number of doughnuts are on the conveyor. Thus, while a feed conveyor is halted, preventing further delivery of doughnuts to the continuously moving discharge conveyor, the latter deposits the entire number into the filling spout and thus into the subjacent box. When the operation is completed, the filled box is conveyed away, a new box is brought into filling relationship, and the feed conveyor reactivated to deliver the doughnuts onto the discharge conveyor.

BRIEF DESCRIPTION OF THE DRAWINGS

FIGURE 1 is a top plan view of a food packaging machine embodying the present invention.

FIGURE 2 is a side elevational view of FIGURE 1.

FIGURE 3 is an enlarged side elevational view of a portion of FIGURE 2.

FIGURE 4 is an enlarged top plan view of a portion of FIGURE 1.

FIGURE 5 is a longitudinal section taken on the line 5—5 of FIGURE 4.

FIGURE 6 is a cross-sectional view taken on the line 6—6 of FIGURE 4.

FIGURE 7 is a diagrammatic perspective view of a portion of the machine.

FIGURE 8 is an enlarged detailed view of agitators.

FIGURE 9 is an enlarged detailed view of the stop and release mechanism for cartons.

FIGURE 10 is an elevational view of the control mechanism on an enlarged scale.

FIGURE 11 is a view similar to FIGURE 10, but showing the parts in another position.

FIGURE 12 is a modification of a portion of the machine for controlling the number of articles of food packaged in one carton.

DESCRIPTION OF THE PREFERRED EMBODIMENTS

In broad terms, the apparatus of the present invention, as shown in the drawings, includes a product delivery conveyor **10**, a turntable **12** which receives the product from the conveyor, a plurality of guiding slots or channels **14** into which the product is delivered, a control head and discharge conveyor means **16**, and a carton conveyor **18** which is adapted to deliver empty cartons for receiving the counted number of articles or products and remove the filled cartons.

Before describing the nature of operation, some explanation will be given of the major drive mechanisms for the machine. The entire machine is driven by a single source of power comprising a motor **20** mounted on the base of a table **22**. The motor **20** through a pair of sprockets and a chain **24**, drives a vertical shaft **25** through a gear box **26**. Shaft **25** through a pair of sprockets and a chain **28** drives a vertical shaft **30** which supports and drives the turntable **12**. Shaft **30** is supported by a plurality of bearings mounted on table **22**.

Shaft **25** through a gear box **34** also drives a horizontally disposed shaft **36**. A sprocket **38** on shaft **36** through chain **40** drives a sprocket **42** on a horizontal shaft **44** located adjacent the rear end of turntable **12**. Shaft **44** drives a continuous slatted belt **46** which forms a part of the delivery conveyor **10**. Shaft **44** is rotatably supported by a pair of bearings **45** attached to extensions **47** of frame **22**.

As best shown in FIGURE 3, shaft **36** also drives a horizontal shaft **48** through a pair of sprockets and a chain **50**. Shaft **48** through a pair of sprockets and a chain **52** in turn drives a head drum shaft **54** shown in FIGURES 1 and 2.

Shaft **48** through a pair of sprockets and a chain **56** drives a head shaft **58**. A sprocket **60** secured on the end of shaft **58** through a chain **62** drives a sprocket **64** secured on the end of a shaft **66**. Shaft **58** also drives a shaft **68** through a pair of sprockets and a chain **70**. Shaft **58** additionally drives a shaft **72** through a pair of sprockets and a chain **74** (shown in FIGURE 2). Shaft **72** is utilized to drive a shaker device **76** which will be hereinafter more fully described. Shafts **48**, **58**, and **72** are rotatably supported by bearings mounted on a frame member **77** extending from main frame **22**.

As illustrated in FIGURES 1, 3 and 8, the shaft **25** through a pair of sprockets and a chain **78**, drives an idler shaft **80** which drives a vertical shaft **82** through a pair of sheaves and V belt **84**. Shaft **82** through a pair of sheaves and a belt **86** drives a stub shaft **88**, the latter driving a hexagonal agitator **90** whose function will be hereinafter described. A sinuous chain drive **92** drives a plurality of similar hexagonal agitators **90** through a corresponding plurality of sprockets **94**.

A food article or other product **100**, such as doughnuts, are delivered from a source **102** to the slatted belt **46** of the delivery conveyor **10** which is supported by a frame **104**, which in turn is pivotally supported on the horizontal shaft **44**. The free end of frame **104** is adjustably supported by an adjustable brace **106** from frame **22**, whereby the slope of the conveyor may be selectively varied. The

belt **46** moving in the direction of the arrows, delivers the doughnuts **100** to the turntable **12** in a random pattern.

The belt **46** meeting the turntable **12** at a tangent point leaves a pair of open corners **108** which are filled by a plurality of hexagonal conveyor shafts **110**. Shafts **110** are driven by a series of gears (not shown) from a chain drive **112** on shaft **44**. In this manner, all doughnuts on the belt will be properly deposited on the constantly rotating turntable.

As previously mentioned, the turntable **12** is rotatably supported by shaft **30** at its center, the table being further supported around its periphery by a plurality of rollers **114**. A circumferential barrier **116** is provided around the periphery of turntable **12** to retain the doughnuts on the table. A stationary barrier or deflector **118** overlying and extending generally radially of the turntable guides the doughnuts **100** toward the throats of the guide channels **14** which extend generally tangentially of the table. A yieldable gate **120** confines the doughnuts to the area directly in front of said channels until they pile up, creating sufficient pressure to open the gate **120** against the tension of a spring **122** thereby permitting the doughnuts to enter each of such channels in a single column formation.

A frame comprising a pair of normally related angles **124** support the barriers **118** and **120** and also support a hinged flat **126** which rakes off piled up doughnuts being delivered to the turntable from the conveyor **10**. The frame further supports an additional bridge **128** on which the previously described agitators **90** and their respective drives are mounted.

The frame **124** also partially supports the guiding means **14** which includes a cover plate **130** preferably formed of a clear transparent plastic, from which a plurality of divider strips **132** depend, as best shown in FIGURE 3. The strips **132**, as shown in FIGURE 8, are positioned directly forwardly, i.e., in the direction of product movement of each agitator **90**. The space between the strips **132** form the slots or channels **14** through which the doughnuts may pass in being discharged from the turntable. The agitators **90** are constantly rotating deflecting the doughnuts away from the ends of the strips and causing them to assume a position where they will freely enter the slots without danger of having one or more doughnuts forming a block or otherwise jamming across the channel openings. An intermittently driven feed conveyor belt **134** is positioned just under the turntables **12** at its approximate periphery and subjacent the channels **14**, as best illustrated in FIGURES 1 and 3. Belt **134** is driven by a head pulley **136** (FIGURE 5) mounted on a shaft **138** which is journalled in a pair of bearings **139** on side frame members **140** and **142**. Frame members **140** and **142** are supported from main frame **22** and a brace **14**. A rear pulley, not shown, supports the other end of the belt.

Belt **134** is arranged for intermittent motion, and the drive mechanism for the belt is best seen in FIGURE 3. Previously described shaft **66** is driven at a constant speed and is journalled in a pair of bearings **144** mounted on frame members **140** and **142**. A pinion **146** is secured on the end of shaft **66** and meshes with a second pinion **148** which rotates freely on a stub shaft **150** which is carried at one end of a fulcrumed lever **152**. The opposite end of lever **152** is pivotally connected to a reach rod **154** of a solenoid **156**. A tension spring **157** urges the rod downwardly and the lever **152** in a counterclockwise direction forcing the pinion **148** into engagement with a pinion **158** rigidly secured on the end of shaft **138**. Thus it will be seen that belt **134** will be continuously driven so long as pinions **148** and **158** are in engagement, but will remain stationary upon solenoid actuation which raises the rod **154**, moving the lever in a clockwise direction and disengaging the pinions **148** and **158**.

A product discharge belt **160** in line with belt **134**, is continuously driven by a head pulley **162** rigidly secured on shaft **68**. A tail pulley **164** supports the free end of belt **160** and is provided with a take-up in the form of slots **165** in side frames **140** and **142** (FIGURE 3). A chute **165** is positioned adjacent the head pulley **162** of belt **160** to funnel the doughnuts **100** into a carton **168** which is delivered subjacent the lower end of the funnel in a manner now to be described.

A conveyor system **166** for continuous supplying of open top cartons **168** is positioned under the belts **134** and **160**. The conveyor system is supported by a channel frame member **170** attached to the main frame **22**. A carton conveyor belt **172** is driven by a head pulley **174** secured on the shaft **54** and mounted within the channel frame **170**. A tail pulley **176** is mounted on a shaft **177** in the opposite end of channel frame **170** and is provided with a take-up in the form of slots **179** in the frame. A pair of rails **178** are supported by the frame **170** adjacent opposite sides of the belt **172** to provide a means to retain the cartons **168** on the belt.

A stop and release mechanism **180** is provided for the cartons **168** and is best shown in FIGURE 9 of the drawings. A bracket **182** rigidly attached to channel frame **170** supports a fulcrum pin **184**. A fulcrum lever **186** is pivotally mounted on pin **184** and is provided with a stop dog **188** adjustably positioned adjacent one end thereof, the other end having an arcuate upper edge **190** adapted to engage the bottom surface of a carton. Midway between fulcrum **184** and end **190**, lever **186** is provided with a depending projection **192** adapted to be connected with the core of a solenoid **194**, mounted on the frame member **77**. The stop and release mechanism **180** is shown in its activated position with the solenoid in its energized position in the solid line representation of FIGURE 9. A tension spring **196** extending between frame **77** and a forward portion of lever **186** normally urges the arcuate edge **190** into engagement with cartons **168** frictionally arresting their forward movement, as shown in dotted lines. When solenoid **194** is actuated it will assume the full line position releasing a carton held frictionally by the lever end **190** to a position where the carton **168** will be held in the loading position by the stop **188** during the filling cycle.

Guiding slots **14** guide doughnuts **100** traveling on feed conveyors **134** to a plurality of aligned slots or channels generally indicated by the numeral **200** (FIGURE 4) which extend from the slots **14** to their termination at a point **202** (FIGURE 5) just short of the end of the discharge belt **160**. The slots **200** are formed by a plurality of inverted telescoping elements comprising a fixed section **204** and a movable section **206** most clearly shown in FIGURES 4, 5 and 6. Sections **204** are supported by a bridge **208** carried by the frame members **140** and **142**, such bridge being preferably formed of a clear plastic.

Sections **206** are connected to and depend from a cover plate **210** which is likewise preferably formed of a clear plastic. Cover plate **210** is supported by a pair of hangers **212** extending to a bridge angle **214** where the hangers are adjustably secured in place by flanged cap screws **216**.

Means **218** are provided overlying belt **160** and adapted to engage the doughnuts **100** to provide additional friction between the doughnuts and belt **160**. Such means include plurality pressure rollers **220** free to rotate on their axes, and carried at one end of arms **222**. The other end of each arm is free to pivot on a shaft **224**, supported by brackets **226** which are mounted on cover plate **210**. Rollers **220** project through windows **227** in cover plate **210** and extend into the respective channels **200**.

A second set of roller means **228** overlying belt **160** are provided to form a circuit breaker for controlling the operation of the apparatus. Each roller is carried at one end of an arm **230**, being provided for each slot **200**. Arms **230** are rigidly fixed at their other ends to a transverse shaft **232**, the latter being provided with a counterweight **234** (FIGURE 3). The free ends of arms **230** are

provided with a pair of rollers **236** free to turn on their axis. One of the arms **230** is provided with a leaf spring **237** to engage the actuating roller of a microswitch **238**. Shaft **232** is pivotally journalled in upturned ends **240** of a pair of slides **242** (FIGURES 3 and 5), such ends **240** also support the previously described bridge angle member **214**. Each slide **242** is held in a slideable position by a pair of guides **244** attached to frame members **140** and **142**. Secured to slides **242** is a handle, in the form of a rod **245** and provides a means to adjustably position the slides **242**.

A gate mechanism, generally indicated by numeral **246**, controls the selected number of doughnuts which are delivered to the cartons **168**. One individual gate **248** is provided for each slot or channel **200** and is supported by a shaft **250**, being free to oscillate thereon the shaft **250** being journalled in slides **242**.

Each gate **248**, best shown in FIGURES 10 and 11, comprises a hub section **252** carried on shaft **250** provided with a depending gate portion **254** and an arcuate switch engaging portion **256**. The arcuate portion **256** is provided with a slot **258**. The lower end of arcuate portion **256** is also provided with an adjustable counterweight **260**. A rod **262** extends through all of the slots **258** and is rigidly connected at each end to a pair of arms **264** which are rigidly secured on shaft **250**. One end of shaft **250** is provided with an adjustable counter-weight **266** and the opposite end of the shaft is provided with a lever **268**. The free end of lever **268** is connected to a rod **270** from a solenoid **272** supported by a pair of angles **273** secured to slides **242**.

A pair of brackets **274** support a housing **276** containing a plurality of microswitches **278** adapted to be activated individually by the arcuate portions **256** of gates **248**, each of the gates having an associated microswitch. Microswitch **238** is also mounted in housing **276**. Brackets **274** are positioned adjacent the inside face of side frames **140** and **142**, and are provided with elongated bosses **280** (FIGURES 4 and 6), projecting into slots **282** in side frames **140** and **142**. Brackets **274** are provided with an aperture **283** in which shaft **250** is journalled.

In the preceding mechanism the tripping of the gates requires the proper amount of pressure from the frictional engagement of the doughnuts on belt **160**. Another means to trip the gates, would be to provide a microswitch for each position a doughnut was to occupy. When the required number of doughnuts were in position all the microswitches would be closed to complete the circuit to trip the gates.

It will be seen from the foregoing that all the functional parts of the gating and numerical control of the doughnuts delivered to the cartons are supported by the slides **242**, and the effective length of the belt **160** accommodating the required number of doughnuts may be varied by pushing or pulling the rod handle **245**. The numerical count of doughnuts is also controlled by a bridging member **285** (FIGURE 5) positioned between belt **134** and belt **160**. While doughnuts are being ejected from the belt **160** when gates **254** are raised, the movement of belt **134** is interrupted. Therefore, doughnuts **100** in a "dead" position on the bridge **285** will remain in such halted position until belt **134** is reactivated, wherein they will be pushed onto belt **160** by the doughnuts following on belts **134**. The number of doughnuts delivered by the belt **160** in each channel **200** may be altered by altering the bridge **285** such as shown in FIGURE 12 wherein the bridge **285*a*** is provided with an enlarged area **285*b*** overlying conveyor **160** which will retain two doughnuts. In this manner, the design of the bridge may effectively control the delivery of a desired quantity since a greater or lesser number of doughnuts may be introduced onto the belt **160** in the respective channels **200**. It should be understood that although belt **160** is continuously driven, when the gates **254** are in their closed position, the belt, preferably Teflon coated, will merely slide under the doughnuts.

The functions and operation of the mechanism controlling the gating and numerical control will be best understood by referring to FIGURE 7. When a required number of doughnuts (in the preferred form illustrated in FIGURE 5 the required amount would be four. Inasmuch as there are four slots or rows the total amount would be sixteen) are accumulated, in one slot on belt **160**, a sufficient pressure is exerted against the gate **254** causing it to oscillate in a clockwise direction against the pressure of counterweight **260** actuating its associated microswitch causing it to "make" or close contacts. Normally all microswitches **278** and **238** are open or broken contacts. The above condition of the gate and associated microswitch is illustrated in FIGURE 10 and the second gate from the left in FIGURE 7. Further oscillation of the gate **248** is arrested by the end of the slot engaging the rod **262**. As each of the rows of doughnuts become filled with four doughnuts each gate will be oscillated in the above manner and its associated microswitch will be closed. When all the microswitches **278** and the single microswitch **238** are closed it will complete the circuit from the terminals **286**. Completion of the circuit will energize the three solenoids **156**, **194**, and **272**. Solenoid **194** will actuate arm **186** to allow a carton to move from a ready position indicated by R to a loading position shown in a dotted line at L, corresponding to the position shown in FIGURE 5 and the solid line showing of FIGURE 9. At the same instant, the solenoid **156** will rock arm **152** disengaging the pinions **148** and **158**, disconnecting the drive to belt **134** and halting the delivery of doughnuts to belt **160**. Simultaneously, solenoid **272** will rock lever **268**, levers **264** and **250** in a counterclockwise direction as view in FIGURE 7. The rod **262** attached to the end of arms **264** will engage the upper end of slots **258**, continued oscillation of arms **264** will rock the gates **248** into the full open position shown in FIGURE 11, wherein the gate **254** permits movement of the doughnuts **100** through chute **165** to the carton **168**. After the last doughnut in each slot has passed the rollers **236**, it will allow the arms **230** to drop causing the circuit to be broken to the solenoids allowing them to return to their normal position.

While the cartons **168** are being filled, also at a position L (FIGURE 2), they are subjected to a vibration caused by the shaker mechanism **76**. This mechanism comprises a T-shaped member **288** fulcrumed on a shaft **290** secured in channel frame **170**. The cross bar of the T is provided with cylindrical hammers **292** adapted to rap the carton conveyor belt **172** just under the cartons **168**. The depending bar of the T **288** is provided with a slot to accept a rod connection **294**. The opposite end of rod **294** is connected to an eccentric pin **296** on the end of shaft **72**. Rotation of shaft **72** will thus cause oscillation of the T member resulting in a sharp rapping of the cartons **168** to "settle out" any doughnuts that may be piled up in the carton.

I claim:

1. Apparatus for depositing articles in a container, comprising an article discharge conveyor, means for delivering a plurality of articles to said conveyor in at least one discrete now, gate means normally blocking the discharge end of said conveyor, means opening said gate means when a predetermined number of said articles are in said row whereby said articles may be discharged from said discharge conveyor and into a container, and means operative upon opening of said gate means halting said article delivering means.

2. Apparatus as set forth in claim **1** in which said discharge conveyor is continuously moving irrespective of the position of said gate means.

3. Apparatus as set forth in claim **1** in which a plurality of article guide channels are provided overlying

and in alignment with said discharge conveyor whereby a plurality of discrete rows of articles are formed on said conveyor.

4. Apparatus as set forth in claim 1 in which said article delivering means includes a feed conveyor in alignment with said discharge conveyor, means driving said feed conveyor, and said last named being disengaged upon opening of said gate means.

5. Apparatus as set forth in claim 4 including means defining an article guide channel overlying and in alignment with said feed conveyor for maintaining the articles in a discrete row on said feed conveyor.

6. Apparatus as set forth in claim 4 including a stationary flat member interposed between and in alignment with the discharge end of said feed conveyor and the receiving end of said discharge conveyor and adapted to support each article as the articles are transferred from the feed conveyor to the discharge conveyor.

7. Apparatus as set forth in claim 1 including a container delivery conveyor underlying said discharge conveyor, stop means positioning a container subjacent the discharge end of said discharge conveyor, and means operative upon closing of said gate means releasing said stop means.

8. Apparatus as set forth in claim 7 including second stop means for restraining movement of a penultimate carton on said container conveyor upon release of said first mentioned stop means.

9. Apparatus as set forth in claim 8 in which said stop means include a lever disposed subjacent said container delivery conveyor and in alignment therewith, said lever having an intermediate pivot for pivotal movement about an axis transverse to the length thereof, one end of said lever having a container intercepting stop element thereon for stopping and positioning a container in one position of the lever, the other end of the lever having a container engaging portion adapted to raise a container from the container conveyor in another position of the lever.

10. Apparatus as set forth in claim 1 including a turntable on which articles may be indiscriminately deposited, means for rotating said turntable, tangentially extending article guide means in alignment with said discharge conveyor, and means overlying said turntable for urging articles thereon towards and through said guide means.

11. Apparatus for counting and packaging articles comprising a feed conveyor, drive means for said feed conveyor, a discharge conveyor in alignment with and adapted to receive articles from said feed conveyor, drive means for said discharge conveyor, gate means adjacent the discharge end of said discharge conveyor normally intercepting articles deposited thereon, means actuating said gate means to open the same when a predetermined number of articles are on said discharge conveyor, means operatively connected with said gate means for disengaging the drive means for said feed conveyor upon actuation of said gate means.

12. Apparatus as set forth in claim 11 including a horizontally disposed turntable, means for rotating said turntable, article guide means overlying said turntable directing articles thereon towards and onto said feed conveyor.

13. Apparatus as set forth in claim 11 including elements overlying said conveyors defining a plurality of longitudinally extending guide channels to provide for aligned discrete rows of articles along the conveyors.

14. Apparatus as set forth in claim 13 including means for adjustably controlling the effective length of each channel overlying said discharge conveyor whereby a predetermined number of articles may be supported on said discharge conveyor in each channel thereby.

15. Apparatus as set forth in claim 13 in which a gate is provided for each channel and in which said drive disengaging means is actuated only upon actuation of all of said gates.

16. Apparatus as set forth in claim 11 including a microswitch operable upon gate means actuation for disengaging said feed conveyor drive means.

17. Apparatus as set forth in claim 11 including a container delivery conveyor underlying said feed container, a pair of longitudinally spaced container intercepting devices adjacent said container conveyor, means for actuating one of said drives for positioning a container adjacent the discharge end of said discharge conveyor when said gate means are actuated and actuating the other of said drives in the normal position of said gate means.

References Cited

UNITED STATES PATENTS

2,968,899	1/1961	Holmes	53—61 X
3,018,592	1/1962	Belk et al.	53—61

TRAVIS S. McGEHEE, Primary Examiner

U.S. Cl. X.R.

53—61