May 21, 1929. G. B. PICKOP 1,713,551

PERCUSSION TOOL

Filed July 24, 1925

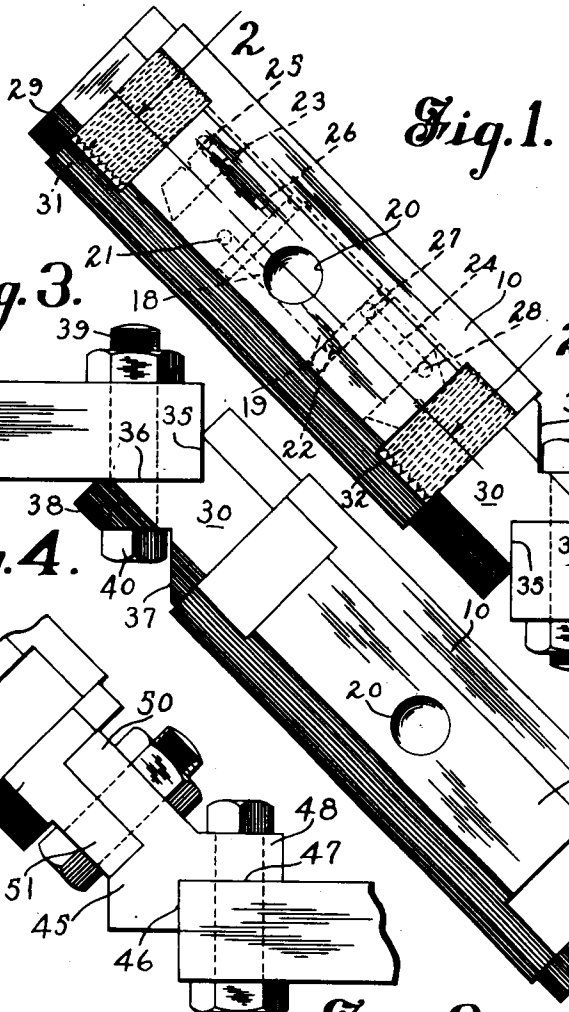

Fig. 1.

Fig. 3.

Fig. 4.

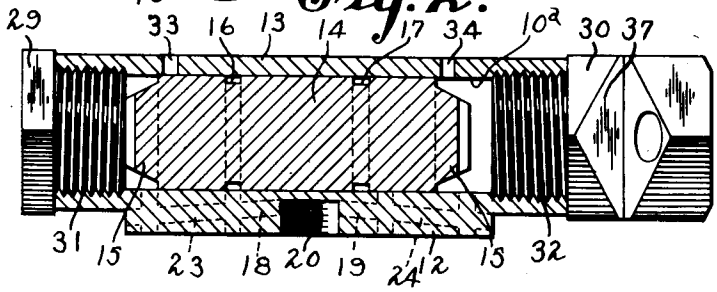

Fig. 2.

Inventor

George B. Pickop

By Henry E. Rockwell

Attorney

Patented May 21, 1929. 1,713,551

UNITED STATES PATENT OFFICE.

GEORGE B. PICKOP, OF NEW HAVEN, CONNECTICUT, ASSIGNOR TO MALLEABLE IRON FITTINGS COMPANY, OF BRANFORD, CONNECTICUT.

PERCUSSION TOOL.

Application filed July 24, 1925. Serial No. 45,916.

This invention relates to percussion tools, and more particularly to vibrators of the reciprocating piston type used in various relations in foundry work, and particularly in the moulding art for facilitating the removal of the pattern. Such vibrators are usually actuated by compressed air and comprise a hollow body portion having a cylindrical bore closed by end heads. Within the bore is mounted a piston which is rapidly reciprocated when the vibrator is placed in communication with the source of power. A spring is usually placed in one end of the cylinder to act against the piston in such a manner as normally to hold the latter against one end of the cylinder so that after use it will always come to rest in a starting position. If the spring is omitted and the vibrator is used in a horizontal position, as is always the case when attached to pattern boards, the piston may come to rest in a central or dead center position so that it will not start when the air is turned on, as will be more fully explained hereinafter.

It is well known that these springs are often a source of trouble, due to the breakage thereof, and a great deal of time is required to disassemble the vibrator and insert a new spring. As this spring does not play any part in the useful work performed by the tool, but only functions to maintain the piston in a starting position at one end of the cylinder, it will be seen that if some other means is devised to control the position of the piston when it comes to rest, it may be dispensed with without loss of efficiency, and in fact, with a gain in efficiency due to the fact that the vibrator when moving in one direction is required to work against the spring.

One object of my invention, therefore, is to provide an efficiently operating springless vibrator, wherein the piston will always, when at rest, lie in a starting position.

A further object of my invention is the provision of a vibrator having means by which it may be attached to an object to be vibrated, such that the vibrator shall be maintained at an oblique angle to the horizontal so that the piston will be maintained by gravity at one end of the cylinder, in a starting position.

A still further object is the provision of a springless vibrator, wherein the weight of the piston is employed to maintain the latter in a starting position.

Still another object of the invention is the provision of an end member for vibrators, having means for attaching the latter to an object to be vibrated, whereby the axis of the vibrator will stand at an angle to the horizontal.

To these and other ends the invention consists in the novel features and combinations of parts to be hereinafter described and claimed.

In the accompanying drawings:

Fig. 1 is a side elevational view of a vibrator embodying my improvements;

Fig. 2 is a sectional view on line 2—2 of Fig. 1;

Fig. 3 is a view similar to Fig. 1, showing the vibrator in a downwardly inclined position, and

Fig. 4 is a fragmentary view similar to Fig. 1, showing a modified form of my invention by which the ordinary vibrator can be attached so as to be disposed at an angle to the horizontal and used without a spring.

The preferred embodiment of my invention which I have selected to illustrate and described in the accompanying drawings, is a compressed air vibrator, constructed in a manner similar to the one shown in my prior Patent No. 1,336,921 of April 13, 1920, although it will be understood that the present improvements are not limited to the particular device shown, but may be applied to other vibrators of this general type. In Fig. 1 of the drawing I have shown a vibrator comprising a casing 10, the vibrator being secured to an object to be vibrated, such as a pattern board 11.

As illustrated, the vibrator body is provided with an interior cylindrical bore 10^a, eccentric to the exterior surface thereof, so that the wall 12 is of greater thickness than the wall 13, in order that the air communications may be conveniently provided in the former.

Within the bore 10^a is loosely mounted a piston 14, generally cylindrical in shape, but provided with reduced ends 15 so as to prevent the ends of the cylinder from being closed off, and also provided with two annular peripheral channels 16 and 17 to act as valves to control the admission of compressed air to the ends of the cylinder.

In the wall 12 are provided two ducts 18 and 19, which communicate with the inlet port 20 and which have at their outer ends ports 21 and 22 extending inwardly through the wall 12 to communicate with the cylindrical bore 10^a. Two other ducts 23 and 24 are likewise formed in the wall 12, and have at their respective ends ports 25, 26, 27 and 28, all of which communicate with the cylinder bore 10^a, the two ports 26 and 27 being substantially in line transversely of the vibrator body with the ports 21 and 22, respectively. It will be apparent that when the piston is at the left hand end of the cylinder, as shown in Fig. 2, the annular channel 16 will provide communication between the ports 21 and 26, so that compressed air entering through the inlet opening 20 will pass into the extreme left end of the cylinder, through the port 25 and cause the vibrator to be projected against the opposite end of the cylinder. Likewise, when the piston is at the right hand end of the cylinder, the annular channel 17 will afford communication between the ducts 22 and 27, and conduct the compressed air to this end of the cylinder to move the piston to the left. It will be apparent, however, that if the vibrator should come to rest at some point between its extreme positions, the channels 16 and 17 would not register with the respective ports and the vibrator would not start when the air was turned on.

The ends of the cylinder are closed by the end heads 29 and 30, which may be formed in any desired way. As shown, these heads are provided with exteriorly threaded bodies 31 and 32 to be screwed into the threaded ends of the cylinder. The latter is provided with exhaust ports 33 and 34 to permit the exhaust of the air when the piston is moved to the opposite end of the cylinder.

In order to obviate the necessity of providing a spring to maintain the piston at one end or the other of its stroke, and to make use of the force of gravity, or the weight of the piston itself to accomplish this function, I so construct the vibrator at the attaching end thereof that it will always be secured to the object to be vibrated, so that the axis of the cylinder will be inclined at an angle to the horizontal. In this manner the weight of the piston will be sufficient to cause it to slide downwardly after the compressed air has been shut off so as to rest against the lowermost head and thus be in its starting position when the air is again turned on.

As shown in Fig. 1, this is accomplished by cutting in the end head 30, a V-shaped notch having opposed sides 35 and 36, designed to lie flatly against the edges of the pattern board and so disposed that these surfaces stand at an oblique angle to the axis of the vibrator, the vertex of the V being substantially in line with this axis. A further notch 37 may be cut in the head so as to leave a lug 38 perforated to receive a bolt 39 by which the vibrator may be secured in place. The head 40 of the bolt will be held from turning by contacting with the side of the notch 37.

It will be obvious that when the vibrator casing is attached to a pattern board or other object by means of the bolt 39, it will always stand in an inclined position relatively to the horizontal so that the piston will always come to rest at the lower end of the cylinder and will, therefore, always lie in a starting position. The angle of inclination may be varied as desired, and this may obviously be done by varying the inclination of the sides 35 and 36 relatively to the axis of the vibrator.

Moreover, it will be found that when the vibrator is set at an oblique angle to the pattern board or other object to be vibrated, its work will be done more efficiently than when set in a horizontal position in the plane of this board or in a vertical position, for when set at an inclined position, as shown in the accompanying drawings, the impulses imparted to the pattern board by the vibrator have both vertical and horizontal components and the mould is enlarged and the pattern freed in both vertical and horizontal directions. Also, the mould will more truly conform to the exact shape of the pattern and hence the castings will likewise be more nearly exact replicas of the pattern when the vibrator is used in this way, for the reason that the components of the impulses will not be sufficiently great to distort the mould to a sufficient extent to appreciably enlarge it, as is sometimes the case when the vibrator is set in the plane of the pattern board. In practice, I have found that a vibrator positioned at an angle to the horizontal is 20 to 25% more effective, so that the same work may be done by a smaller and less expensive vibrator embodying my invention.

In Fig. 3 of the drawings I have shown the vibrator body attached in a downwardly inclined position to the pattern board, the construction of the vibrator itself being exactly the same as that shown in Fig. 1.

In Fig. 4 of the drawings I have shown an adapter designed for use with the ordinary type of vibrator, so that it may be disposed at an angle to the work and used without a spring. This adapter consists of a member 45 provided with a V-shaped notch between the surfaces 46 and 47, the latter being one side of a lug 48 perforated to receive the bolt 49. At the other end of the body is provided a lug 50 designed to lie flatwise against and be bolted to the usual lug 51 with which tools of this character are commonly provided. The lug 51 is so formed that the vibrator is usually mounted in the same plane as the pattern board, or in a horizontal position. By using my adapter, however, it will be seen that the vibrator is mounted at an inclined position, thus having all the advantages of the

structure shown in Figs. 1 to 3, due to the fact that the lug 48 and the surfaces 46 and 47 are inclined relatively to the lugs 50 and 51 which parallel the axis of the vibrator.

It will be apparent, therefore, that my improved vibrator may be provided with the head shown in Fig. 1, especially designed for attachment at an angle to the pattern board, or may be provided with the head 52 of the usual form, and an adapter 45 supplied with it so that it may be used either with or without the adapter, according to the desires of the user. The lug 50 may obviously, instead of lying flatwise against a lug 51, as shown in Fig. 4 of the drawings, be inserted in a slot in the vibrator head in some instances where these devices are formed with such a slot, for the purpose of attaching them to a pattern board or the like.

While I have shown and described some preferred forms of my invention, it will be understood that it is not limited to all the details shown but is capable of modfication and variation within the spirit of the invention and within the scope of the appended claims.

What I claim is:

1. A springless vibrator comprising a casing and a piston mounted for free reciprocation therein in both directions, and means for securing said casing to an object to be vibrated so that the axis of the casing shall be disposed only in an inclined position relatively to the horizontal, the angle of inclination being such that the piston will be maintained in a starting position by gravity when the vibrator is idle.

2. A springless vibrator comprising a casing and a piston mounted for free reciprocation therein in both directions, and means for securing said casing to an object to be vibrated so that the axis of the casing shall be disposed only in an inclined position relatively to the horizontal, the angle of inclination being such that the piston will be maintained in a starting position by gravity when the vibrator is idle, said means comprising an attaching lug on said casing, said lug being disposed at an oblique angle to the axis of the vibrator casing.

3. A springless vibrator comprising a casing and a piston mounted for free reciprocation therein in both directions, and means for securing said casing to an object to be vibrated so that the axis of the casing shall be disposed only in an inclined position relatively to the horizontal, the angle of inclination being such that the piston will be maintained in a starting position by gravity when the vibrator is idle, said means comprising a head member at one end of said casing, said head member being provided with an attaching lug, said lug being disposed at an oblique angle to the axis of the vibrator casing.

4. A springless vibrator comprising a casing and a piston mounted for free reciprocation therein in both directions, and means for securing said casing to an object to be vibrated so that the axis of the casing shall be disposed only in an inclined position relatively to the horizontal, the angle of inclination being such that the piston will be maintained in a starting position by gravity when the vibrator is idle, said means comprising a head member at one end of the casing, said member having a V-shaped notch cut therein, the sides of said notch being disposed at an oblique angle to the axis of the vibrator.

In witness whereof, I have hereunto set my hand this 21st day of July, 1925.

GEORGE B. PICKOP.