Dec. 18, 1934. T. H. ANGLIM 1,984,956

APPARATUS FOR PASTEURIZING MILK

Filed Oct. 21, 1930 2 Sheets-Sheet 1

Fig. 1.

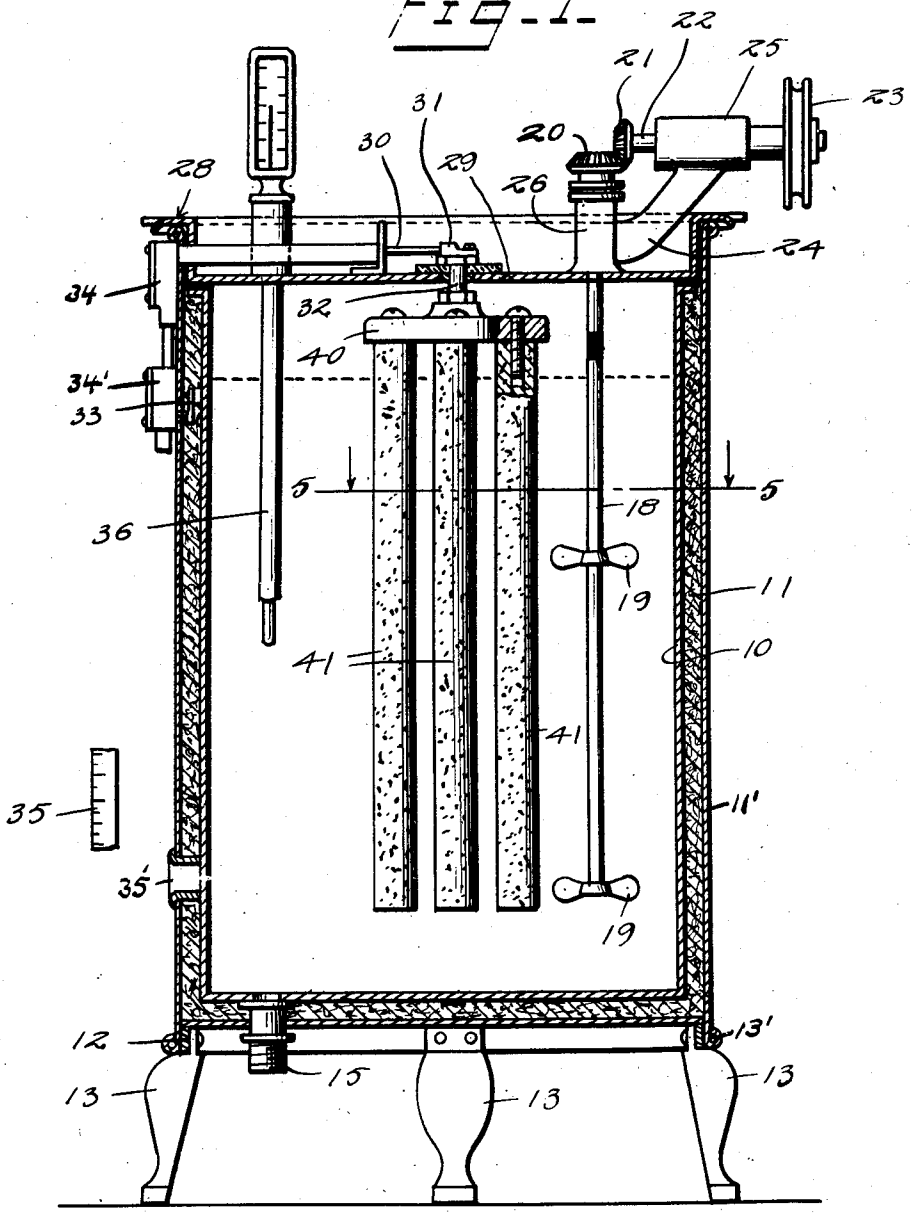

Inventor

T. H. Anglim

By Adrian Sizer

his Attorney

Dec. 18, 1934. T. H. ANGLIM 1,984,956

APPARATUS FOR PASTEURIZING MILK

Filed Oct. 21, 1930 2 Sheets-Sheet 2

Fig. 2.

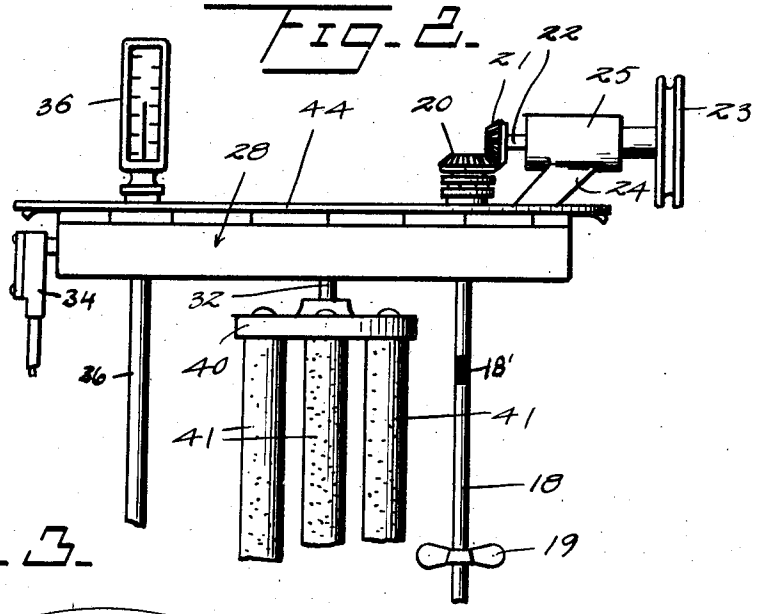

Fig. 3.

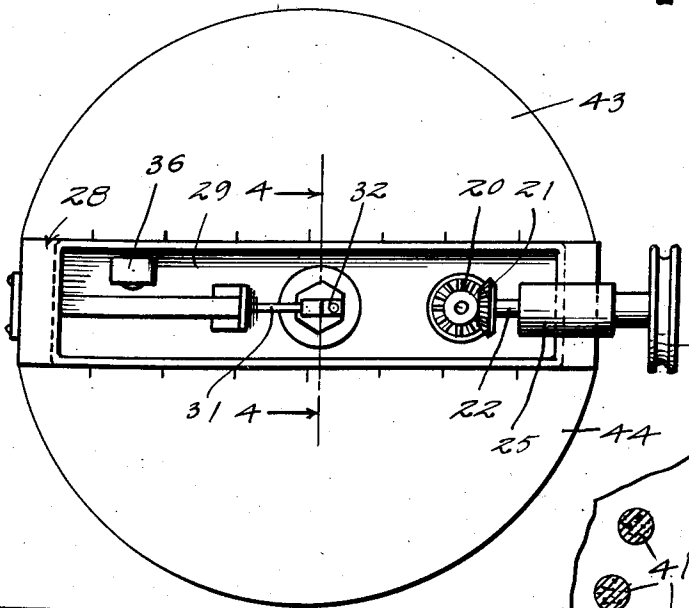

Fig. 5.

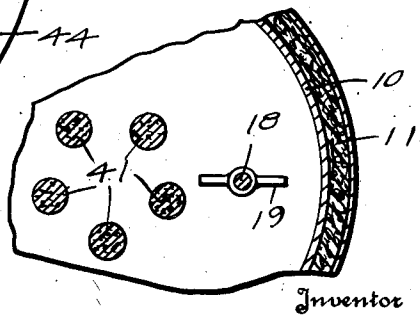

Fig. 4.

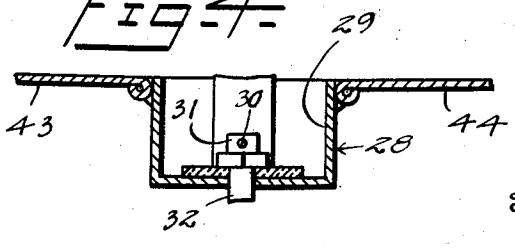

Inventor

T. H. Anglim

By Adrian Lyon

his Attorney

Patented Dec. 18, 1934 1,984,956

UNITED STATES PATENT OFFICE

1,984,956

APPARATUS FOR PASTEURIZING MILK

Thomas H. Anglim, Dunkirk, N. Y.

Application October 21, 1930, Serial No. 490,319

5 Claims. (Cl. 219—40)

The object of this invention is to provide improved means for the pasteurization of milk—the apparatus being suitable for use under other conditions—and the main container employed having a wall and bottom insulated from a supporting base, said wall being preferably covered with insulating material, and the container constituting an outer metallic electrode for cooperation with an inner electrode of graphite or the like, mounted and formed as indicated below.

A further object is to employ an inner electrode which shall be equally spaced from all portions of the wall of the container, and shall be of such material that no accumulation or deposit is possible, the extent of surface presented by the wall of the container, and the special central electrode, insuring uniformity of temperature at all points, in the product being treated, thereby avoiding well understood and undesirable conditions in connection with the use of this class of apparatus as heretofore constructed. A predetermined voltage will determine the relative position of the electrodes, and increase in the temperature of the milk, due to the resistance of the fluid to the alternating current employed, is especially avoided.

A further object is to provide a central electrode comprising a plurality of independent elements, of graphite or the like, it being impossible to employ opposed metallic electrodes in the treatment of milk.

A further object is to provide for the agitation of the milk, in order to facilitate the circulation of the fluid, and aid in the distribution of heat, so that variation in the degree of conductivity of the fluid in different parts of the container (if developing notwithstanding other means provided), may be reduced to a minimum.

All overheating of surfaces is avoided, and milk has been heated to a temperature of 161° F. without apparent change in flavor or in the "cream line."

A still further object is to provide for mounting the central electrode, for mounting the agitator and driving means therefor, and for mounting the elements of a closure for the top, so that these and a temperature indicating device may be withdrawn as a unit for cleaning purposes,—the upper transverse mounting member here disclosed also accommodating the electric conductor or conductors.

Another important object is to avoid imparting to the milk anything resembling a metallic taste.

With the foregoing and other objects in view, the invention consists in the novel construction and arrangement of elements herein disclosed, it being understood that alterations or modifications may be made within the scope of the claims without departing from the spirit of the invention.

In the drawings,

Figure 1 is a view of the apparatus in vertical section; Figure 2 is a fragmentary view of the detachable unit including the central group of electrodes and agitator, the view being in elevation; Figure 3 is a top plan view of the structure of Figure 2; Figure 4 is a detail in section on the line 4—4 of Figure 3; Figure 5 is a fragmentary view, constituting a horizontal section on line 5—5 of Figure 1.

The container includes a metallic wall 10, covered on the outer side with bakelite and sponge asbestos insulation 11 which extends beneath the bottom of the receptacle, and a suitable supporting structure includes an annular member 12 and legs 13, a band or bands such as 13' serving an obvious purpose. An outlet member 15 provides a threaded sanitary draw-off connection, and an outer jacket appears at 11'.

An agitating device includes a shaft 18 mounting blades such as 19, and the upper end of the shaft carries a pinion or gear wheel 20 meshing with gear wheel 21 on shaft 22 having thereon a driving pulley wheel 23. A noiseless gear drive may be directly operated from a motor. A bracket 24 includes shaft bearing 25, and a bearing 26 is provided for shaft 18. Shaft insulation is shown at 18'. The structure just referred to is carried by transverse member 28 including a channel portion 29, and an electric conductor 30 is detachably connected at terminal 31 with the stem 32 of the central electrode. The latter depends from and is supported by the transverse member 28 detachably mounted on the walls of the container.

The metallic wall 10 receives current through conductor 33, the connections being through boxes designated by reference numbers 34, 34' the former being removable with the cover.

A recording thermometer 35 is shown conventionally, and a thermometer 36 depends from the upper removable element 28, permitting transfer to a suitable position for cleansing purposes.

The central electrode includes upper annular member 40, and a plurality of graphite elements 41. Five elements 41 have been found to represent a suitable and practicable assembly; and extensive surface, and suitable spacing for circulation will be afforded. When employing a voltage of 110, the spacing between the outer electrode, or

the wall of the container, and the outer surface of electrodes 41 will be approximately four and one-half inches. The distance may be altered with a change of voltage.

Elements 41 are individually detachable from the annular element 40,—any suitable mounting means being employed, as for instance the devices shown in the drawings. The material employed for the inner and outer electrodes may be varied within the scope of the invention, but graphite and the well-known commercial Allegheny metal are suitable, the latter being used in the construction of the container and elsewhere if desired, but not as an opposed electrode. Use of the electrode materials in the relation and in the relative positions specified, and in connection with agitating means, and a predetermined voltage, are important features of the invention. The electrodes per se are to be considered primarily. Allegheny metal includes nickel, steel, and chromium, and if the carbon electrode members are approximately cylindrical they will of course present surface portions curving away from the outer metallic electrode, whereby there will necessarily result a slight variation between different portions of the surface of the carbon members, and the opposed electrode, because of the variable distance and the body of fluid through which the current passes. This action promotes circulation locally and is of advantage in the complete operation. The saline constituents of the milk of course have a direct bearing on its resistance. Allegheny metal has not heretofore been employed for the purpose under consideration, the manner in which it functions in heating milk, as distinguished from other metal or alloys used as electrodes, being evidently unsuspected.

A two part cover includes elements 43, 44 connected with transverse member 28, and removable therewith from the container.

A three-phase or multiphase current may likewise be employed in this form of apparatus, the electrodes described being adapted therefor.

The following is claimed:

1. In an apparatus of the class described, a container including a wall constituting an electrode, said wall including a plurality of metallic elements constituting an alloy, comprising nickel, steel, and chromium, means for insulating the wall, a transverse element extending across the upper portion of the container, an inner electrode connected with the transverse element spaced with reference to the walls of the container, and including material preventing the surface accumulation during pasteurization of any portion of the milk content of the container.

2. An apparatus of the class described, including a plurality of electrodes, one of which comprises a series of non-metallic elements spaced inwardly from the walls of the other electrode, at a distance determined in accordance with the voltage to be applied to a body of milk to be pasteurized, said other electrode being formed of an alloy cooperating with the non-metallic electrode in maintaining milk under pasteurizing temperature without affecting food qualities or taste, and said alloy including chromium.

3. An apparatus of the class described, comprising an outer chambered electrode, and an inner electrode composed of a plurality of elements, each including an active surface curved away from the active surface of the chambered electrode, producing variable temperature zones promoting movement of a fluid being heated, said elements of the inner electrode being assembled in a series arranged approximately concentrically with reference to the wall of the chambered electrode.

4. A structure comprising the elements of claim 3, and mechanical agitating means interposed between the inner and outer electrodes.

5. In an apparatus for pasteurizing milk, an electrode forming one side of a circuit, and cooperating therewith, an electrode including steel, chromium, and nickel spaced from the electrode first named, and means for completing an electric circuit through said electrodes.

THOMAS H. ANGLIM.