HEAT TREATMENT OF SHEET AND WEB MATERIALS

Filed Sept. 11, 1967

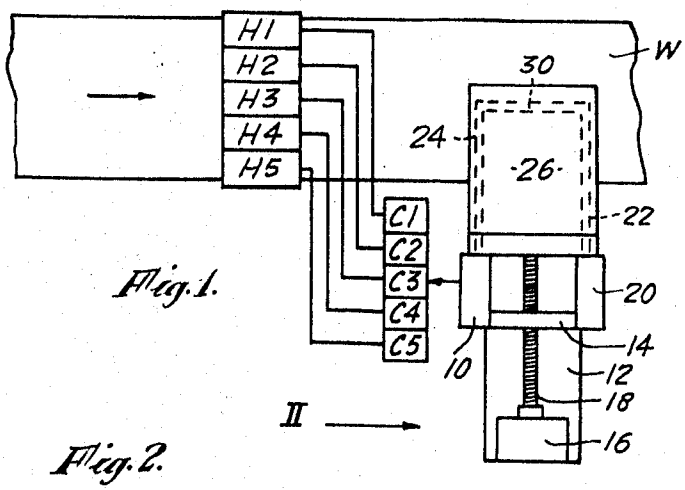

Fig. 1.

Fig. 2.

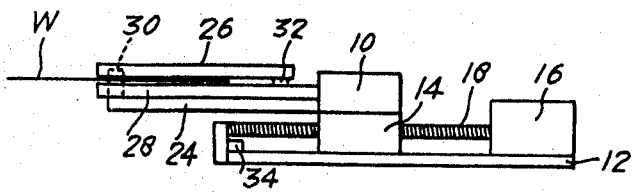

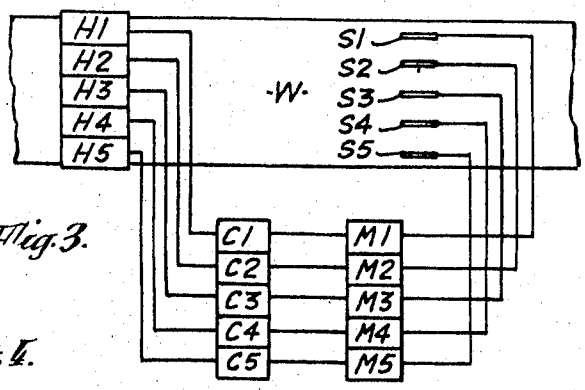

Fig. 3.

Fig. 4.

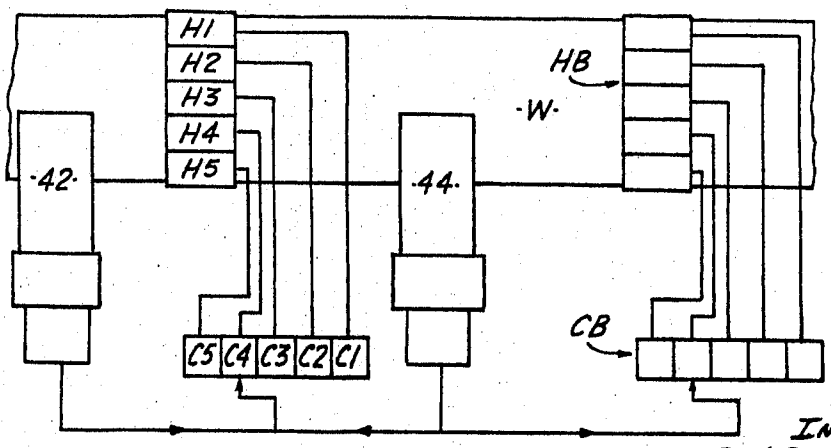

INVENTOR
JACK BILBROUGH
By Jacobs & Jacobs

United States Patent Office

3,470,343

Patented Sept. 30, 1969

1

3,470,343
HEAT TREATMENT OF SHEET AND WEB MATERIALS

Jack Bilbrough, Newcastle-upon-Tyne, England, assignor to The Rank Organisation Limited, London, England, a company of Great Britain and Northern Ireland

Filed Sept. 11, 1967, Ser. No. 666,672
Claims priority, application Great Britain, Sept. 13, 1966, 40,799/66
Int. Cl. H05b *9/06, 5/04*
U.S. Cl. 219—10.61 10 Claims

ABSTRACT OF THE DISCLOSURE

A heat treatment apparatus measures the moisture content at different zones across the width of a travelling sheet or web by microwave energy techniques and the measurement signals are used to regulate the output of heating units at corresponding zones so that variations in the heat treatment effects between such different zones can be controlled. The measurements may be made at stations preceding and following a heating stage and an auxiliary heating stage, which may itself be microwave powered, can follow a main heating stage to make a second order adjustment of the heat treatment effects across the width of the web.

In the manufacture of fibrous sheet and web materials, such as paper and textiles, wet processes are involved and one of the major problems is to remove excess moisture from a travelling sheet or web of material as it advances through a manufacturing or treatment process.

In addition to the problem of removing the moisture, there exist difficulties in ensuring a uniform moisture content or constant dryness across the width of a sheet or web of fibrous material. This is particularly apparent in the manufacture of paper, as the margins tend to dry more quickly than the middle area.

An object of the present invention is to provide an apparatus for heat treatment, for example to promote or ensure uniform moisture content, or constant dryness, across the width of a sheet or web of fibrous material, by using microwave moisture measurement means linked with a control system enabling different rates of heat input to be applied across the width of the moving sheet or web.

The present invention provides an apparatus for the heat treatment of sheet and web materials, comprising waveguide means having slots along opposed walls of a microwave energy path therethrough said slots being adapted for the passage of a portion of the width of a travelling sheet or web of material across said path, microwave source input means and detector output means associated with said waveguide means to measure the moisture content of said material in said energy path, a plurality of heating means disposed adjacent said sheet or web each to heat different portions of the width thereof, respective controllers connected one to each heating means to control the output therefrom and means applying to said controllers signals emitted by said detector means to relate the output of each heating means to the moisture content measurement of a corresponding portion of the width of the web.

In the prior patent application Ser. No. 575,871 there is disclosed a hollow waveguide for use in the measurement of moisture content of a sheet or web of material, said waveguide being formed with slots in opposed walls and the transmission path defined by the waveguide curved to such a shape that its length within the region of said slots lies to one side of a line traversing the ends of the slots, the plane containing the curve being transverse to the planes of the slotted walls whereby movement of the

2

waveguide in the plane of the curve can bring one edge of the sheet or web into the slots. More particularly there is described in the specification filed in said application Ser. No. 575,871, with reference to FIG. 4 of the accompanying drawings, a hollow waveguide as aforesaid so arranged that the slotted portion can be disposed transversely of the sheet or web of material across the direction of movement thereof so as to obtain an indication of moisture content at a distance from an edge of a sheet or web, and also at any arbitrarily chosen portion of the width.

Further, in the prior patent application Ser. No. 633,901 there is disclosed a form of hollow waveguide for use in the measurement of moisture content of a sheet or web of material, and comprising a main portion extending from a connecting portion, the axes of said portions being mutually angularly offset, the waveguide being divided by a slot extending along the length of the main portion and through the adjacent region of the connecting portion, said connecting portion projecting to one side of the plane of the slot, that part of the waveguide to the other side of said plane being displaceably mounted to permit passage through the slot of an obstruction or joint in the sheet or web, or a thicker material. More particularly, there is described in the specification filed in said application Ser. No. 633,901, with reference to FIG. 6 of the accompanying drawings, a form of waveguide comprising input and output arms adapted to extend transversely of a web material from one side to an intermediate zone thereof and having at their inner ends cranked portions connecting them to opposite ends of an offset divided portion which extends in a direction parallel to the length of the web. This arrangement may be mounted to enable displacement of said offset portion to monitor small areas across the width of the web.

In the apparatus according to the present invention, as above recited, the slotted waveguide means may be provided in either of said forms as disclosed in application Ser. No. 575,871 or application Ser. No. 633,901.

The heating means may be of a kind to heat a strip or web of material by application thereto of a direct flame, or heated gas or vapour, such as dry or superheated steam or combustion products of gases, the temperature and/or quantity of heat being regulated by known means under electro-mechanical control by said controllers. Alternatively, the heating means may be of a kind to generate heat internally in the substance of the sheet or web of material by the application of radiant heat, or high-frequency alternating current from an electrical source regulated by known means under control by said controllers.

The invention will now be more particularly described with reference to the accompanying drawing, wherein:

FIG. 1 is a diagrammatic plan view of a first form of apparatus according to the invention,

FIG. 2 is a view of the waveguide means and its mounting in the direction of the arrow II in FIG. 1, and

FIGS. 3 and 4 are diagrammatic plan views of two further forms of apparatus according to the invention.

Referring to FIGS. 1 and 2 of the drawing, the width of a travelling web W of wet paper, in process of formation and requiring to be dried, is divided into five discrete drying zones across its width, to each of which is applied a separate heating unit H1, H2, H3, H4, H5. These units are shown in a combined rank extending transversely across the web but they may be separately mounted, for example if required by their construction or the disposition of their heat source connections and controls, in staggered disposition over a short length of the path of the sheet or web. Each of said heating units is connected to one of five controllers C1, C2, C3, C4, C5

adapted to receive signals emitted by microwave detector means **10**, and to provide a modulated and amplified output in dependence upon said signals to control the degree of heating applied to the several zones of the sheet or web by the heating units.

The moisture measurement means associated with the detector **10** is carried by a baseplate **12** on which a carriage **14** is supported for movement transversely to the direction of travel of the web W by means of a motor **16** and lead screw **18**. Alternatively, the traversing motion may be produced by such means as a fluid pressure ram or a rack-and-pinion drive. The carriage mounts a microwave source **20** and the detector **10**, a waveguide path between these members being provided by inlet and outlet waveguides **22**, **24** and slotted plates **26**, **28** forming an intermediate waveguide **30** joining the waveguides **22**, **24**. The plates **26**, **28** are also supported on the carriage **14** and are arranged in an analogous manner to the construction illustrated in FIG. 4 of the specification of application Ser. No. 575,871, the upper plate being slidable towards and away from the lower plate on pins **32** and the intermediate waveguide **30** comprising aligned channels in the adjacent faces of the two plates.

By movement of the carriage through rotation of the lead screw **18**, the waveguide **30** is traversed over the width of the sheet or web in alternate directions. The movement may be controlled by limit switches, such as **34**, in the circuit to the motor **16** and operable by the carrage as it is displaced. The control may be exercised so that the carriage moves continuously or in step-wise manner using time delay means if required. As the carriage moves, the moisture content of different regions of the width of the web or sheet determines the detector output. A switching connector **36** movable with the carriage **14** transmits this output signal to the control unit associated with the heater acting on that particular region of the width and the drying rate is accordingly adjusted.

In an alternative arrangement shown in FIG. 3, there is shown a similar arrangement of five heating units **H1**, **H2**, **H3**, **H4**, **H5** and associated controllers **C1**, **C2**, **C3**, **C4**, **C5**. Here, however, each controller receives its input signal from a separate moisture measurement unit comprising microwave source and detection means **M1**, **M2**, **M3**, **M4**, **M5** connected to respective slotted waveguides **S1**, **S2**, **S3**, **S4**, **S5** that are at fixed positions spaced across the width of the sheet or web W. The individual moisture measurement means may be constructed in an entirely analogous manner to that described with reference to FIG. 6 of the specification of application Ser. No. 633,901 and further illustration here is therefore unnecessary.

It is, of course, possible to modify the arrangements illustrated in FIGS. 1 to 3 so that respective pairs of plates **26**, **28** are held fixed at different stations across the width of the sheet or web and are continuously connected to an associated controller, or, alternatively, so that a single slotted waveguide of the form indicated in FIG. 3 is transversely displaceable in the manner of the intermediate waveguide portion **30** of FIGS. 1 and 2.

In the use of the described constructions, it is clear that the heating may be regulated so that when the moisture content of any one zone, as measured by the waveguide apparatus applied to that zone, is higher than required, the heat applied by the relevant heating unit is increased, or when, as may occur particularly at the margin of a web, the moisture content is too low, the application of heat by the relevant heating unit is reduced or temporarily stopped. There may thus be obtained a distribution of heating across the width of the sheet or web inversely related to the transverse distribution of moisture content as measured by the waveguide means, and so regulated as to provide the required distribution of moisture content or dryness across the width of the sheet or web.

In a practical application of the invention, it is feasible to provide more than five transversely distributed zones, according to the width of the sheet or web to be treated. For example, ten or twelve zones are within the limits of practical application. In an apparatus for the treatment of sheets or webs of material which may have different widths, the controllers may be subjected to an over-riding manual or automatic control whereby any heating unit which is located beyond the edge of a sheet or web, and its associated controller, are rendered inoperative.

The controllers may further be subjected to comparison controls manually or automatically adjustable to regulate the degree of heating applied to the sheet or web, or to individual zones thereof, for example, in accordance with the drying characteristics affected by the nature or weight of the material of the sheet or web. In one mode of automatic control, a traversing slotted waveguide, or a plurality of fixed slotted waveguides distributed transversely may be applied to the sheet or web in advance of the heating means and in addition to the moisture measurement means shown in the preceding examples following the heating means. The detector means associated with the waveguide means at this advance position are then connected into the controllers so that these are actuated each by two signals respectively dependent on the moisture contents of each transverse zone of the web prior to and following the heat treatment. Such an arrangement is shown in FIG. 4 using transverse slotted waveguides in the moisture measurement means **42**, **44** similar to the example in FIGS. 1 and 2.

Alternatively, or additionally, a second or auxiliary heat treatment or drying stage may be provided to follow means as aforesaid, and if required correct or modify the distribution of moisture content achieved thereby. This is indicated in FIG. 4 where the second moisture measurement means **44** is shown connected to the controllers **C1**, **C2**, **C3**, **C4**, **C5** together with the measurement means **42** and is additionally connected to a second bank of controllers CB to regulate the output of a second bank of heating units HB.

In such an auxiliary heating stage, where the power input requirements may be relatively small, the application of heat may be effected by means of large quantities of microwave power, applied either by the same waveguide means which is or are employed to measure the local moisture content, or by separate slotted waveguide means controlled by said measuring waveguide means.

What I claim and desire to secure by Letters Patent is:

1. Apparatus for the heat treatment of sheet and web materials, comprising waveguide means having slots along opposed walls of a microwave energy path therethrough, said slots being adapted for the passage of a portion of the width of a travelling sheet or web of material across said path, microwave source input means and detector output means associated with said waveguide means to measure the moisture content of said material in said energy path, a plurality of heating means disposed adjacent said sheet or web each to heat different portions of the width thereof, respective controllers connected one to each heating means to control the output therefrom and means applying to said controllers signals emitted by said detector means to relate the output of each heating means to the moisture content measurement of a corresponding portion of the width of the web.

2. Apparatus according to claim **1** wherein said waveguide means comprises a plurality of slotted waveguide portions each embracing a portion of the width of the web or sheet corresponding to the respective portions heated by the heating means, a detector associated with each slotted waveguide having means applying the signals emitted therefrom to the controller of the heating means for said corresponding portion of the width of the web or sheet.

3. Apparatus according to claim 1 wherein mounting means for said waveguide means comprises a carriage displaceable transversely to the direction of travel of said sheet or web to bring said slotted path into registration with different portions of the width of the sheet or web, switchig means arranged to connect the detector means and the controllers to transmit the detector output to the respective controllers in turn, said switching means being actuable in co-ordination with the displacement of said slotted energy path whereby each controller receives a detector output signal from the moisture content measurement of the same portion of the width of the sheet or web as its associated heating means.

4. Apparatus according to claim 3 wherein the carriage is arranged to be displaced continuously across the sheet or web.

5. Apparatus according to claim 3 wherein the carriage is arranged to be displaced in step-wise manner across the sheet or web.

6. Apparatus according to claim 1 wherein waveguide means disposed both ahead of and after the heating means relative to the direction of travel of the sheet or web, are arranged to feed a combined measurement signal to the controllers whereby each heating means is controlled in dependence upon the measured moisture content of its associated portion of the width of a sheet or web both before and after said portion has been subjected to its heating action.

7. Apparatus according to claim 6 having a plurality of auxiliary heating means disposed beyond said main heating means in the direction of travel of the sheet or web, each to heat different portions of the width of the sheet or web, respective controllers connected one to each of the auxiliary heating means to control the output therefrom and a slotted energy path of said waveguide means being disposed between the main heating means and the auxiliary heating means and being arranged to provide input signals to the controllers of both.

8. Apparatus according to claim 1 having a plurality of auxiliary heating means disposed beyond said main heating means in the direction of travel of the sheet or web, each to heat different portions of the width of the sheet or web, respective controllers connected one to each of the auxiliary heating means to control the output therefrom and a slotted energy path of said waveguide means embracing the sheet or web being disposed beyond said first heating means to provide moisture measurement input signals for the controllers of said auxiliary heating means.

9. Apparatus according to claim 7 wherein said additional heating means is in the form of microwave transmission members.

10. Apparatus according to claim 6 wherein said waveguide means disposed after said heating means is arranged to act also as said additional heating means.

References Cited

UNITED STATES PATENTS

3,079,551	2/1963	Walker.	
3,304,399	2/1967	Timmermans	219—10.61 X

JOSEPH V. TRUHE, Primary Examiner

L. H. BENDER, Assistant Examiner

U.S. Cl. X.R.

219—10.55, 10.77; 324—58.5