May 18, 1943. P. G. COX ET AL 2,319,766

PUNCH PRESS TOOL

Filed May 14, 1941 3 Sheets-Sheet 1

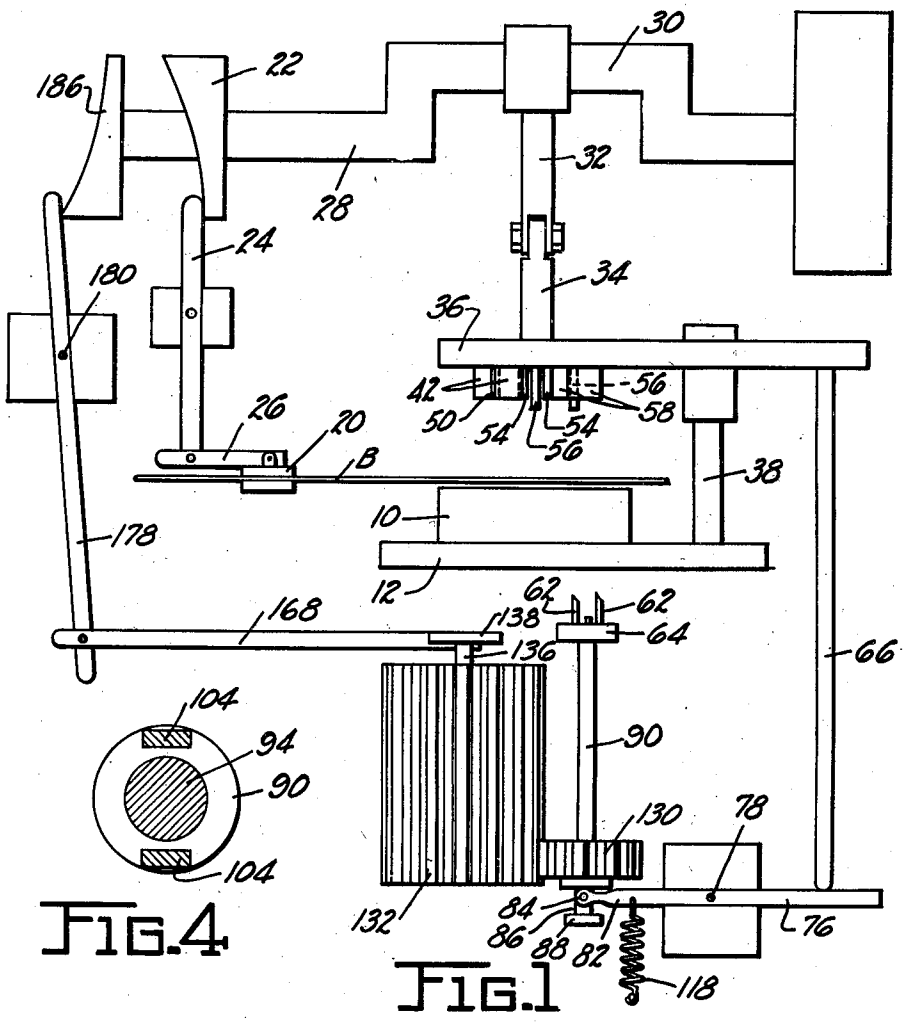

FIG. 4

FIG. 1

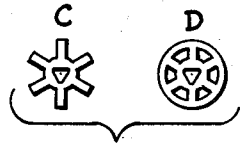

FIG. 6

INVENTOR
PARKER G. COX
JAY T. BLACK
GUY C. FRICKE

BY A. R. McCrady ATTORNEY

May 18, 1943. P. G. COX ET AL 2,319,766

PUNCH PRESS TOOL

Filed May 14, 1941 3 Sheets-Sheet 2

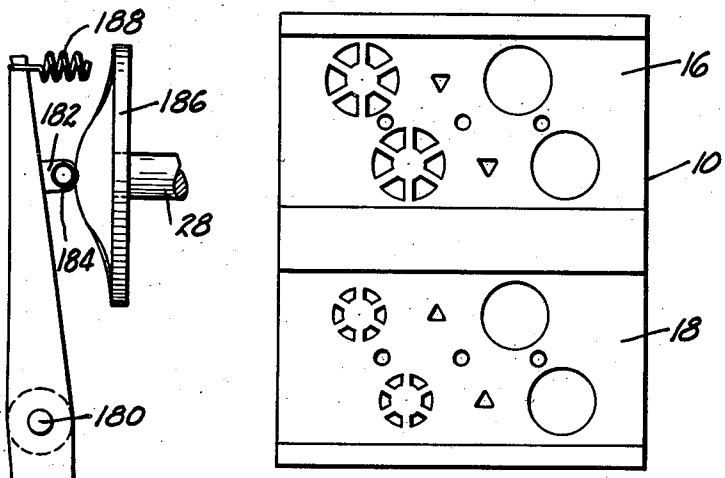

FIG. 7

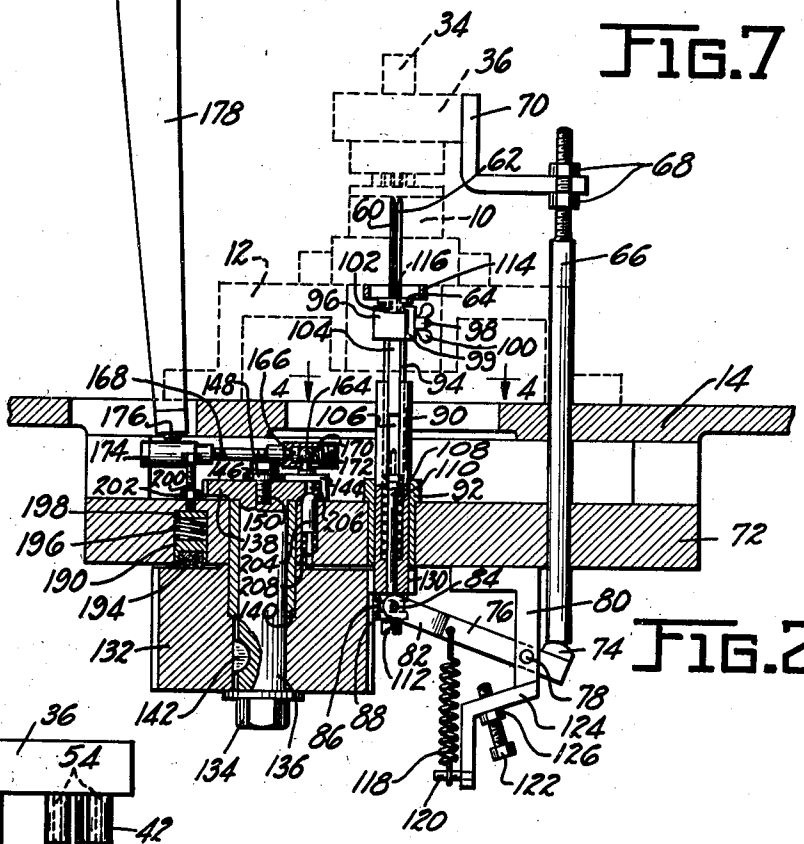

FIG. 2

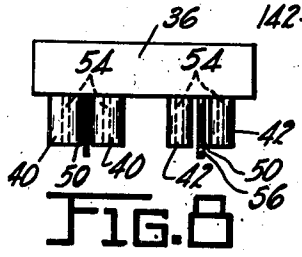

FIG. 8

INVENTOR
PARKER G. COX
JAY T. BLACK
GUY C. FRICKE

BY
A. R. Mc Crady
ATTORNEY

May 18, 1943. P. G. COX ET AL 2,319,766

PUNCH PRESS TOOL

Filed May 14, 1941 3 Sheets-Sheet 3

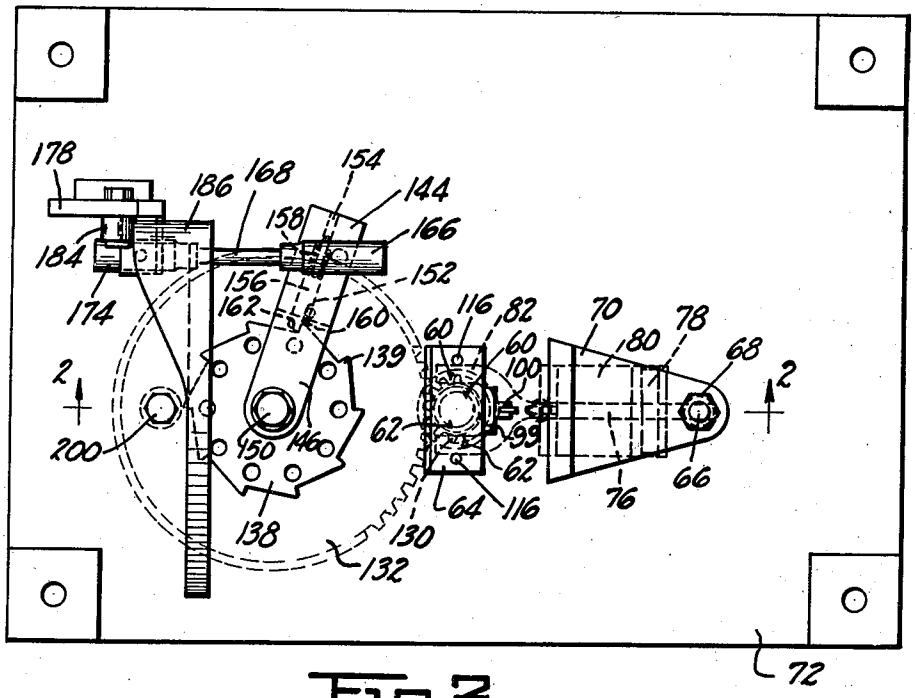

FIG. 3

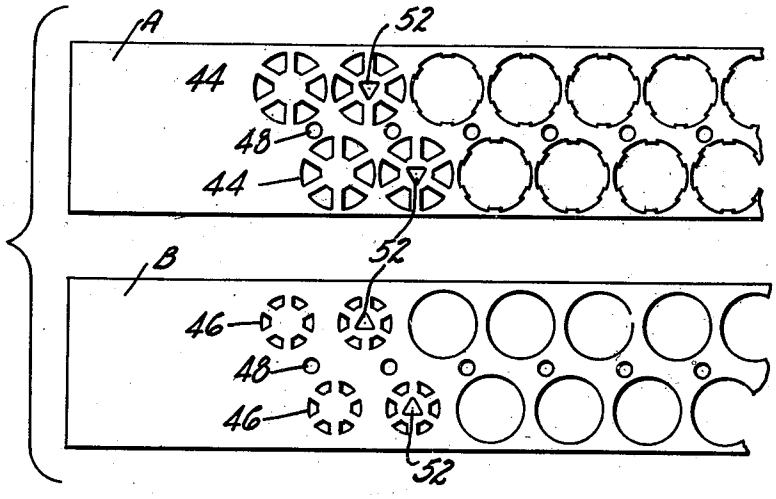

FIG. 5

INVENTOR
PARKER G. COX
JAY T. BLACK
GUY C. FRICKE

BY A. R. McCrady ATTORNEY

Patented May 18, 1943 2,319,766

UNITED STATES PATENT OFFICE

2,319,766

PUNCH PRESS TOOL

Parker G. Cox, Jay T. Black, and Guy C. Fricke,
Detroit, Mich.

Application May 14, 1941, Serial No. 393,402

10 Claims. (Cl. 164—21)

This invention relates to punch press tools and particularly to tools of this character for automatically forming and assembling "edge type" filtering stacks such as are described in the patent to V. R. Heftler, No. 1,641,485, patented September 6, 1927.

Filtering stacks of this type are built up of two different forms of elements arranged alternately and heretofore both types of elements have been of the same thickness.

However, it has been found that for some purposes it is necessary to strengthen the filter stack without increasing the size of the filtering passages. This is effected by using wheel elements that are thicker than the star elements thus making it necessary to cut the respective elements from strips of stock of different thicknesses.

Present punch tools, as far as we are aware are not adapted to satisfactorily form and assemble filter elements wherein said elements are of different thicknesses and it is, therefore, an important object of the invention to provide a punch press tool for automatically punching and assembling said elements into filter stacks.

Another object of the invention is to provide a device of this character which will pierce and blank out the respective types of elements from a plurality of pieces of stock and automatically assemble the different types of pieces in a definite and recurring order or arrangement.

Still another object of the invention is to provide a device of this character wherein the stacking means is movable to receive and stack the various types of elements alternately as said elements are blanked from the respective pieces of stock.

A further object of the invention is to provide a device of this character which will simultaneously pierce and blank a plurality of pieces or filter elements from each ribbon of stock and which will assemble same in a plurality of stacks.

While it will be understood that this invention may be applied to the manufacture of other products when it is desired to form and assemble a recurring series of two or more different types of pieces, the following description will disclose the invention as applied to the manufacture of the above mentioned "edge type" filter wherein there are but two types of pieces which are arranged in simple alternation. Reference will therefore be had to this specific application of the invention as shown in the accompanying drawings, wherein:

Figure 1 is a diagrammatic view of the invention attached to a punch press;

Figure 2 is a vertical section of the invention taken on line 2—2 of Figure 3;

Figure 3 is a plan view of the invention as seen with the bed or table of the press removed;

Figure 4 is an enlarged horizontal section taken on line 4—4 of Figure 2;

Figure 5 shows, at A and B, plan views respectively of the ribbons of metal from which are cut two rows each of stars and wheels. The perforations for the stars and wheels, cut in the respective ribbons prior to the blanking out operation, are also shown;

Figure 6 shows, at C and D, the two different types of pieces made by the particular tool described herein and the orientation of the pieces with respect to each other. It is to be noted that both types of pieces have a central triangular aperture so that when pieces of both types are alternately stacked on a stem, triangular in cross-section, the assembly constitutes an "edge type" filter stack;

Figure 7 is a plan view of the die blocks for punching and blanking the stars and wheels respectively; and

Figure 8 is a diagrammatic end view of the upper bolster plate carrying the punches.

As the punch press to which the present invention is attached may be of any well known type suited to the present purpose only such parts thereof have been shown, and will be described hereinafter, as are necessary to a proper understanding of said invention.

In so-called progressive dies, the work to be performed is divided into several operations and the material is fed so that it is successively submitted to the various operations. During these operations the piece remains fixed to the mother stock, while it is moved from one station to the next and it is only at the final station, usually called the blanking out station, that the final ties are sheared and that the completed piece falls through the blanking die.

The piercing and blanking of the star and wheel elements in the present invention is effected in the manner described in the next preceding paragraph, and, referring to the drawings the present device comprises a die block 10 fixed to a bolster plate 12 which in turn is secured to bed 14 of the punch press. The die block 10 has two parallel grooves 16 and 18 wide enough to slidably receive strips or ribbons of metal A and B respectively (Figure 5) therein and to guide said strips over the respective sets

of dies for piercing star and wheel patterns and blanking out the star and wheel elements.

The mechanism whereby the strips A and B are fed to the dies includes a feed device 20 of well-known construction and operation which is actuated by a cam 22 through pivoted lever 24 and link 26. Cam 22 is mounted on a crankshaft 28 of the press and the crank portion 30 of said crankshaft is provided with a connecting rod 32 pivoted to the shank 34 of an upper bolster plate 36 which is reciprocatingly mounted on a guide 38 and which carries the punches which cooperate with the dies in the die block.

At the first station the pattern for the star-wheel elements are punched in the strips A and B by punches 40 and 42 respectively, the patterns appearing in the ribbons A and B as shown at 44 and 46 in Figure 5. At this station each strip is also perforated at 48 by punches 50. At the next station a triangular center perforation 52 is punched in each pattern by punches 54, said patterns being properly positioned longitudinally of the die block over the respective dies by the entrance of pins 56 in respective perforations 48 in the strips A and B. At the final stations the star and wheel elements, shown at C and D respectively in Figure 6, are blanked out by blanking punches 58 and said elements then drop through the blanking dies.

It should be noted that two elements are pierced and cut from each strip of metal simultaneously in staggered relationship, as shown particularly in Figure 5 thus reducing waste of material.

The elements as they fall through the respective blanking dies are stacked by assembling mechanism which includes a loader having loader pins 60 and 62 secured in a loader plate 64. The loader pings 60 and 62 are triangular in cross-section and arranged in staggered relationship as shown in Figure 3, the apexes of respective pins 60 being pointed toward the apexes of respective pins 62. When the filter elements are cut from the mother stock, the free ends of the loader pins are positioned in the respective blanking dies directly beneath the triangular perforations 52, said perforations having been so punched, as shown in Figure 5, that their apexes correspond to those of the respective pins upon which they fall. The pins 60 receive star elements while the pins 62 receive wheel elements. The loader then is moved downwardly to a position whereat the loader pins clear the die block and the loader is then rotated 180° and raised to the loading position above described as the punches descend and operate on the strips of stock. As the loader has been rotated 180°, the pins that received star elements now receive wheel elements and those that received wheel elements receive star elements. As this operation continues four stacks of elements are assembled with each stack built up of alternately arranged elements.

The number of stacks built up simultaneously is determined by the number of elements cut simultaneously from the strips of stock. If only one star and one wheel element were thus cut out, the loader would be provided with but two loader pins and two stacks would be simultaneously built up. On the other hand, should three or more elements be simultaneously cut from each strip of stock the loader would be provided with six or more loader pins according to the total number of elements simultaneously blanked from the strips of stock.

Due to the small cross-sectional area of the loader pins it has been found that they have a tendency to whip and vibrate when the loader is rotated and to prevent excessive whipping and vibration it is necessary to limit the length of said pins. Therefore, to provide for the stacking of a relatively large number of the elements on the loader before it is necessary to remove a fully loaded loader and replace it with an empty one it is necessary to provide for the building up of more than two stacks on the loader. Four loader pins for building four stacks simultaneously appears to be a satisfactory number for efficient operation of the machine bearing in mind the necessary limitations of the size of the loader pins.

The operation of the loader, as hereinabove described, includes both reciprocating movements and rotary movements. The mechanism for effecting vertical reciprocating movement of the loader includes a rod 66, threaded at its upper end and provided with nuts 68 between which a bracket 70 is clamped, said bracket being attached to the upper bolster plate 36 so that the rod 66 moves with said plate. Rod 66 passes through an opening in table 14 and a frame member 72 and the lower end of said rod engages the upper rounded surface of a knob 74 of a yoke 76 which is pivoted at 78 to a bracket 80 secured to member 72 so that downward movement of the knobbed end of the yoke raises the other end thereof. Said other end of the yoke is forked at 82 and each prong thereof has a pin 84 extending toward the opposite prong in substantially axial relationship therewith. Pins 84 are received in an annular groove 86 in a collar 88 at the lower end of a vertical shaft 90 which is rotatably and slidably received in a bearing 92 in frame member 72. Shaft 90 is provided with a small longitudinal bore at its lower end and an enlarged longitudinally extending connecting bore throughout the rest of its length in which is slidably received a shaft 94 having a fixed clamp member or jaw 96 secured to its upper end. The clamp member 96 has a laterally extending bolt 98 on which a movable jaw 99 is mounted and tightened by a winged nut 100. The jaws of the clamp are adapted to receive and releasably secure a depending dove-tailed portion 102 of the loader plate 64. The loader may therefore be securely held in the clamp when the device is being operated but is removable when the loader pins are loaded and it is desired to replace said loader with an empty one.

Rotation of the clamp relative to shaft 90 is prevented by bars 104 which are fixed to said clamp and depend therefrom in spaced parallel relation to shaft 94, said rods being received in diametrical external grooves 106 in shaft 90. Shaft 94 is retained in shaft 90 by a screw 108 received in the lower end of the latter shaft and a spring 110 disposed about said screw reacts between the lower end of shaft 94 and the lower end of the enlarged bore of shaft 90 and yieldingly urges the shaft 94 upwardly, limited normally by head 112 of screw 108. This construction permits telescoping of shafts 90 and 94 when the loader is raised, said loader being limited in its upward movement by impingement against a member 114 beneath the die block. Thus too great an extension of the loader pins into the blanking dies of the die block is prevented and avoids any injury thereto by contact with the descending blanking punches, the loader pins being of such length as to have their ends spaced from said blanking punches when the latter are at

their lowermost position and said pins are at their upper limit of movement.

In order to positively position the loader pins beneath the perforations 52 for the blanking and loading operations, lugs 116 are provided on the upper face of the loader plate 64, said lugs being received in positioning holes provided therefor in member 114. Descent of the loader and supporting parts is effected by gravity and a spring 118 connected at one end to the yoke 76 and at the other end to a pin 120 fixed in an extension of bracket 80. A screw 122 in an inclined intermediate portion 124 of the bracket 80 provides stop means for limiting the downward movement of the loader and a lock nut 126 locks said screw in any desired position of adjustment.

The rotative movement of the loader is effected by the following described indexing mechanism:

A gear 130 is carried by shaft 90 adjacent the lower end thereof and meshes with a gear 132 of sufficient length to permit gear 130 to remain in mesh therewith throughout the vertical travel of said gear 130. Gear 132 is secured by screw 134 to a vertical shaft 136 having a ratchet wheel 138 at its upper end and a sleeve 140 spaces the wheel 138 and gear 132 apart so as to prevent binding thereof against member 72 in which said sleeve is adapted to rotate. A key 142 locks the gear 132 against rotative movement on the shaft 136. The ratchet wheel is actuated by a ratchet including a lever 144 having an extension 146 of reduced thickness which floats on a shoulder 148 of a screw 150 screwed into the free side of ratchet wheel 138 in axial relationship therewith. The lever is provided with a bore 152 and an extension 154 thereof of reduced diameter. A ratchet rod 156 is reciprocatingly received in bore 152 and adapted to be urged into operative engagement with the ratchet wheel 138 by a spring 158 reacting between the inner end of rod 156 and the adjacent end of bore 152. The extension 154 of bore 152 prevents undesirable pressures in bore 152 which might otherwise prevent free movements of the rod 156. Rod 156 is provided with a longitudinally extending flattened surface 160 adapted to engage the radial surfaces of the teeth 139 of wheel 138 and the free end of said rod 156 is flattened at 162, the surface 162 being inclined to the axis of the rod and adapted to slide freely on the teeth of the wheel 138 and to also prevent rotation of said rod 156 in the bore 152 by engagement with said wheel 138.

The lever 144 has a ball headed screw 164 screwed therein adjacent the free end thereof, said ball head being received in a socket 166 adjacent one end of a link 168. A spring 170, held in the socket 166 by a threaded plug 172, provides yielding retaining means for the ball head of screw 164. A similar socket 174 adjacent the opposite end of link 168 receives the ball head of a screw 176 in the end of an actuating lever 178 pivoted at 180 and having an ear 182 adjacent its other end. Each 182 is provided with a roller 184 which engages the peripheral cam surface of a cam 186 on crankshaft 28 of the press. A spring 188 yieldingly urges the roller 184 into engagement with the cam 186.

Rocking movement of lever 178 causes oscillation of lever 144, thereby effecting intermittent rotative movement of ratchet wheel 138 through rod 156 which progressively engages the teeth of said wheel 138 and rotates said wheel a limited amount with each wheel actuating movement of said lever 144. The ratio of gears 132 and 130 is such that the limited rotation of the former effected by the ratchet mechanism effects a 180° rotation of the latter gear.

To prevent too free rotation of gear 132, a friction device is provided which comprises a plunger 190 slidable in a bore in member 172 and having a friction plug 194 of leather or other suitable material which is pressed against the upper surface of gear 132 by a spring 196 which reacts between the inner end of plunger 190 and a plate 198 which is movable by a screw 200 to adjust the tension of spring 196. A lock nut 202 is provided on screw 200 to lock same in adjusted positions. While only one such friction device is shown in the drawings and herein described a plurality of them may be used if desired.

Means is also provided for effecting accurate positioning of the indexing ratchet wheel after each operative movement of the ratchet. The positioning means comprises a pin 204 in a bore in member 72 beneath wheel 138, the rounded head of said pin being urged into yieldable engagement with holes 206 in said wheel 138 by a spring 208. The holes 206 are arranged annularly about the axis of wheel 138 and one hole is provided for each tooth 139 and positioned so that at the end of each operative movement of said wheel the pin 204 will enter one of the holes 206. The pin 204, aided by the friction device described in the next preceding paragraph, resists reverse rotation of the wheel 138 and gear 132 which might otherwise occur during the return movement of the ratchet operating lever after an operative movement thereof. It will be understood that while one positioning device including the pin 204 is shown and described several of said devices may be used if required.

A brief summary of the operation of the invention is as follows:

With each punching operation of the press, the bolster plate 36 carrying the punches, descends and simultaneously the loader is moved to its uppermost position where its loader pins receive the respective filter elements blanked from the strips of stock. As the plate 36 is raised by the crank 30, the loader descends to a position whereat the loader pins are clear of the die block. Cam 186 then actuates the indexing mechanism whereby the loader is given a turn of 180°. As the punches descend for the next punching operation, the loader is again raised to the loading position.

While the invention has been made primarily for the forming and stacking of elements or stampings of different thicknesses it is to be understood that it also has utility in stacking elements of different types or having different characteristics even though said elements are not of different thicknesses.

It is thought that the invention and many of its attendant advantages will be understood from the foregoing description, and it will be apparent that various changes may be made in the form, construction, and arrangement of the parts without departing from the spirit and scope of the invention or sacrificing all of its material advantages, the form hereinbefore described being merely a preferred embodiment thereof.

We claim:

1. In a progressive punch press tool; a plurality of pattern dies, pattern punches corresponding thereto, a plurality of blanking dies, means for feeding a plurality of pieces of stock to said dies, a rotatable loader, loader pins for said loader, there being one pin for each blanking die, said pins being aligned with and arranged to enter the blanking dies and receive thereon

stamped members as they are blanked from said stock, means for moving the loader pins into the blanking dies and withdrawing them therefrom, and means for rotating the loader to position the loader pins in alignment with different blanking dies than those last aligned with when the loader pins are withdrawn from said blanking dies.

2. The invention defined in claim 1, wherein the loader is adapted to be removable when the loader pins are withdrawn from the blanking dies.

3. In a progressive punch press tool; a set of dies for forming and blanking a pair of identical stampings, correponding punches for said dies, a second set of dies and corresponding punches therefor for forming and blanking a pair of identical stampings of a type different from the first mentioned stampings, means for feeding a strip of stock to each set of dies; a rotatable loader comprising a loader plate, and a pair of loader pins fixed to the loader plate on each side of the axis thereof, means for moving the loader toward and away from the dies, and means for intermittently rotating the loader 180°, each pair of loader pins being disposed in alignment alternatively with one pair of dies and then the other at the end of each rotative movement of the loader.

4. In a punch press tool, an assembling mechanism for stacking stampings including a loader, means for intermittently rotating said loader limited amounts, means for reciprocating the loader, and yielding means interposed between the loader and the means for reciprocating same.

5. The invention defined in claim 3, wherein the loader is adapted to impinge against a fixed member of the tool to limit reciprocating movement in one direction; said fixed member having guide openings therein, and guide pins on the loader adapted to be received in said openings when the loader is moved against said fixed member.

6. In a punch press tool, an assembling mechanism for stacking filter stampings including a rotatable loader, means for intermittently rotating said loader predetermined amounts, and means for reciprocating the loader.

7. In a punch press tool, an assembling mechanism for stacking filter stampings including a rotatable loader, means for effecting intermittent rotating movements of said loader, said movements being of limited predetermined increments, and means for reciprocating the loader alternately with respect to the intermittent rotating movements thereof.

8. The invention defined by claim 7 wherein the punch press tool has a die and the loader is reciprocated toward and away from said die.

9. In a progressive punch press tool: a set of staggered dies and punches for forming and blanking a plurality of identical stampings, a second set of staggered dies and punches for forming and blanking a plurality of identical stampings of a type different from the first mentioned stampings, means for feeding a strip of stock to each set of dies, a rotatable loader comprising a loader plate and a set of loader pins fixed to the loader plate on each side of the axis thereof, each set of loader pins being staggered in accordance with the staggering of the respective dies, means for intermittently rotating the loader, each set of loader pins being disposed in alignment alternately with the respective dies of one set and then the other at the end of each rotative movement of the loader, and means for reciprocating the loader toward and away from the dies.

10. In a punch press tool: dies and punches for forming and simultaneously blanking a plurality of stampings from strip stock, means for feeding strip stock to said dies, a rotatable loader, loader pins on said loader for reception of blanked stampings, means for intermittently rotating said loader to bring the loader pins into alignment with respective blanking dies, means for reciprocating the loader at the end of each rotative movement whereby the pins enter the respective blanking dies, means for limiting the reciprocating movement of the loader toward the dies whereby the free ends of said pins are disposed closely adjacent to the stampings, means for positively aligning the pins with respect to the stampings for reception of the latter on the former, and resilient means interposed between the loader and the means for reciprocating same.

PARKER G. COX.
JAY T. BLACK.
GUY C. FRICKE.

CERTIFICATE OF CORRECTION.

Patent No. 2,319,766. May 18, 1943.

PARKER G. COX, ET AL.

It is hereby certified that error appears in the printed specification of the above numbered patent requiring correction as follows: Page 2, first column, line 38, for "pings" read --pins--; page 3, first column, line 63, for "Each" read --Ear--; and that the said Letters Patent should be read with this correction therein that the same may conform to the record of the case in the Patent Office.

Signed and sealed this 27th day of July, A. D. 1943.

Henry Van Arsdale,
Acting Commissioner of Patents.

(Seal)